NOAA WIND PROFILER

GUIDE TO LRU REPLACEMENT
For 449 MHz Systems

January 1, 2000

Prepared by
Office of Oceanic and Atmospheric Research
Forecast Systems Laboratory
Profiler Program Office
Boulder, Colorado

Document: 1203-SM-35
Version 5.0

NOTICE

Mention of a commercial company or product does not constitute an endorsement by NOAA/FSL. Use for publicity or advertising purposes, of information from this publication or concerning proprietary products or the test of such products, is not authorized.

THIS PAGE INTENTIONALLY LEFT BLANK

Contents

1 Introduction 1-1
1.1 Purpose. 1-2
1.2 NPN Field Maintenance Cycle. 1-3

2 Shelter and Power Interfaces 2-1
2.1 Shelter Layout 2-1
2.2 Shelter AC Power. 2-6
2.2.1 Remote Control Main Breaker 2-10
2.2.1.1 Remote Operation 2-12
2.2.1.1.1 Establishing Connection 2-12
2.2.1.1.2 Retrieving Information from the Input or Outputs 2-16
2.2.1.1.3 Switching a Particular Output ON or OFF. 2-16
2.2.1.1.4 Remote Breaker Reset Procedure 2-16
2.2.1.2 Local Operation 2-17
2.2.1.2.1 Local Breaker Reset Procedure 2-18
2.3 Standard Power Down Sequence. 2-19
2.4 Standard Power Up Sequence 2-19
2.4.1 Profiler Boot-up Sequence 2-20
2.5 Voltage Suppression Devices. 2-21
2.5.1 Stage 1 Voltage Suppressor Replacement Procedure 2-22
2.5.2 Stage 2 Voltage Suppressor Replacement Procedure 2-22
2.5.3 Stage 3 Voltage Suppressor Replacement Procedure 2-25

3 Environmental Monitoring and Control 3-1
3.1 Temperature Monitoring and Control 3-2
3.1.1 Temperature Sensors and Meters 3-4
3.1.2 Shelter Heat Sensor 3-5
3.1.3 Environmental Control System Test 3-6
3.1.4 System Status Monitor Relay Driver Circuit 3-7
3.1.5 Environmental Control Relays 3-7
3.1.5.1 Air Conditioner Control Relays. 3-8
3.1.5.2 Exhaust Fan and Louvers Motor Relay 3-13
3.1.5.3 Main Breaker Trip Control Relay 3-15
3.1.6 Exhaust Fan Temperature Controller 3-16
3.2 Louver Assemblies 3-19
3.2.1 Common Failures of Louver Assemblies 3-22
3.2.2 Louver Assembly Repair Procedures 3-22
3.3 Environmental Control Units (ECU) 3-24

3.3.1 Replacement Procedure 3-24
3.3.2 Hard-Start Kit Installation Procedure 3-25
3.4 Smoke Detectors 3-29
3.5 Flooding Sensor. 3-30
3.6 Shelter and Antenna Field Access Alarms 3-31
3.6.1 Access Alarm Reporting 3-31
3.6.2 Effects of Access Alarms 3-32
3.6.3 Resetting Access Alarms 3-32

4 Equipment Cabinet 4-1
4.1 RF Generator 4-1
4.2 Forward Power Sensor 4-5
4.2.1 Forward Power Sensor Replacement Procedure 4-5
4.2.2 Forward Power Sensor Calibration. 4-6
4.3 Diode Detectors 4-12
4.3.1 Diode Detector Replacement Procedure 4-12
4.3.2 Diode Detector Calibration 4-14
4.4 Data Processor. 4-15
4.4.1 Data Processor Firmware Versions 4-16
4.4.2 Data Processor Replacement. 4-18
4.4.3 8-Line RS-232 Interface Card Replacement. 4-23
4.4.4 Erasable Programmable Read-Only Memory Card Replacement 4-25
4.5 Signal Processor 4-26
4.6 System Status Monitor 4-29
4.6.1 Intel Single Board Computer (SBC) 4-29
4.6.2 Analog Interface Board 4-33
4.6.3 Digital Interface Board 4-33
4.6.4 System Status Monitor Replacement Procedure 4-33
4.6.5 System Status Monitor Calibration Procedure 4-43
4.6.6 System Status Monitor EEPROM Replacement Procedure 4-45
4.7 Power Supplies 4-47
4.7.1 Power Supply Fault Isolation 4-47
4.7.2 Power Supply #1 Replacement Procedures 4-53
4.7.2.1 Replacement of Subsidiary Power Supplies 4-53
4.7.2.2 Replacement of the Entire Power Supply #1 Unit 4-53
4.7.3 Power Supply #2 Replacement Procedures 4-54
4.7.3.1 Replacement of Subsidiary Power Supplies 4-54
4.7.3.2 Replacement of the Entire Power Supply #2 Unit 4-55

5 Beam Steering Unit Cabinet 5-1
5.1 Type 2 449 MHz Receiver Assembly 5-1
5.1.1 Type 2 Receiver Replacement Procedure 5-1
5.1.2 Type 2 Receiver Noise Measurement. 5-5

5.1.3 Type 2 Receiver Gain Adjustment. 5-6
5.1.4 Type 2 Receiver STC Alignment Procedure 5-8
5.2 Limiter 5-13
5.3 Transmit/Receive Switch. 5-14
5.4 Circulator 5-15
5.4.1 Circulator Replacement Procedure. 5-16
5.4.2 Circulator Port 3 Power Levels Test Procedure 5-18
5.5 Directional Coupler 5-21
5.6 5-Way Power Divider 5-23
5.7 Reflected Power Sensor 5-25
5.7.1 Reflected Power Sensor Replacement Procedure 5-25
5.7.2 Reflected Power Sensor Calibration Procedure 5-26
5.8 Type 3 449 MHz Beam Steering Unit (BSU) Switch Assembly 5-32
5.8.1 Coaxial Switch Assemblies. 5-34
5.8.2 BSU Coaxial Switch Fault Isolation. 5-36
5.8.3 BSU Coaxial Switch Replacement Procedure 5-39
5.8.4 Type 3 449 MHz BSU Switch Assembly Replacement Procedure 5-40

6 449 MHz Power Amplifier Cabinet 6-1
6.1 Power Amplifier Cabinet Interfaces 6-10
6.1.1 Timing and Control Interface (TCI) 6-10
6.1.2 RS-232 Serial Communications Interface. 6-12
6.2 Serial Control/Monitor Interface (SCMI). 6-13
6.2.1 SCMI Front Panel Indicators and Controls 6-14
6.2.2 SCMI Assembly Replacement Procedure. 6-18
6.2.3 SCMI Internal Component Layout & Interconnection Diagrams 6-20
6.2.4 Serial Communications Command Protocol 6-24
6.3 Driver Input Control Assembly 6-32
6.3.1 Replacement Procedure 6-34
6.4 Driver Output Control Assembly 6-35
6.4.1 Replacement Procedure 6-35
6.5 Driver Amplifier Assemblies 6-38
6.5.1 Driver A Replacement Procedure 6-38
6.5.2 Driver B Replacement Procedure 6-40
6.6 High Power Amplifier (HPA) Modules 6-41
6.6.1 HPA 1 - 5 Replacement Procedures. 6-42
6.6.2 HPA 6 -10 Replacement Procedures 6-43
6.7 Band Pass Filter Assembly. 6-44
6.7.1 Replacement Procedure 6-44
6.8 Attenuator Assemblies 6-45
6.8.1 One dB Attenuators 6-45
6.8.2 Two dB Attenuator 6-45
6.9 Two-Way Power Divider 6-46
6.10 5-Way Power Dividers 6-46

6.10.1 HY2 Replacement Procedure 6-47
6.10.2 HY3 Replacement Procedure 6-48
6.11 42 VDC Power Supplies. 6-49
6.11.1 Replacement Procedure 6-50
6.12 15 VDC Power Supplies. 6-51
6.12.1 Replacement Procedure 6-51
6.13 Voltage Monitor Assembly 6-52
6.13.1 Replacement Procedure 6-52
6.14 Cooling Fan Assemblies 6-54
6.14.1 Intake Fan Assembly (B1-B3) Replacement Procedure 6-55
6.14.2 Exhaust Fan Assembly (B4-B6) Replacement Procedure 6-57
6.15 Temperature Monitoring 6-58
6.15.1 Fan Assembly Monitoring 6-58
6.15.1.1 Switch Vane S1-S3 Replacement Procedure 6-60
6.15.1.2 Switch Vane S4-S6 Replacement Procedure 6-61
6.15.2 Cabinet Temperature Monitoring 6-61
6.15.2.1 Intake Sensor (A7) Replacement Procedure 6-62
6.15.2.2 Exhaust Sensor (A8) Replacement Procedure 6-63
6.16 Power Amplifier Output RF Power Monitoring 6-63
6.16.1 Dual Directional Coupler 6-63
6.16.1.1 Replacement Procedure 6-64
6.16.2 RF Detector Assembly 6-65
6.16.2.1 Replacement Procedure 6-67
6.16.3 10-Way Power Combiner 6-67
6.16.3.1 Replacement Procedure 6-68
6.17 Power Amplifier Performance Checks and Alignment Procedures 6-68
6.17.1 Power Amplifier Performance Checks 6-69
6.17.1.1 Typical SCMI Display Readings with all HPA Modules Disabled. 6-69
6.17.1.2 Typical SCMI Display Readings with all HPA Modules Enabled 6-70
6.17.2 Power Amplifier Alignment Procedures 6-72
6.17.2.1 Driver Input Control Assembly Alignment 6-73
6.17.2.2 Driver Amplifier Alignment 6-75
6.17.2.3 Driver Control Output Assembly Alignment 6-76
6.17.2.4 HPA Module Alignment 6-78
6.17.2.5 Transmitter Output Detector Alignment 6-79
6.18 Power Amplifier Specifications 6-84
6.19 Power Amplifier Wire-Run List 6-87

7 449 MHz Antenna 7-1
7.1 Theory Of Operation 7-2
7.2 Physical Description 7-4
7.2.1 Antenna System Physical Layout 7-5
7.2.1.1 I-Beam Framework 7-5
7.2.1.2 Ground Plane. 7-5

7.2.1.3 Antenna System Co-Co Array Layout 7-5
7.2.1.4 Dual Co-Co Array Feed Network 7-6
7.2.1.5 Co-axial Co-linear Antenna Element Assemblies (Sticks) 7-7
7.2.1.6 Two-to-One Power Divider. 7-10
7.2.1.7 Three-to-One Power Divider 7-10
7.2.1.8 Four-to-One Divider 7-10
7.2.1.9 Five-to-One Power Divider. 7-11
7.2.1.10 Array Feed Cables 7-12
7.2.1.11 Distribution Feed Cables 7-12
7.2.1.12 Row distribution feed cables 7-12
7.2.1.13 Waterproofing Cable Connections 7-14
7.2.2 Beam Steering Unit (3-beam) 7-14
7.2.2.1 Beam Steering Unit (5-beam) 7-14
7.2.2.2 Phase Delay Cables 7-16
7.2.2.3 Power Feed Cables 7-18
7.2.2.4 Extension Cables 7-18
7.3 Operations 7-18
7.3.1 Beam Switching Command Signals and Status Signals. 7-18
7.3.2 Resulting Beam (3 and 5-beam system). 7-19
7.3.3 Phase Scan Technique. 7-20
7.3.4 System Monitoring 7-20
7.4 Antenna Performance Measurement Techniques 7-22
7.4.1 Antenna Feed Cable Return Loss Test. 7-24
7.4.2 Advanced Antenna Performance Measurements 7-27
7.4.2.1 Antenna VSWR Measurement. 7-27
7.4.2.2 Beam Steering Unit VSWR Measurement 7-27
7.4.2.3 Array Feed Cable VSWR Measurement 7-32
7.4.2.4 Power Divider Measurement 7-33
7.4.2.5 Distribution Feed Cable Measurement 7-34
7.4.2.6 Co-axial Co-linear Assembly (stick) Measurement 7-35
7.5 Antenna LRU Replacement Procedures 7-36
7.5.1 Five-Way Power Divider Replacement 7-36
7.5.2 Beam Steering Unit Replacement. 7-36
7.5.3 Beam Steering Unit Switches Replacement 7-38
7.5.4 Antenna Cable Replacement 7-38
7.5.5 Power Dividers Replacement 7-39
7.5.6 Co-Axial Co-Linear Assemblies (sticks) Replacement. 7-39
7.6 Cable and Wiring Lists 7-39
7.7 Acronyms 7-58

8 Profiler Communications 8-1
8.1 Landline Communications System 8-1
8.1.1 Model 3610 Digital Data Service Unit (DSU) 8-2
8.1.2 Model 3920 Analog Data Service Unit (DSU) 8-5

8.2 GOES Communications System. 8-7
8.2.1 GOES Assembly Replacement. 8-10
8.2.2 GOES Assembly Master Control Module Initialization 8-12
8.2.3 GOES Coaxial Surge Suppressor Replacement 8-12
8.2.4 GOES Antenna Replacement. 8-14

9 Radio Acoustic Sounding System (RASS) 9-1

10 GPS Surface Observing System (GSOS). 10-1
10.1 System Description 10-2
10.1.1 Payload. 10-4
10.1.1.1 Controller Assembly. 10-6
10.1.1.2 Barometric Pressure Sensor-Transmitter Assembly 10-8
10.1.1.3 Temperature/Relative Humidity Sensor-Transmitter Assembly. 10-9
10.1.1.4 Surge Suppressor Assembly 10-9
10.1.2 Mounting Assembly and Fold-Down Arm 10-11
10.1.3 Power Supply and Communications Interface Assembly 10-12
10.2 Operations 10-14
10.2.1 GSOS Setup Port 10-15
10.2.2 GSOS Data Port 10-16
10.2.2.1 Configuring the Data Processor to interface with GSOS 10-16
10.2.2.2 Verifying the Data Processor is receiving data from GSOS. 10-18
10.2.3 GSOS Command Syntax 10-20
10.2.3.1 GSOS Command Prompt 10-20
10.2.3.2 Query Commands 10-20
10.2.3.3 Configuration Commands 10-23
10.3 Replacement Procedures 10-26
10.3.1 Payload Replacement. 10-26
10.3.2 Controller Replacement 10-29
10.3.3 Barometric Pressure Sensor Replacement. 10-29
10.3.4 Temperature/RH Sensor Replacement. 10-30

11 GPS-IPW Observing System. 11-1
11.1 System Description 11-1
11.1.1 Electronics Assembly 11-1
11.1.1.1 Receiver Assembly 11-3
11.1.1.2 +15 VDC Power Supply Assembly 11-4
11.1.1.3 Uninterruptible Power Supply (UPS) Assembly. 11-4
11.1.2 Antenna Assembly 11-6
11.1.2.1 Dual Frequency Antenna Assembly. 11-6
11.1.2.2 Antenna Mount Assembly 11-6
11.1.2.3 Antenna Radome Assembly 11-7
11.1.3 System Cabling and Communication Interfaces. 11-7

11.2 Operations 11-10
11.2.1 Determining Receiver & Antenna Health and Status 11-10
11.2.2 Starting Survey 11-12
11.2.3 Ending Survey. 11-12
11.2.4 GPS Receiver Re-initialization (Hard Reset) 11-12
11.2.5 Configuring Communications Parameters 11-14
11.2.6 Configuring Survey Parameters 11-15
11.2.7 Upgrading the GPS Receiver Firmware 11-16
11.3 GPS-IPW System Troubleshooting 11-19
11.3.1 Isolating Faulty Antenna or Receiver 11-19
11.3.2 Power Supply Troubleshooting. 11-20
11.3.3 Communications Troubleshooting 11-20
11.4 Replacement Procedures 11-22
11.4.1 GPS Receiver Replacement. 11-22
11.4.2 GPS Antenna Replacement 11-23
11.4.2.1 Replacing GPS Antennas with Radomes 11-23
11.4.2.2 Replacing GPS Antennas without Radomes 11-24
11.4.3 GPS Antenna Cable Replacement 11-25
11.4.4 Power Supply Replacement 11-26
11.4.5 UPS Replacement 11-28
11.5 Preventive Maintenance 11-29
11.5.1 Antenna Inspection. 11-29
11.5.2 UPS Functional Test. 11-29

APPENDIX A System Cabling Diagrams. A-1

APPENDIX B Site Visit Checklist. B-1

APPENDIX C Acronyms and Abbreviations C-1

List of Figures

1-1 NOAA Profiler Site Locations. 1-1
1-2 Alaskan 449 MHz Profiler Network 1-2
1-3 NOAA Profiler System Block Diagram. 1-3
1-4 NOAA Profiler Network Data Distribution 1-4

2-1 Wind Profiler Shelter 2-1
2-2 Shelter Layout Side 1 2-2
2-3 Profiler Shelter Side 2 2-2
2-4 Shelter Layout Side 3 2-3
2-5 Shelter Layout Side 4 2-4
2-6 Shelter Layout Top View 2-5
2-7 Shelter AC Power and Surge Protection 2-6
2-8 AC Power and Shelter Grounding 2-6
2-9 Shelter Circuit Breaker Panel Layout. 2-7
2-10 Shelter AC Power Distribution Schematic 2-9
2-11 Remote Control Main Breaker 2-10
2-12 Remote Control Main Breaker Internal View 2-10
2-13 Remote Control Breaker Box Internal Components 2-11
2-14 Remote Control Breaker Box Wiring Diagram. 2-12
2-15 Velleman K6501 Controller Circuit Diagram 2-13
2-16 Velleman K6501 Controller Component Layout 2-14
2-17 Velleman K6501 Controller Wiring Harness 2-15
2-18 Velleman K6501 Controller LED Indicators and Switch Locations 2-17
2-19 AC Power Voltage Suppression Schematic Diagram 2-21
2-20 Typical Profiler Site AC Power Service Disconnect. 2-22
2-21 Shelter Circuit Breaker Panel Internal Layout 2-24
2-22 LEVITON Surge Suppressor Enclosure 2-26

3-1 System Status Monitor Environmental Interfaces 3-1
3-2 Shelter Temperature Control Algorithm Flow Chart. 3-3
3-3 Inside/Outside Temperature Sensor Connections. 3-4
3-4 Shelter Heat Sensor 3-5
3-5 Shelter Heat Sensor Wiring Terminations 3-6
3-6 System Status Monitor Replay Driver Circuit. 3-8
3-7 Solid State Relay Control Signal Wiring 3-9
3-8 Air Conditioner Control Box Schematic Diagram. 3-10
3-9 Air Conditioner Control Box Wiring Diagram 3-11
3-10 Air Conditioner Control Box Mechanical Assembly Diagram. 3-12
3-11 Exhaust Fan/Louver Control System Schematic Diagram. 3-14
3-12 Exhaust Fan/Louver Control Box Wiring Diagram. 3-15
3-13 Main Breaker Trip Replay Circuit Schematic Diagram 3-17
3-14 Exhaust Fan Temperature Control Unit. 3-18

3-15 Exhaust Fan Control Unit Wiring Diagram 3-18
3-16 Typical Shelter Louver and Actuator Assembly 3-20
3-17 Intake Louver Assembly 3-21
3-18 Exhaust Fan. 3-21
3-19 Louver Motor Assembly (both Intake and Exhaust) 3-21
3-20 ECU with Front Cover Panel and Air Filter Removed 3-26
3-21 ECU Cover Plate Removed to access the Starting Capacitor 3-27
3-22 ECU Hard-Start Kit Wiring Diagram. 3-27
3-23 Mounting the Hard-Start Kit Inside the ECU 3-28
3-24 Shelter Smoke Detector. 3-29
3-25 Shelter Smoke Detector Schematic Wiring Diagram 3-30
3-26 Flood Sensor Schematic Wiring Diagram 3-30
3-27 Access Alarm Schematic Wiring Diagram 3-31

4-1 Equipment Cabinet Front Panel View 4-2
4-2 Equipment Cabinet Rear Panel View 4-3
4-3 RF Generator Rear Panel 4-4
4-4 Forward Power Sensor Calibration Test Equipment Setup 4-8
4-5 20 us Peak Power Pulse in High Mode 4-9
4-6 3.33 us Peak Power Pulse in Low Mode 4-10
4-7 Status Monitor Analog Interface Board Component Layout 4-11
4-8 Forward Power Sensor Adjustment Potentiometer 4-12
4-9 Diode Detector Replacement. 4-13
4-10 RF Generator Detector Diodes 4-13
4-11 Data Processor Location 4-15
4-12 Version 8.2 Data Processor EPROM Board Configuration 4-17
4-13 Version 9.0 Data Processor EPROM Board Configuration 4-17
4-14 Data Processor Rear Panel and Cable Connections. 4-19
4-15 Data Processor Card Cage Layout 4-20
4-16 Data Processor Rear Panel Switch Settings 4-21
4-17 Model DHV-11 8-Port RS-232 Interface Card 4-24
4-18 Model DHQ-11 8-Port RS-232 Interface Card 4-25
4-19 Signal Processor Location 4-26
4-20 Signal Processor Internal Component Layout 4-27
4-21 Signal Processor Rear Panel and Cable Connections 4-28
4-22 Status Monitor Location 4-29
4-23 Status Monitor Internal Component Layout 4-30
4-24 Status Monitor Interface Diagram 4-31
4-25 Intel Single Board Computer (SBC) Component Layout 4-32
4-26 Analog Interface Board Component Layout. 4-34
4-27 Analog Interface Board Schematic Diagram (1 of 2) 4-35
4-28 Analog Interface Board Schematic Diagram (2 of 2) 4-36
4-29 Digital Interface Board Component Layout 4-37
4-30 Digital Interface Board Schematic Diagram (1 of 4) 4-38

4-31 Digital Interface Board Schematic Diagram (2 of 4) 4-39
4-32 Digital Interface Board Schematic Diagram (3 of 4) 4-40
4-33 Digital Interface Board Schematic Diagram (4 of 4) 4-41
4-34 System Status Monitor Rear Panel and Cable Connections 4-42
4-35 Status Monitor EEPROM Chip Replacement 4-46
4-36 Equipment and BSU Cabinet DC Power Distribution 4-48
4-37 Power Supply #1 and #2 Front Panels 4-49
4-38 Power Supply #1 and #2 Rear Panels 4-50
4-39 Power Supply #1 Internal Component Layout 4-51
4-40 Power Supply #2 Internal Component Layout 4-52

5-1 Beam Steering Unit (BSU) Cabinet Front Panel 5-2
5-2 Beam Steering Unit (BSU) Cabinet Internal Component Layout 5-3
5-3 Type 2 Receiver Rear Panel 5-4
5-4 Profiler Maintenance Terminal Status Data Block Screen 5-6
5-5 Type 2 Receiver Gain Adjustment 5-7
5-6 Receiver STC Alignment Test Equipment Setup 5-9
5-7 STC Waveforms During the Low Mode, Rising Edge Trigger. 5-11
5-8 STC Waveforms During the Low Mode, Falling Edge Trigger. 5-11
5-9 Limiter Replacement 5-13
5-10 Transmit/Receive (T/R) Switch Replacement 5-15
5-11 Circulator Replacement 5-16
5-12 Circulator Port 3 Power Test Equipment Setup 5-19
5-13 Directional Coupler Replacement 5-22
5-14 5-Way Power Divider Replacement 5-24
5-15 Reflected Peak Power Sensor Replacement. 5-26
5-16 Reflected Power Measurement Test Equipment Setup 5-28
5-17 20 us Peak Power Pulse in High Mode 5-29
5-18 3.33 us Peak Power Pulse in Low Mode 5-30
5-19 System Status Monitor Analog Interface Board 5-31
5-20 Reflected Power Sensor Calibration Adjustment Pot 5-31
5-21 Beam Steering Network Diagram 5-33
5-22 Type 3 BSU Switch Assembly Front Panel 5-33
5-23 Type 3 BSU Switch Assembly Internal Component Layout 5-34
5-24 BSU Coaxial Switch Assembly Schematic Diagram 5-35
5-25 BSU Coaxial Switch Signal Routing 5-36
5-26 PMT Doppler Test Setup Menu 5-37
5-27 BSU Switch Return Loss Test Equipment Setup 5-38
5-28 Anritsu Site Master Return Loss Display 5-39
5-29 BSU Switch Assembly Rear Panel 5-41

6-1 Power Amplifier Cabinet Front Panel. 6-1
6-2 PA Cabinet Front View 6-2
6-3 PA Cabinet Left Side View. 6-3

6-4 PA Cabinet Right Side View 6-4
6-5 PA Cabinet Rear View 6-5
6-6 PA Cabinet Top View. 6-6
6-7 Power Amplifier Assembly Functional Block Diagram 6-7
6-8 RF Amplification Stage Block/Wiring Diagram (1 of 2) 6-7
6-9 RF Amplification Stage Block/Wiring Diagram (2 of 2) 6-8
6-10 Power Amplifier Power Distribution & Cooling Diagram 6-9
6-11 Power Amplifier Cabinet Interface Connectors 6-10
6-12 TCI Interface Specifications. 6-11
6-13 Serial Communications Port Configuration 6-12
6-14 Serial Control/Monitoring Interface (SCMI) Front Panel 6-13
6-15 SCMI Mode and Fault Indicator LEDs 6-15
6-16 SCMI Front Panel Display and Controls 6-16
6-17 SCMI Rear Panel. 6-19
6-18 SCMI Rear Panel Cable Connections 6-20
6-19 SCMI Internal Component Layout 6-21
6-20 SCMI Internal Interconnection Diagram. 6-22
6-21 SCMI Interface Diagram 6-23
6-22 Driver Input Control Assembly. 6-32
6-23 Driver Input Control Assembly Internal Component Layout. 6-33
6-24 Driver Input Control Assembly Schematic Diagram. 6-34
6-25 Driver Output Control Assembly 6-35
6-26 Driver Output Control Assembly Internal Component Layout 6-36
6-27 Driver Output Control Assembly Schematic Diagram 6-37
6-28 Driver Assembly Locations 6-38
6-29 Driver Module Assembly 6-38
6-30 Driver Module Assembly Block Diagram 6-39
6-31 HPA Module Location 6-41
6-32 Bottom View HPA Module 6-41
6-33 Top View of HPA Module. 6-41
6-34 Typical HPA Module 6-41
6-35 HPA Module Block Diagram 6-42
6-36 Band Pass Filter Assembly 6-44
6-37 1-dB Attenuators 6-45
6-38 2-dB/100 Watt Attenuator 6-45
6-39 2-Way Power Divider. 6-46
6-40 5-Way Power Divider HY2. 6-46
6-41 5-Way Power Divider HY3. 6-46
6-42 5-Way Power Divider Block/Schematic Diagram. 6-47
6-43 42 VDC Power Supply Locations. 6-49
6-44 42 VDC Power Supply Connector Specifications 6-49
6-45 42 VDC Power Supply Removal / Replacement 6-50
6-46 PS5 & PS6 Locations 6-51
6-47 Voltage Monitor Assembly. 6-52

6-48 Voltage Monitor Assembly Internal Component Layout. 6-53
6-49 Voltage Monitor Assembly Schematic Diagram. 6-54
6-50 Intake Fans (B1-B3). 6-55
6-51 Exhaust Fans (B4-B6) 6-55
6-52 Intake Fan Replacement 6-56
6-53 Fan B4-B6 Replacement 6-57
6-54 Modified Solid-state Switch Vane Assembly 6-58
6-55 Fan Intake Drawer, showing assemblies B1-B3, S1-S3, and A7. 6-59
6-56 Exhaust Fan and Temperature Monitoring Sensors, S4-S6 and A8 6-59
6-57 Intake Fan Drawer 6-60
6-58 Location of RF Detector and Dual Directional Coupler 6-64
6-59 RF Detector Assembly Component Layout 6-66
6-60 RF Detector Assembly Schematic Diagram 6-66
6-61 10-Way Power Combiner. 6-67
6-62 Driver Input Control Alignment Pot Locations 6-74
6-63 Driver Amplifier Assembly Alignment Pot Locations 6-76
6-64 Driver Output Control Alignment Pot Locations. 6-77
6-65 HPA Alignment Pots 6-78
6-66 Test Equipment Setup for Measuring Peak Output Power 6-80
6-67 20 us Peak Power Pulse in High Mode 6-81
6-68 3.33 us Peak Power Pulse in Low Mode 6-82
6-69 RF Detector Forward and Reflected Adjustment Pots. 6-83

7-1 Antenna Block Diagram. 7-3
7-2 449 MHz Co-Co Antenna Structure. 7-4
7-3 Antenna Construction and Mounting 7-6
7-4 Orthogonal Co-Co Antenna Array Layout 7-7
7-5 Lower (North) Antenna Array Configuration 7-8
7-6 Upper (East) Antenna Array Configuration 7-9
7-7 Co-axial Co-linear Antenna Element Assemblies (Sticks). 7-10
7-8 2:1, 3:1, and 4:1 Power Divider Assemblies 7-11
7-9 5-Way Power Divider. 7-11
7-10 Row Distribution Feed Cables. 7-13
7-11 Cold-Shrink Tubing Installation Procedure 7-15
7-12 Beam Steering Unit (BSU) Assembly 7-16
7-13 BSU Coaxial Switch Assembly 7-17
7-14 BSU Control Command Signals 7-18
7-15 BSU Status Signals 7-19
7-16 Phase Scan Technique 7-21
7-17 PMT System Status Data Block Display 7-22
7-18 Antenna Feed Cable Return Loss Measurement 7-25
7-19 Anritsu Site Master Return Loss Display. 7-26
7-20 Antenna VSWR Measurement. 7-29
7-21 BSU VSWR Measurement. 7-30

7-22 BSU Insertion Loss and Phase Measurement 7-31
7-23 Antenna Insertion Loss and Phase Measurement 7-32
7-24 5:1 Power Divider Insertion Loss and Phase Measurement 7-33
7-25 Antenna Element (Stick) Insertion Loss and Phase Measurement 7-35
7-26 Beam Steering Network (3-Beam Systems) 7-54
7-27 Beam Steering Network (5-Beam Systems) 7-55
7-28 Lower Array 1 (N, S, V) Antenna Cabling Diagram 7-56
7-29 Upper Array 2 (E, W) Antenna Cabling Diagram 7-57

8-1 Profiler Network Data Flow 8-1
8-2 Model 3610 Data Service Unit Front Panel 8-3
8-3 Model 3610 Data Service Unit Rear Panel 8-3
8-4 Communications System Interconnections Using a 3610 DSU 8-4
8-5 Model 3920 Data Service Unit Front Panel 8-5
8-6 Model 3920 Data Service Unit Rear Panel 8-6
8-7 Communications System Interconnections Using a 3920 DSU 8-7
8-8 GOES Assembly Front Panel 8-8
8-9 GOES Assembly Rear Panel Interconnections 8-10
8-10 PMT GOES Master Control Module (MCM) Menu 8-13
8-11 GOES Surge Suppressor Replacement 8-14

10-1 GSOS Payload Assembly 10-2
10-2 GSOS Block Diagram 10-3
10-3 GSOS Payload Electronics Assembly 10-4
10-4 GSOS Payload Wiring Schematic 10-5
10-5 GSOS Payload Interfaces 10-6
10-6 GSOS Controller Assembly Front View 10-7
10-7 GSOS Controller Assembly Rear View 10-7
10-8 Barometric Pressure Sensor-Transmitter Assembly 10-8
10-9 T/RH Sensor-Transmitter Assembly 10-9
10-10 Surge Suppressor Assembly 10-10
10-11 GSOS Mounting Assembly and Fold-Down Arm 10-11
10-12 GSOS Fold-Down Arm Assembly 10-12
10-13 GSOS Power Supply and Communications Interface Assembly 10-13
10-14 GSOS Power & Communications Interface Schematic Diagram 10-14
10-15 GSOS Setup Port (P1) Interface Cable Specifications 10-16
10-16 PMT Communications Parameters Menu 10-17
10-17 PMT - Landline Output - Radiometer Data 10-18
10-18 GSOS Setup Port (P1) Status Display and Help Menu 10-21
10-19 GSOS Data Port (P3) Status Display and Help Menu 10-21
10-20 Payload Interfaces 10-26
10-21 Lower Fold-Down Arm 10-26
10-22 T/RH Sensor Removal 10-27
10-23 Payload Stuffing Tube 10-27

10-24 Lower Fold-Down Arm 10-31
10-25 T/RH Sensor Removal 10-31
10-26 Payload Stuffing Tube 10-32

11-1 GPS Electronics Assembly 11-1
11-2 GPS Electronics Mechanical Assembly 11-2
11-3 Trimble GPS Receiver Front and Rear Panel Views 11-3
11-4 15 VDC Power Supply 11-4
11-5 UPS Assembly 11-5
11-6 Micro-Centered Antenna 11-6
11-7 GPS Antenna Mount Assembly 11-6
11-8 Antenna Radome 11-7
11-9 Radome Fasteners 11-7
11-10 GPS-IPW System Cabling Diagram 11-8
11-11 GPS Receiver Power Cable Specifications 11-9
11-12 GPS Receiver DCE Cable Specifications 11-9
11-13 GPS Receiver DTE Cable Specifications 11-10
11-14 GPS Receiver Front Panel Status Display 11-11
11-15 Notebook Computer Display During Update Process 11-18
11-16 GPS Receiver/Antenna Troubleshooting Flowchart 11-21
11-17 GPS Antenna Cable Routing Between Shelter and Antenna 11-25

A-1 System Cabling Diagram A-3
A-2 Cable W1 Wiring Diagram (Signal Processor to Receiver) A-4
A-3 Cable W2 Wiring Diagram (Signal Processor to Receiver) A-5
A-4 Cable W3 Wiring Diagram (Signal Processor to RF Generator) A-6
A-5 Cable W4 Wiring Diagram (Signal Processor to BSU) A-7
A-6 Cable W5 Wiring Diagram (BUS to T/R Switch) A-8
A-7 Cable W6 Wiring Diagram (PS # 2 to Signal Processor) A-9
A-8 Cable W7 Wiring Diagram (PS #2 to System Status Monitor) A-10
A-9 Cable W8 Wiring Diagram (PS #2 to Receiver) A-11
A-10 Cable W9 Wiring Diagram (PS #2 to RF Generator) A-12
A-11 Cable W10 Wiring Diagram (PS #2 to BSU) A-13
A-12 Cable W11 Wiring Diagram (PS #1 to PS #2) A-14
A-13 Cable W12 Wiring Diagram (AC Line Voltage for PS #1) A-15
A-14 Cable W13 Wiring Diagram (AC Line Voltage for PS #2) A-16
A-15 Cable W14 Wiring Diagram (SP and SSM to Transmitter) A-17
A-16 Cable W15 Wiring Diagram (Data Processor tot GOES MCM) A-18

List of Tables

2-1 Circuit Breaker Directory 2-7
2-2 Circuit Breaker Specifications 2-8

3-1 Shelter Temperature Control Algorithm 3-2

4-1 Data Processor Firmware Versions 4-16
4-2 Data Processor Hexadecimal Diagnostic Display 4-22

6-1 TCI HPA Module Control 6-11
6-2 SCMI Mode and Fault LED Indicator Descriptions 6-15
6-3 SCMI Front Panel Control Descriptions 6-16
6-4 SCMI Protocol Commands 6-25
6-5 RSS Command Response 6-26
6-6 Module Hexadecimal Addresses 6-29
6-7 RMP Command Response for Module Address 00-09 (HPA 1-10) 6-30
6-8 RMP Command Response for Module Address 0A-0B (RF Drivers A&B) . . . 6-30
6-9 RMP Command Response for Module Address 0C-0F (42 V PS 1-4) 6-31
6-10 RSM Command Response 6-31
6-11 Forward/Reflected Power Levels with all HPA Modules Disabled 6-70
6-12 Forward/Reflected Power Levels with all HPA Modules Enabled 6-71
6-13 RF and TCI Specifications 6-84
6-14 Mechanical Specifications 6-85
6-15 Interface Connector Specifications 6-85
6-16 Environmental Specifications 6-85
6-17 Power Requirements 6-86
6-18 Cabinet Wire-Run List 6-87

7-1 Antenna Performance Parameters 7-2
7-2 3-Beam BSU Assembly Phase Progression 7-19
7-3 5-Beam BSU Assembly Phase Progression 7-20
7-4 Test Equipment and Tools (or equivalent) 7-23
7-5 BSU Insertion Loss 7-28
7-6 Typical 449 MHz Antenna System Power Divider Values 7-34
7-7 Typical 449 MHz Antenna System Cable Values 7-35
7-8 3-Beam System Antenna Cable Run List 7-40
7-9 5-Beam System Antenna Cable Run List 7-45
7-10 Beam Steering Unit (3-beam) Pin-Out Listing 7-50
7-11 Beam Steering Unit (5-beam) Pin-Out Listing 7-52
7-12 449 MHz Antenna Array power Distribution (Relative to 1) 7-53
7-13 Acronyms 7-58

8-1 Profiler Site GOES Antenna Orientation Parameters 8-16

10-1 Hexadecimal to ASCII Conversion Chart. 10-19

1 Introduction

The National Oceanic and Atmospheric Administration (NOAA) Profiler Network (NPN) consists of 32 404 MHz Doppler radars located in the central United States, 3 449 MHz Doppler radars located in Alaska, and an engineering test bed at the National Reconditioning Center (NRC) in Kansas City, Missouri. Figure 1-1 is a map showing the locations of NPN profiler sites in the central US. Figure 1-2 is a map showing the locations of the Alaskan 449 MHz profiler sites. The central US profiler network completed deployment in 1992, and has been operating for eight years.

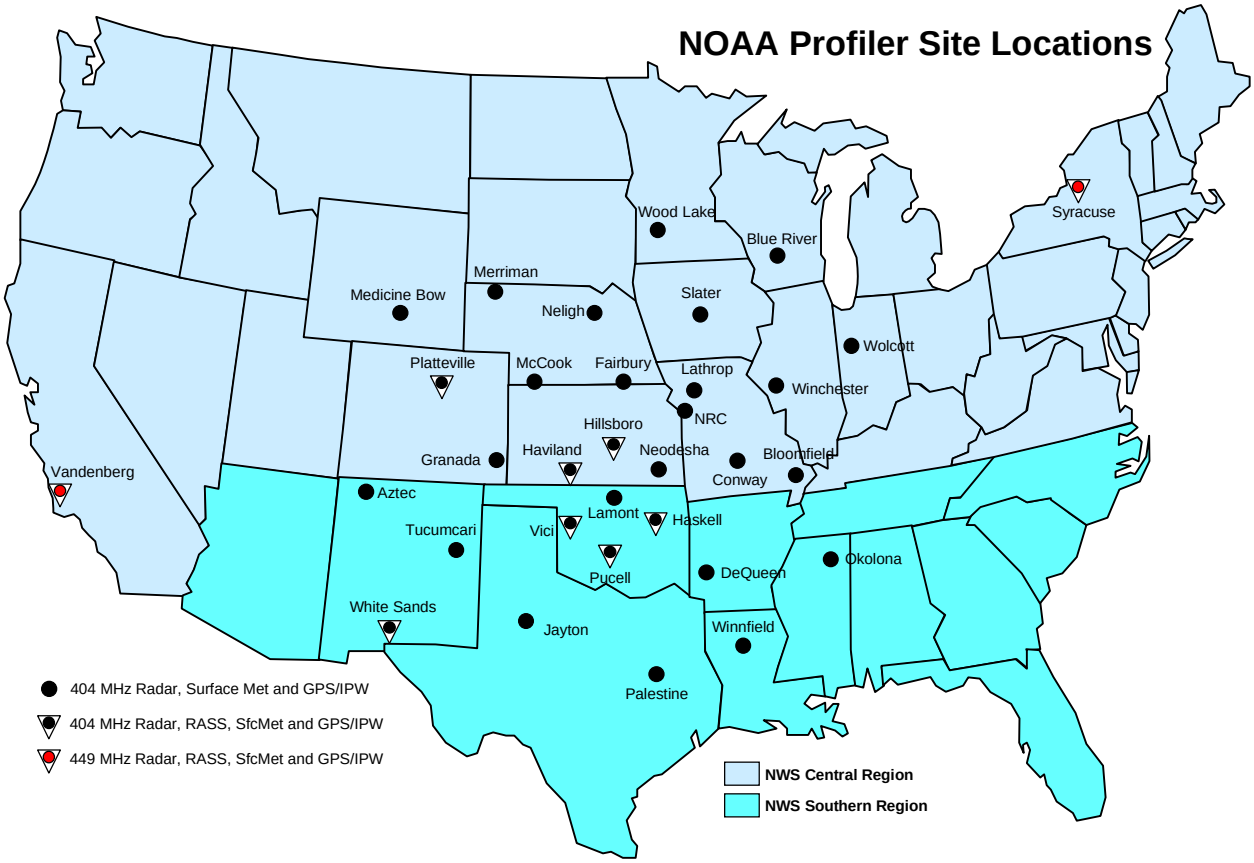

Figure 1-1 NOAA Profiler Site Locations

NPN profilers operate at a frequency of 404.37 MHz or 449.0 MHz and provide vertical profiles of atmospheric winds from altitudes of approximately 0.5 - 16.25 km. Wind measurements are made every six minutes and hourly averages are calculated. Figure 1-3 is a generalized block diagram of a NOAA wind profiler illustrating the major system components and their interfaces.

Data acquired by the wind profilers are transmitted to the Profiler Control Center (PCC) in Boulder, Colorado, for processing and quality control checks. As described in Figure 1-4, the PCC transmits raw or processed data to a variety of users, most notably the National Weather Service (NWS) via the National Weather Service Telecommunications Gateway (NWSTG).

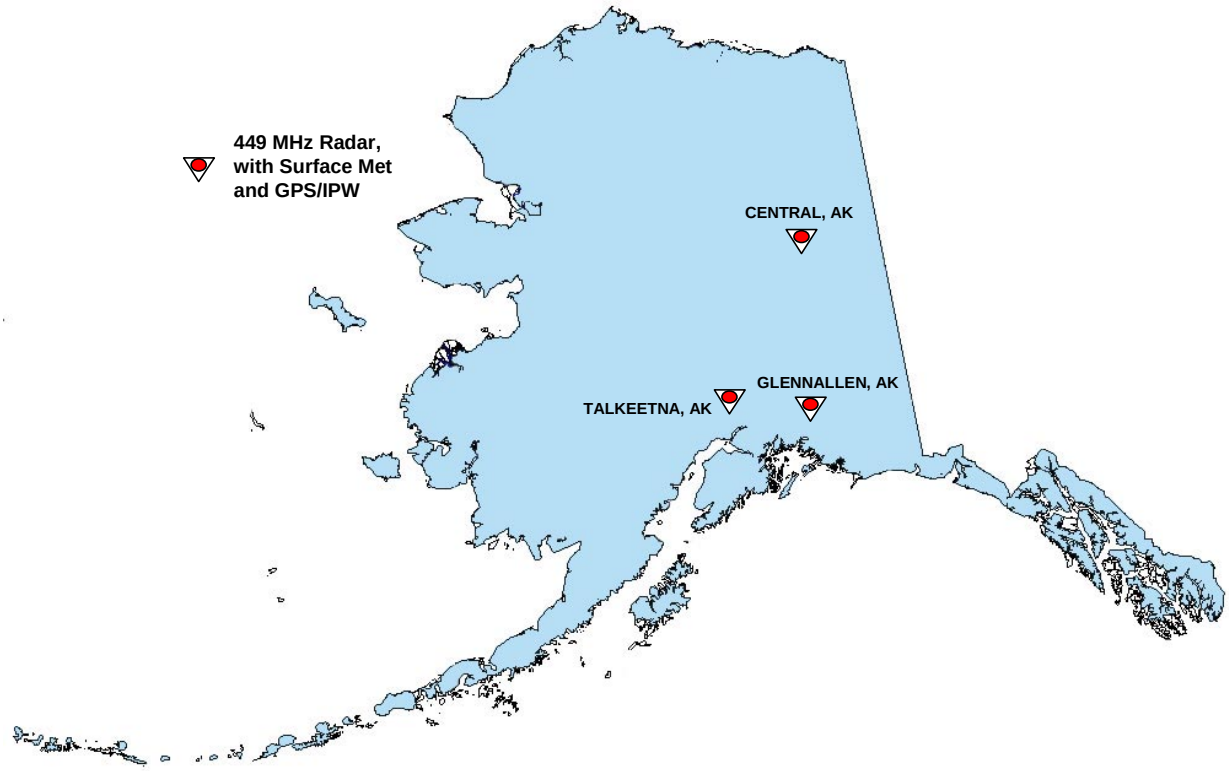

Figure 1-2 Alaskan 449 MHz Profiler Network

Under an agreement between NOAA's Environmental Research Laboratories (ERL) and NWS, dated March 1988, field maintenance of the WPDN is provided by NWS Electronics Technicians (El-Techs) and training and technical assistance in support of NWS maintenance activities is provided by the Profiler Program Office (PPO) in Boulder.

1.1 Purpose

The purpose of this manual is to provide NWS El-Techs and other field maintenance personnel with a comprehensive guide to the maintenance and repair of NPN radars. All NWS field personnel responsible for profiler maintenance should possess a copy of this manual, and one copy should be located at each profiler site.

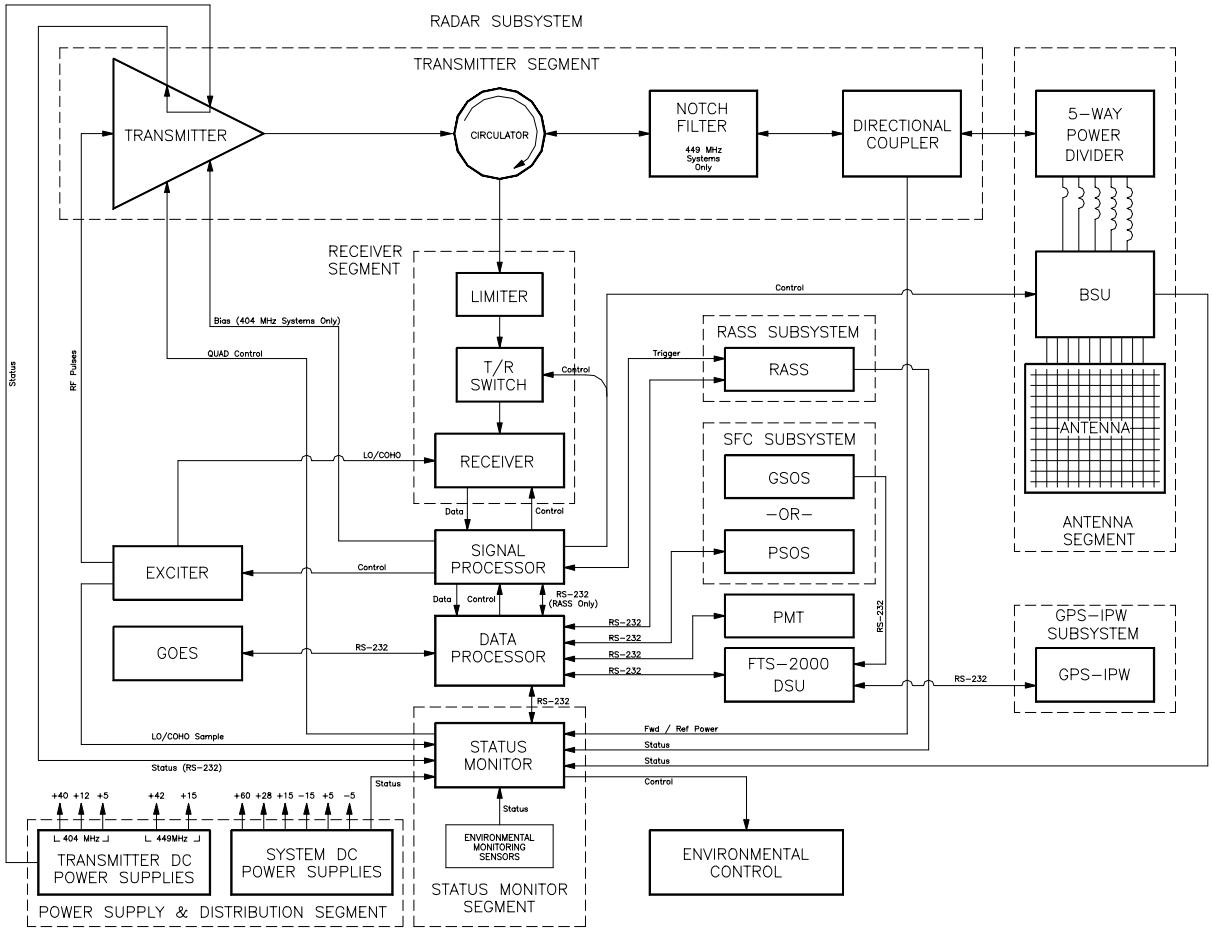

Figure 1-3 NOAA Profiler System Block Diagram

1.2 NPN Field Maintenance Cycle

Most field maintenance activities conducted by NWS El-Techs involve the removal and replacement of Line Replaceable Units (LRUs) or sub-LRU components. Approximately 100 items are stocked at the National Logistics and Support Center (NLSC) in Kansas City, Missouri, for NPN field maintenance activities.

The normal field maintenance cycle for an LRU replacement begins when the PCC observes an event using the remote diagnostic features of the NOAA Wind Profiler. Events diagnosed as faults are logged in a data base and the PCC staff contacts the designated maintenance personnel for each profiler site.

The PCC advises them of the failure and requests an NWS Equipment Maintenance Document (WS Form A-26) number for this event. PCC personnel contact the NLSC to request that an LRU be sent to the El-Tech at a designated location. The PCC then coordinates with the appropriate NWS maintenance person to schedule a site visit.

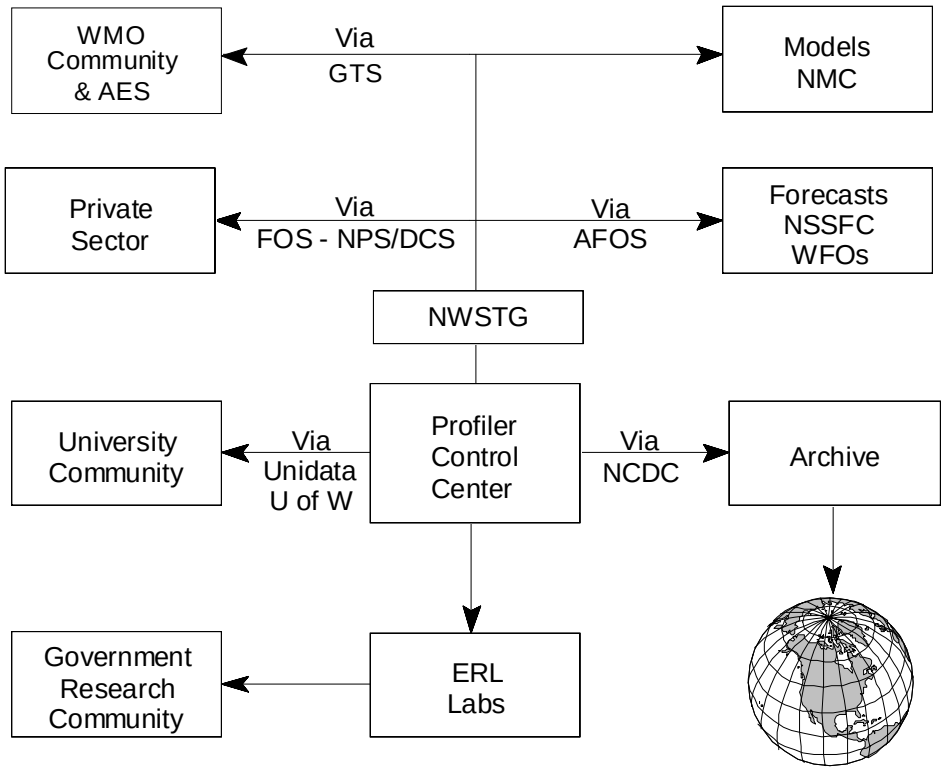

AES - Atmospheric Environment Service of Canada

Figure 1-4 NOAA Profiler Network Data Distribution

In most cases, repair of the profiler is a straightforward process. On occasion, however, the PCC is not able to determine the exact cause of a profiler failure using the remote diagnostics, and the maintenance person will be requested to assist in troubleshooting the problem. Under these circumstances, NWS field maintenance personnel will work closely with the PCC to diagnose the fault and take remedial action.

Some LRUs require calibration after installation, and when required, these procedures are included as part of the replacement procedures in the manual. If special equipment is required, it will be shipped to the El-Tech along with the LRU. The PCC will work with

NWS field maintenance personnel to assist in the calibration process and verify the results upon completion.

At the conclusion of the field maintenance activity, NWS El-Techs will return all damaged LRUs (repairable items only), calibration equipment, and unused shipped items to NRC according to standard NWS procedures, or to the PCC upon request.

THIS PAGE INTENTIONALLY LEFT BLANK

2 Shelter and Power Interfaces

This section focuses on the internal layout of the shelter, AC power distribution, and AC surge protection devices. Standard power-down and power-up procedures are outlined in Section 2.3, and profiler boot-up sequence is discussed in Section 2.4. AC power line surge protector replacement procedures are found in Section 2.5.

2.1 Shelter Layout

Figure 2-1 through Figure 2-6 provide views of the four shelter walls and ceiling, and identify the major components within the NOAA Wind Profiler Shelter Assembly.

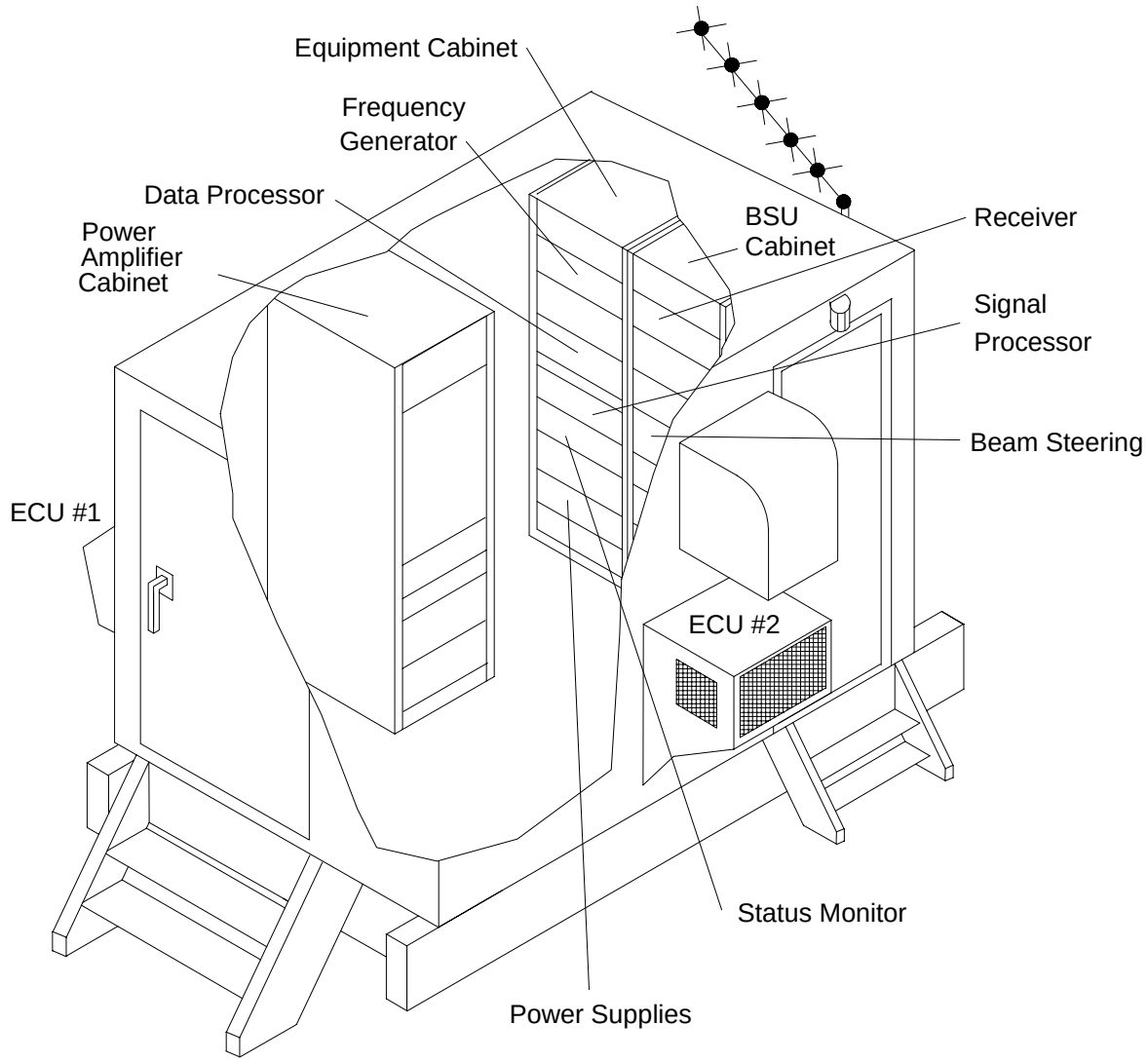

Figure 2-1 Wind Profiler Shelter

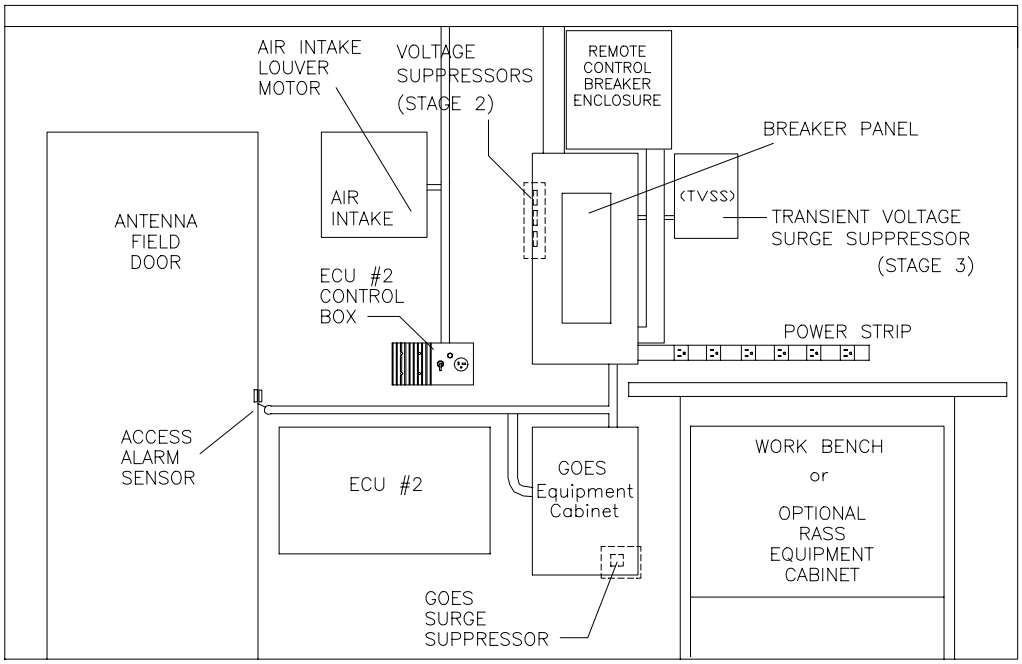

Figure 2-2 Shelter Layout Side 1

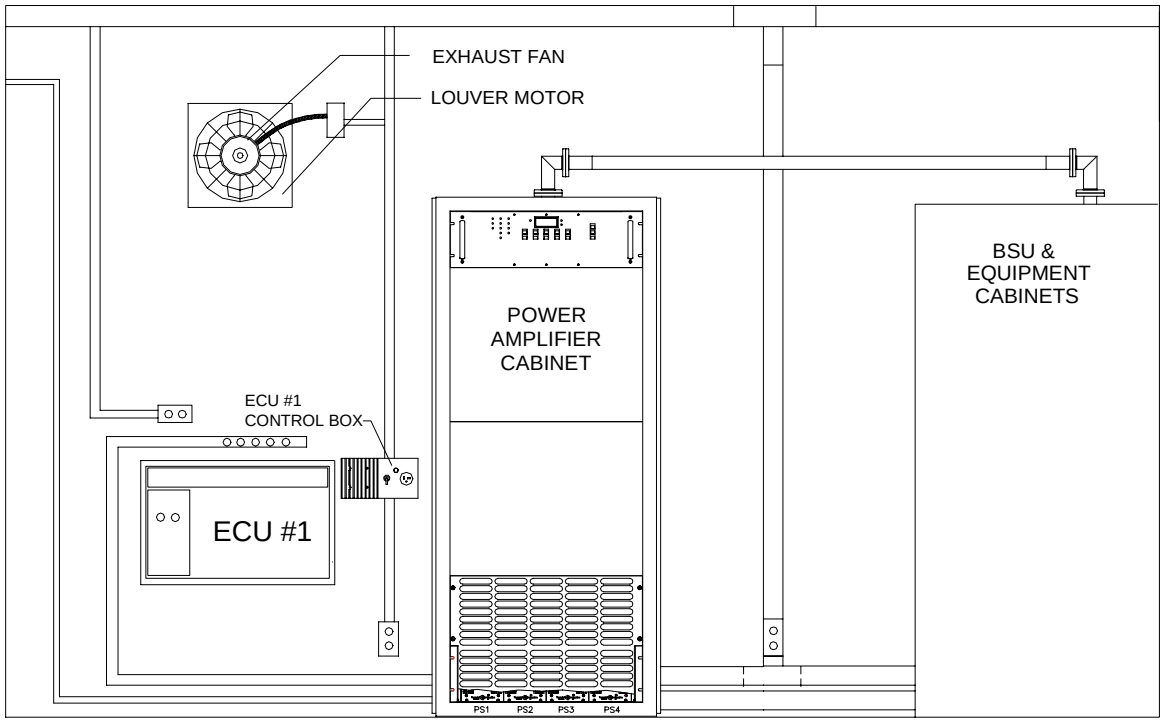

Figure 2-3 Profiler Shelter Side 2

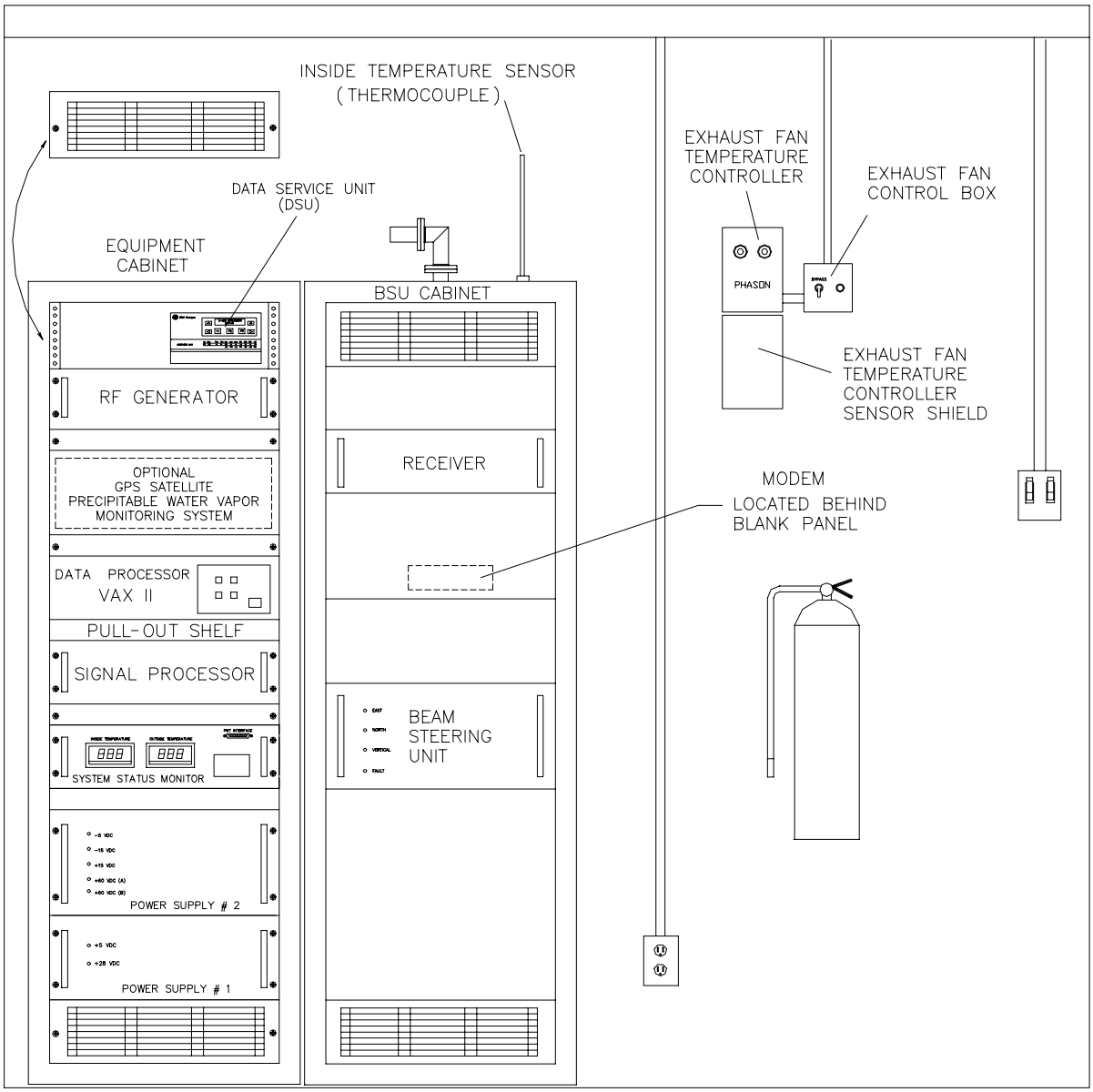

Figure 2-4 Shelter Layout Side 3

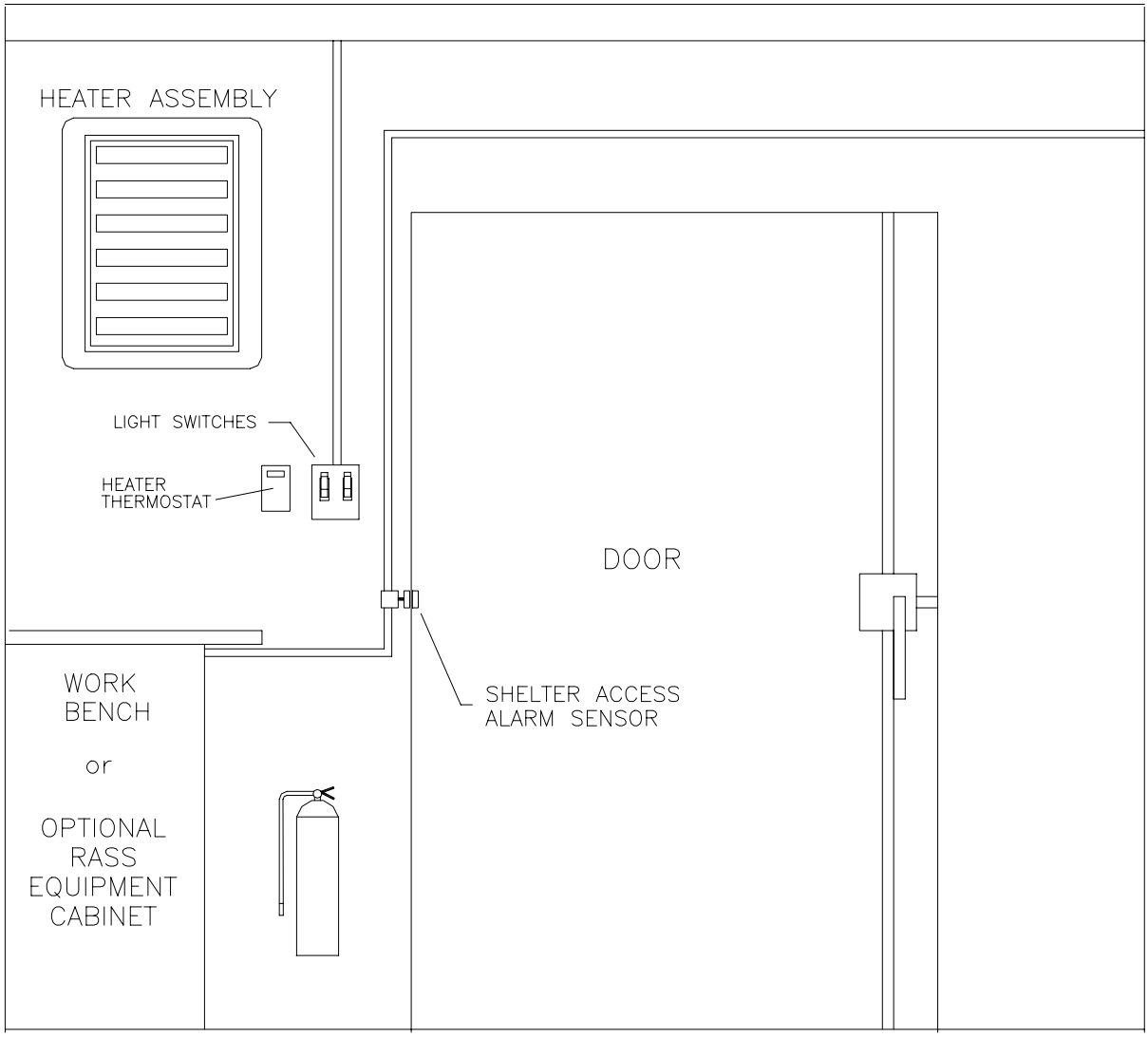

Figure 2-5 Shelter Layout Side 4

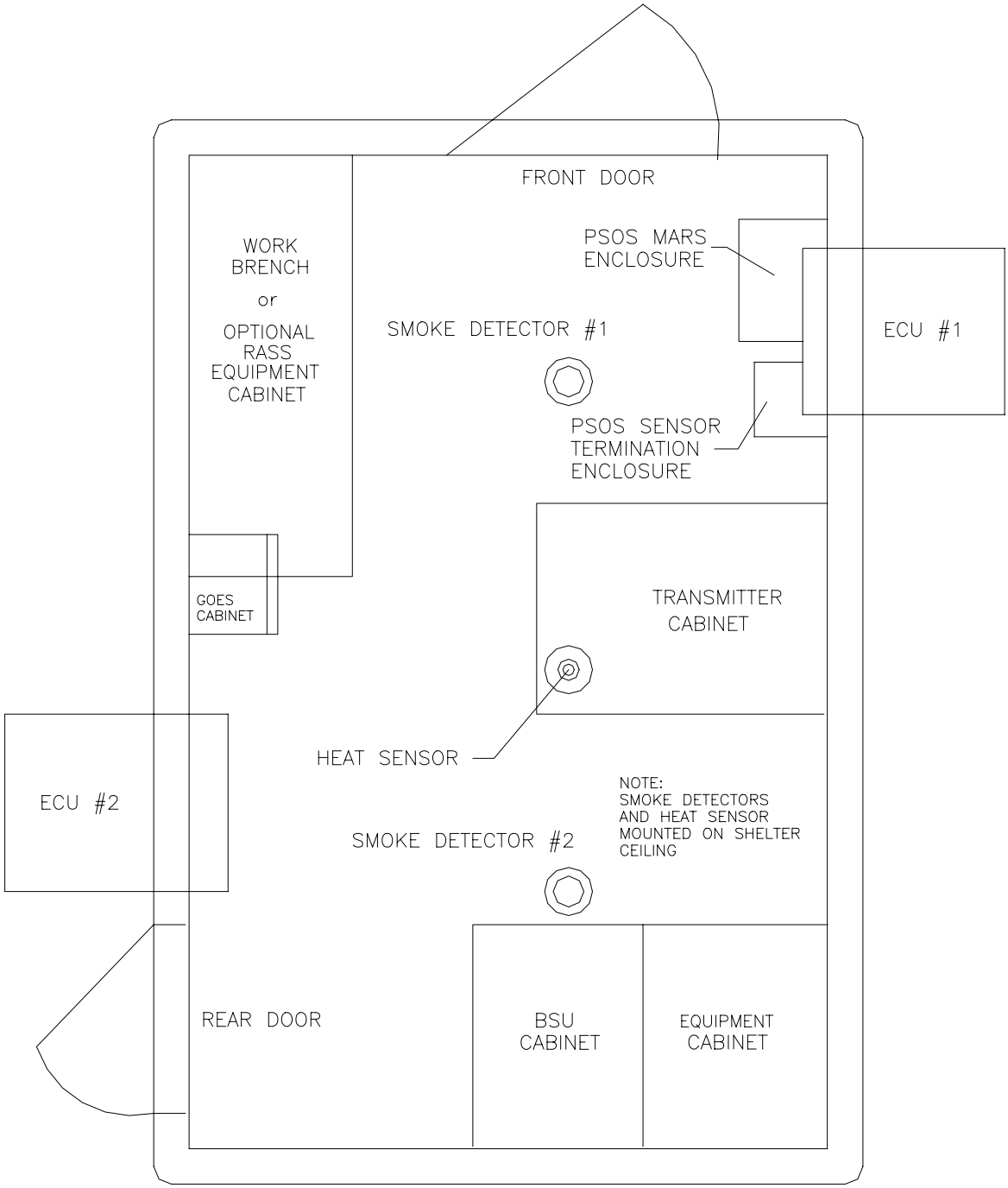

Figure 2-6 Shelter Layout Top View

2.2 Shelter AC Power

The NOAA Wind Profilers require 220 VAC 200 AMP (standard residential home electrical service) to operate. Power is routed to the service disconnect box and then into the Shelter Breaker Panel. Figure 2-7 shows the typical routing of AC power into the shelter and the approximate locations of installed AC surge protection devices. Figure 2-8 shows specifics about shelter ground connections.

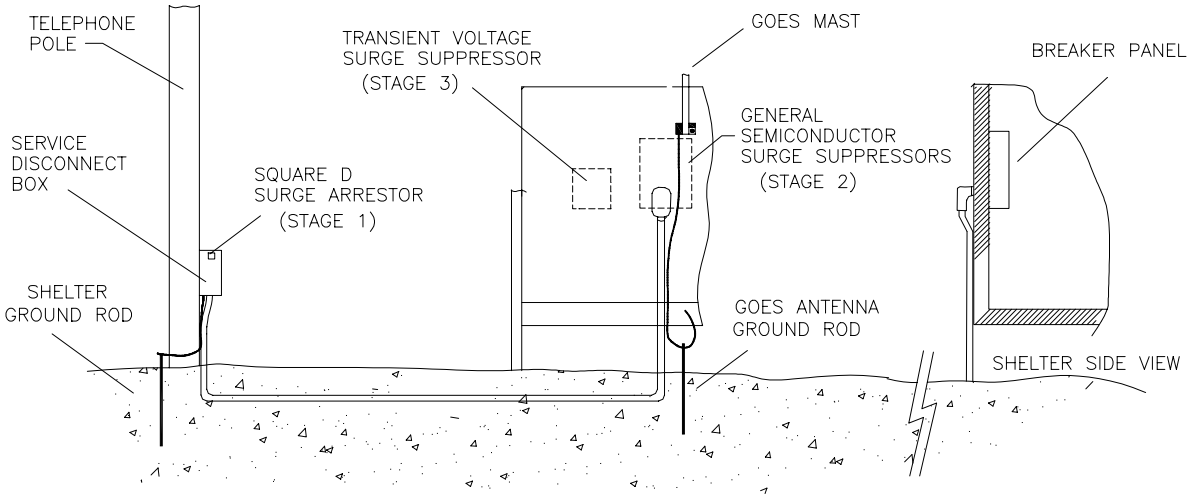

Figure 2-7 Shelter AC Power and Surge Protection

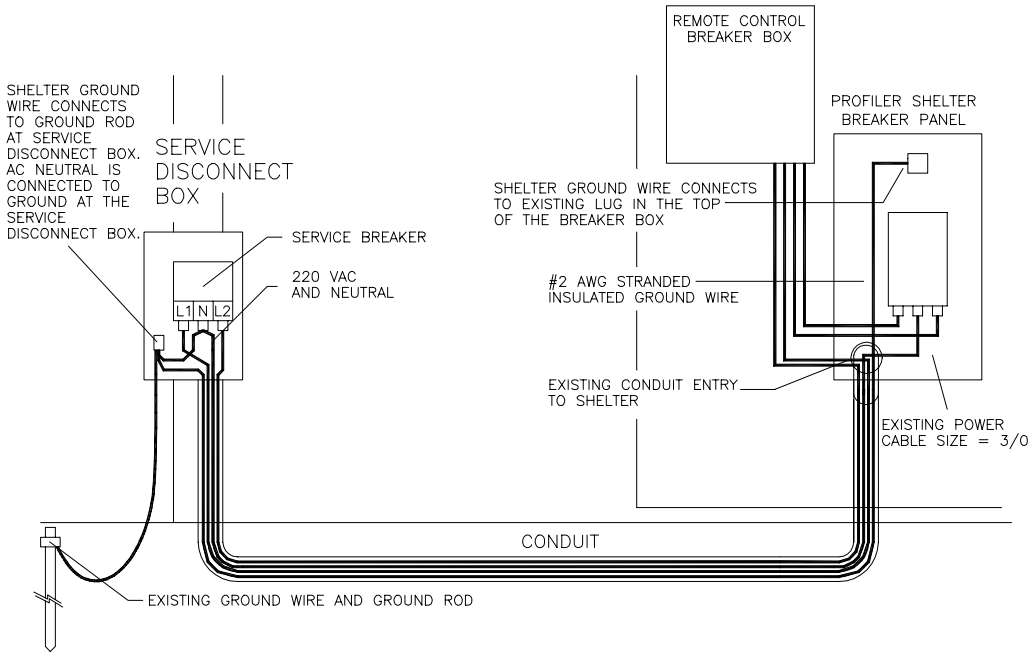

Figure 2-8 AC Power and Shelter Grounding

On the following pages, Figure 2-9 shows the Shelter Breaker Panel layout, Table 2-1 identifies the system circuit breaker allocations, and Table 2-2 identifies the circuit breaker specifications and part numbers.

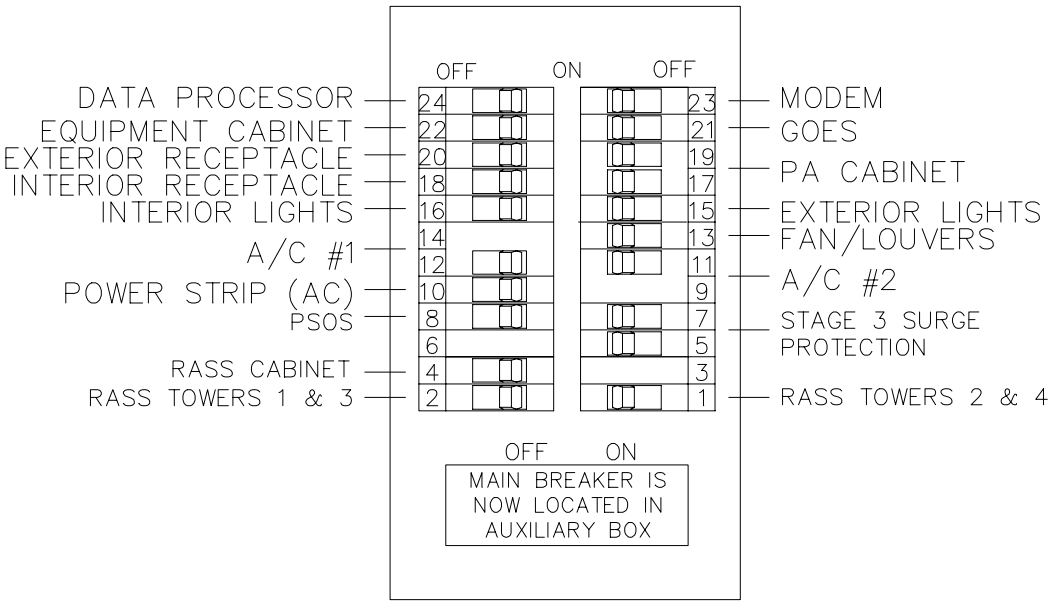

Figure 2-9 Shelter Circuit Breaker Panel Layout

Table 2-1 Circuit Breaker Directory

Breaker	Description	Description	Breaker
24	Data Processor	Modem	23
22	Equipment Cabinet	Goes Equipment	21
20	Exterior Receptacle	Power Amp Cabinet	19
18	Interior Receptacle	Power Amp Cabinet	17
16	Interior Lights	Exterior Lights	15
14	Air Conditioner #1	Fan/Louvers	13
12	Air Conditioner #1	Air Conditioner #2	11
10	Power Strip (AC)	Air Conditioner #2	9
8	PSOS	Stage 3 Surge Suppressors	7
6		Stage 3 Surge Suppressors	5
4	RASS Cabinet		3
2	RASS Towers 1 & 3	RASS Towers 2 & 4	1

Table 2-2 Circuit Breaker Specifications

Description	Slot#	Breaker Type	Square D P/N
Main Breaker	Main	200A, 2 Pole	KAL2620001380
Data Processor	24	15A, 1 Pole	Q0115
Equipment Power Supplies	22	15A, 1 Pole	Q0115
GOES Equipment	21	15A, 1 Pole	Q0115
Communication Equipment	23	15A, 1 Pole	Q0115
Power Amp Cabinet	17,19	80A, 2 Pole	Q0280
External Receptacle	20	20A, 1 Pole GFIC	Q0120GFI
Interior Receptacle Strip	8	15A, 1 Pole	Q0115
Interior Wall Receptacle	18	15A, 1 Pole	Q0115
Exterior Light	15	15A, 1 Pole	Q0115
Interior Light	16	15A, 1 Pole	Q0115
Fans/Louvers	13	15A, 1 Pole	Q0115
Air Conditioner #1	14,12	30A, 2 Pole	Q0230
Air Conditioner #2	11,9	30A, 2 Pole	Q0230
Stage 3 Surge Suppressors	7,5	20 A 2 Pole	Q0220
RASS Cabinet	4	15 A 1 Pole	Q0115
RASS Towers 1, 2, 3, 4	1,2	20 A 1 Pole	Q0120

On the following page, Figure 2-10 provides a schematic diagram outlining the AC power distribution in the profiler shelter. High current solid-state relays are used to control the flow of AC power to the shelter's environmental control units. This allows the shelter environment to be monitored and controlled by computer.

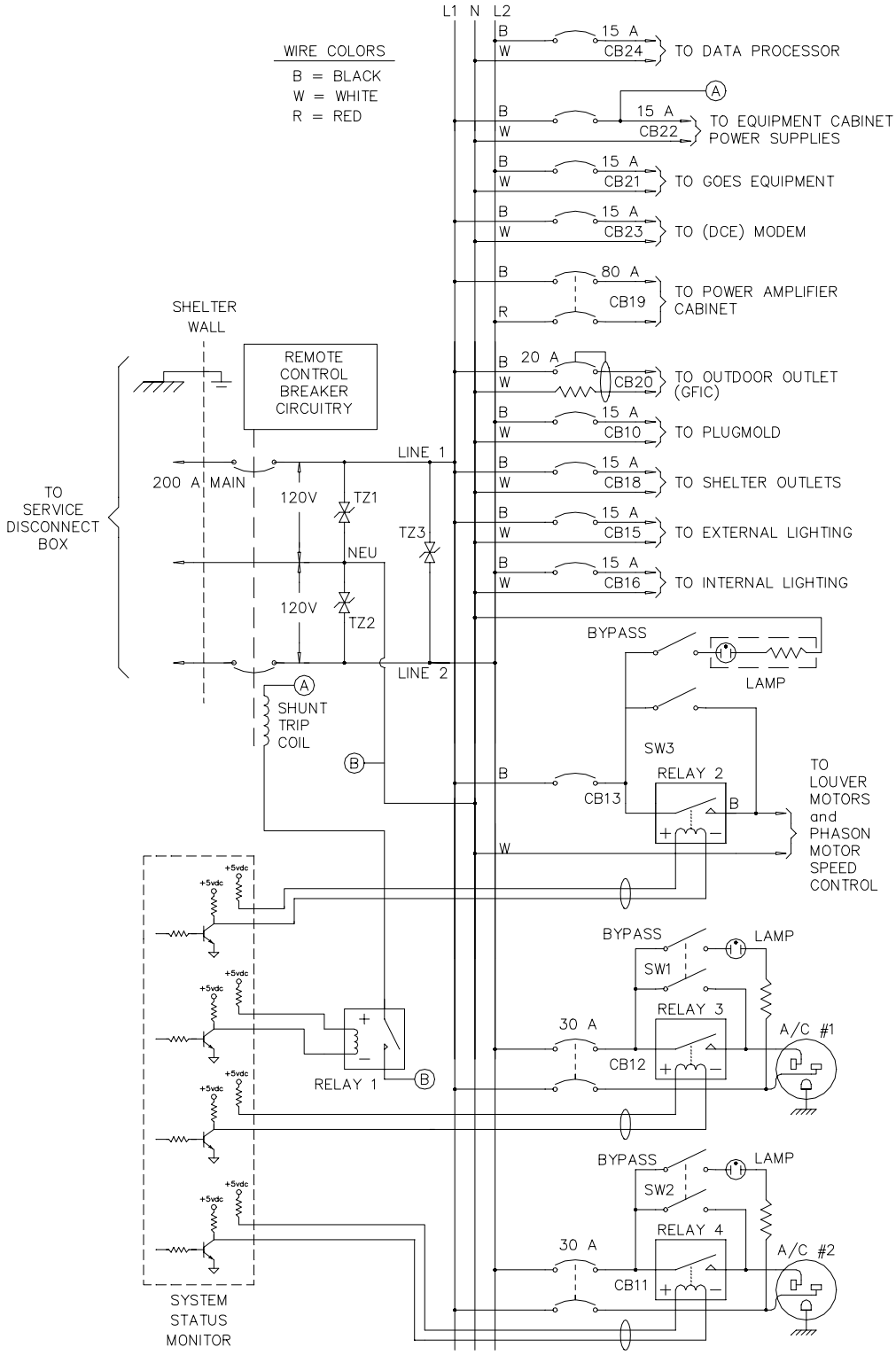

Figure 2-10 Shelter AC Power Distribution Schematic

2.2.1 Remote Control Main Breaker

Next to LRU failures, shelter main breaker trips at profilers are the second largest contributor to site down-time. In most cases, shelter breaker trips are caused by AC power fluctuations or power surges during storm passages. Although the site usually does not sustain any damage from these occurrences, the site remains down until a site visit is made (usually by NWS technician) to reset the main breaker.

To address this problem, the main breakers at all profiler sites are replaced with breakers that can be controlled remotely using a touch-tone phone. This “remote control breaker” is housed in its own enclosure mounted above the existing breaker panel as shown in Figure 2-11. A red emergency power-off button is mounted on the front cover of the enclosure. Pressing this button causes the main breaker to shut-off.

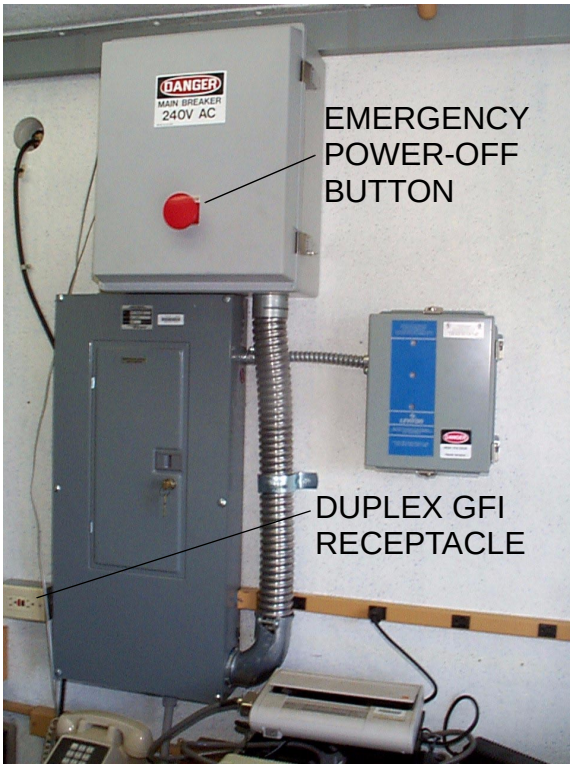

Figure 2-11 Remote Control Main Breaker

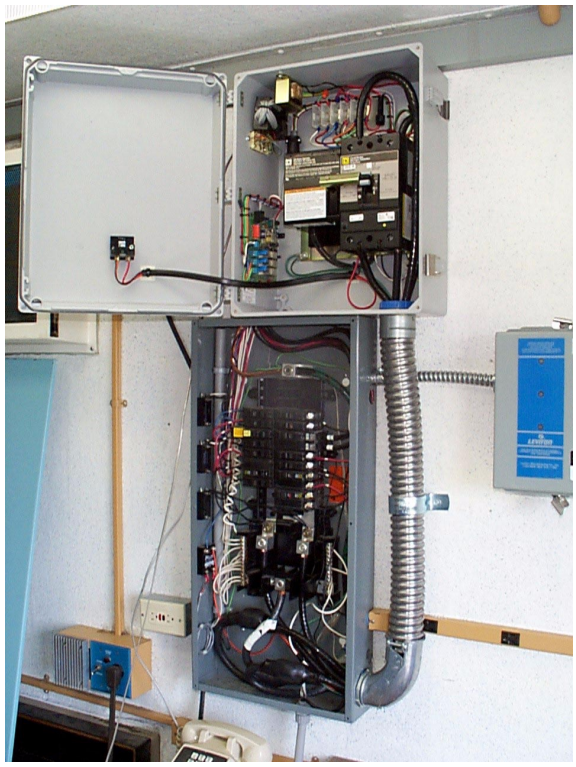

Figure 2-12 Remote Control Main Breaker Internal View

A Ground Fault Interrupt (GFI) duplex receptacle box is installed near the lower left of the breaker panel (see Figure 2-11). The GFI outlet is wired “upstream” of the main breaker and always has voltage present (even if the shelter main breaker trips). The only way to de-energize this duplex outlet is to turn off the breaker at the service disconnect box outside the shelter (see Figure 2-20).

A modular phone jack (female) located on the left side of the breaker enclosure provides the interface for the shelter voice-telephone line. The remote control breaker and the site telephone share the same phone line. Inside the box, four toroid chokes protect the phone line from fast rising transient voltages (A in Figure 2-13)

The breaker is a 200 Amp Square D Model *KAL2620001380* with an internal shunt coil (to trip the breaker) and auxiliary relay contacts that are monitored by the controller to determine if the breaker is in the closed (on) position (B in Figure 2-13).

The motor operator is a Square D Model *KAMO1* with bidirectional operation. One of two 120 VAC actuators can be energized to toggle the breaker switch to the *OFF* or *ON* position (C in Figure 2-13).

The controller is a Velleman Model *K6501* Remote Control By Telephone circuit board. The board features an integrated phone line interface and tone decoder, one input switch detector, and three 10 Amp relay outputs (D in Figure 2-13).

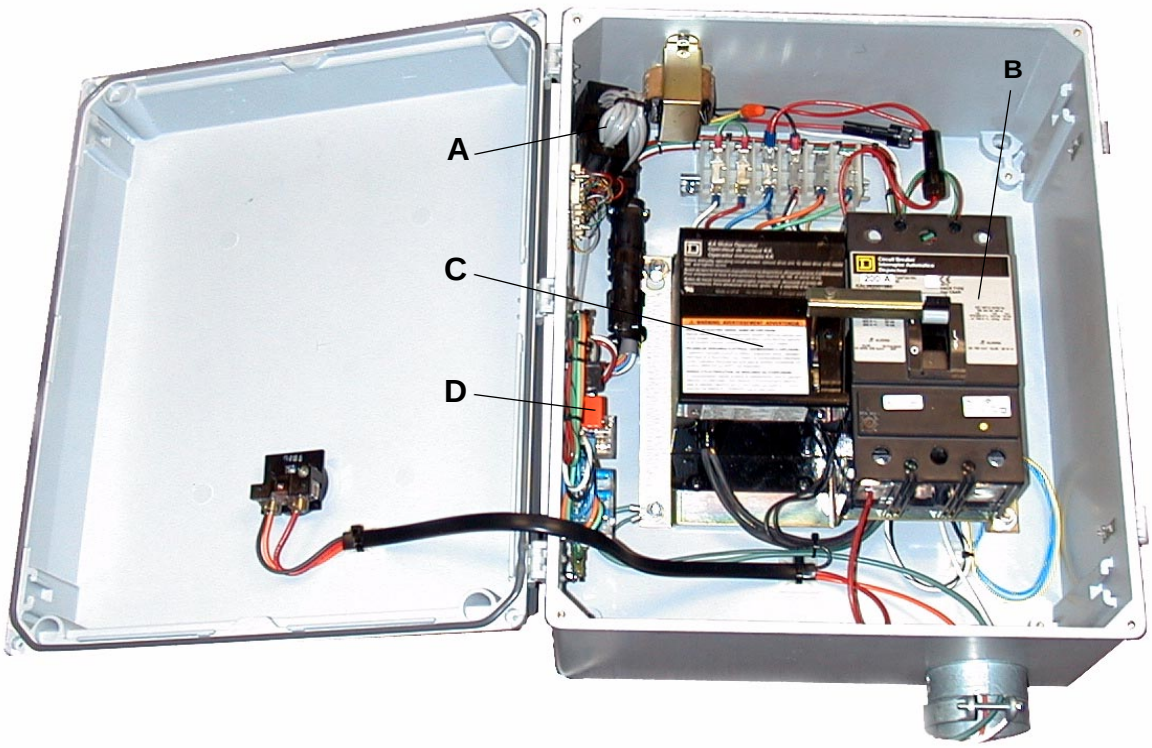

Figure 2-13 Remote Control Breaker Box Internal Components

The wiring diagram for the Remote Control Breaker is shown in Figure 2-14. The schematic diagram and component layout for the Velleman K6501 Controller are shown in Figure 2-15 and Figure 2-16 respectively. The K6501 controller wiring harness is shown in Figure 2-17

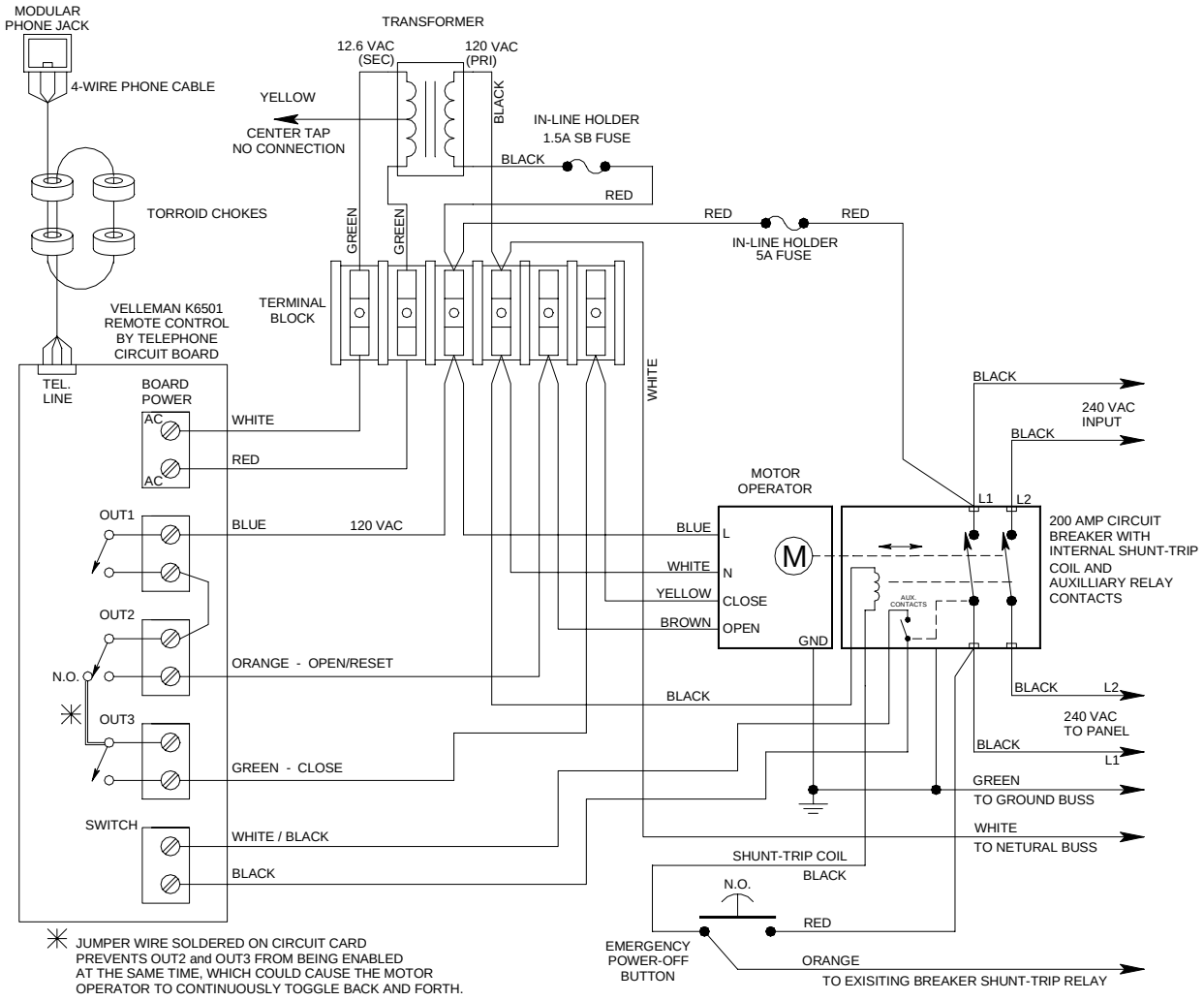

Figure 2-14 Remote Control Breaker Box Wiring Diagram

2.2.1.1 Remote Operation

2.2.1.1.1 Establishing Connection

Dial the site phone number. The controller will answer the phone on the 8th ring. The red “ON LINE” indicator LED will blink while the connection is established, and drop after several seconds after you hang up the phone.

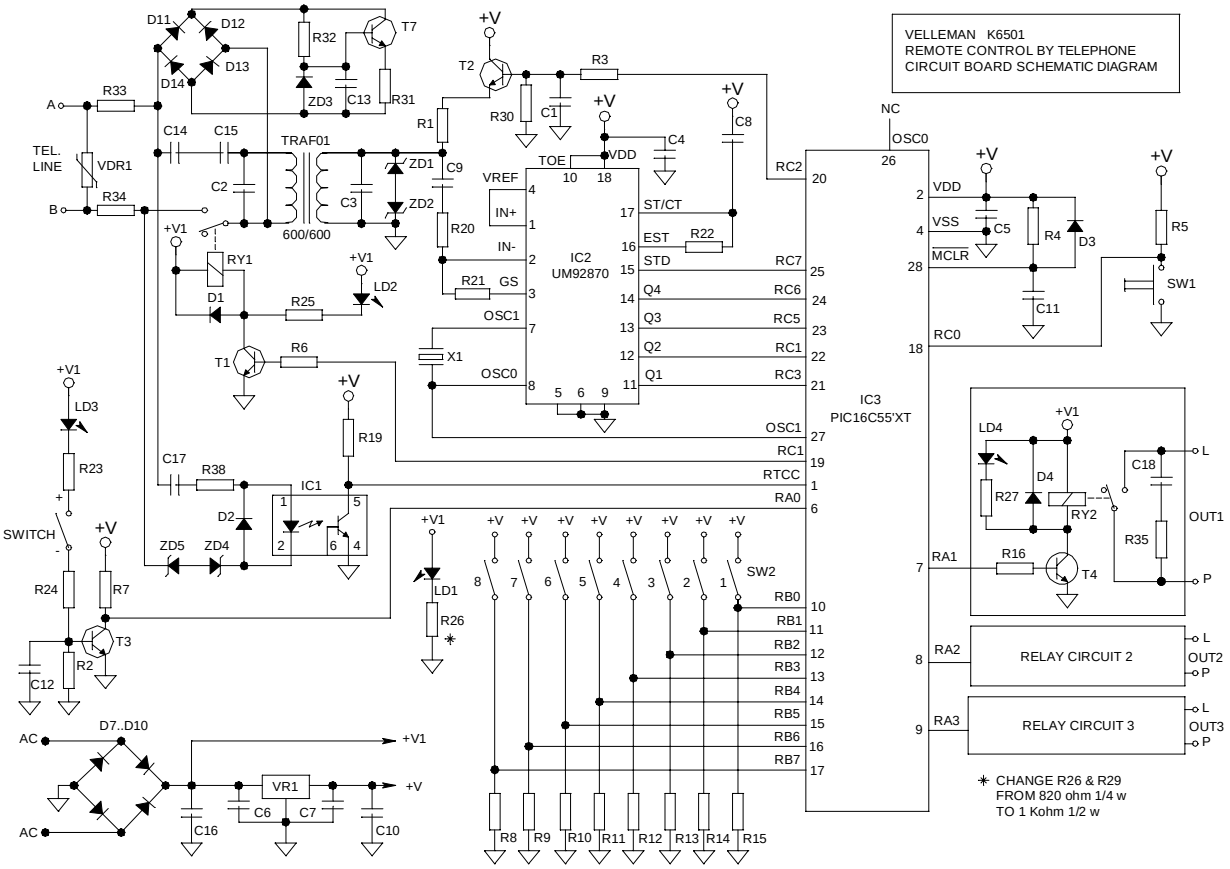

Figure 2-15 Velleman K6501 Controller Circuit Diagram

A few seconds after picking up you will hear a series of tones indicating the condition of the input and outputs. First the switch input (indicating if the main breaker is on or off), then output 1, output 2, and output 3 in that order. A double tone (one high tone and one low tone) indicates that the switch or relay is closed or *ON*, whereas a single low tone indicates the condition is open or *OFF*.

If you do not press a button within 20 seconds of the pickup, the phone connection will be automatically terminated by the controller.

If you enter a wrong 4-digit code, you will hear an alarm tone. After that you have two chances to enter a correct code. If the correct code has not been entered after three attempts, the controller will terminate the phone connection.

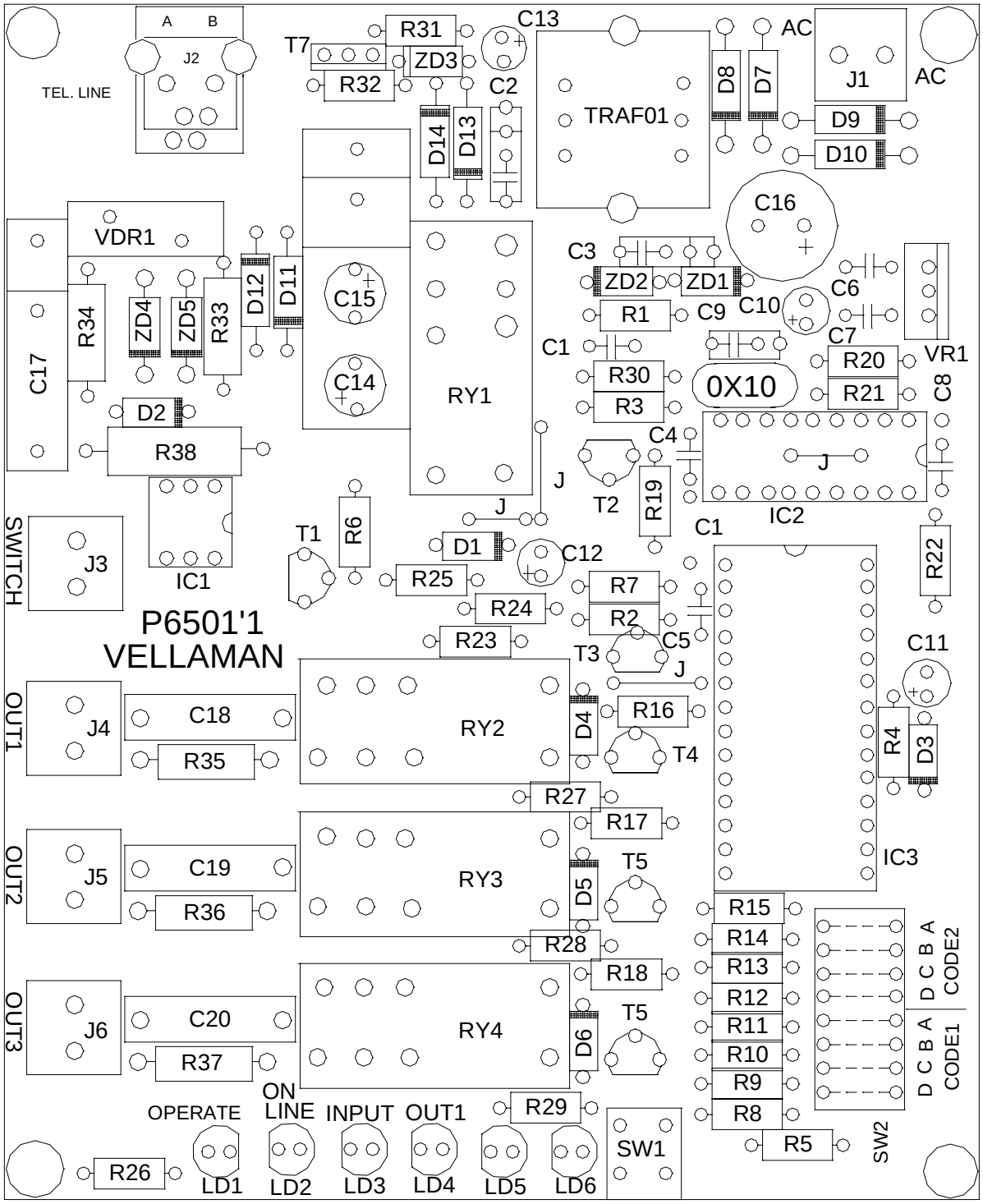

Figure 2-16 Velleman K6501 Controller Component Layout

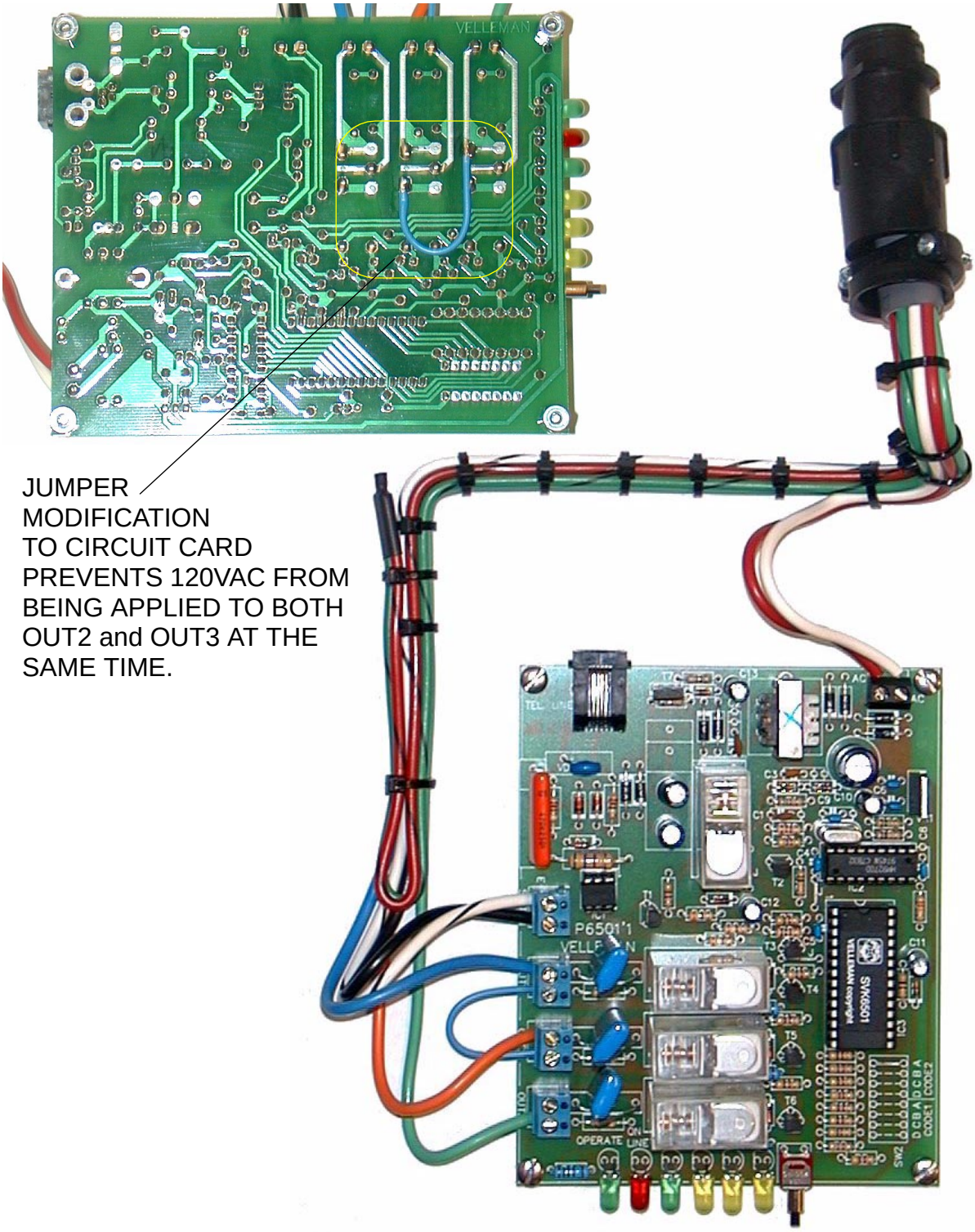

Figure 2-17 Velleman K6501 Controller Wiring Harness

2.2.1.1.2 Retrieving Information from the Input or Outputs

Using the touch-tone keypad on the phone dial “0100”. Once more you will hear the tones denoting the condition of the input and the three outputs (Input, OUT1, OUT2, and OUT3). You can repeat this procedure as often as you like.

A double tone (one high tone and one low tone) indicates that the switch or relay is closed or *ON*, whereas a single low tone indicates the condition is closed or *OFF*.

2.2.1.1.3 Switching a Particular Output ON or OFF

Enter the four digit code “n1-n2-n3-n4” the phone keypad. Where n1 is always “0”, n2 is always “1”, n3 is the number of the output 1,2, or 3, and n4 is “0” for OFF and “1” for ON.

Output	Turn OFF	Turn ON
OUT1	**0110**	**0111**
OUT2	**0120**	**0121**
OUT3	**0130**	**0131**

2.2.1.1.4 Remote Breaker Reset Procedure

1. Dial the site phone number, the controller will answer after the 8th ring.

2. Listen to the tones to determine with status of the switch and relays. Refer to Section 2.2.1.1.2 for information about interpreting the tones.

3. Press **0111** to turn-on *OUT1*.

4. Press **0121** to turn-on *OUT2* (this turns the main breaker to the *OFF* position).

5. Press **0120** to turn-off *OUT2*.

6. Press **0100** and listen to the tones to verify the status of the switch and relays. Make sure the switch is *OFF*, *OUT1* is ON, *OUT2* is *OFF*, and *OUT3* is *OFF*. Refer to Section 2.2.1.1.2 for information about interpreting the tones.

***** NOTE *****

***OUT3* will not function if *OUT2* is Active (ON). This prevents a condition that could cause the Motor Operator to continuously toggle the Main Breaker Switch OFF and ON!**

7. Press **0131** to turn-on *OUT3* (this turns the main breaker to the ON position).

8. Press **0130** to turn-off *OUT3*.

9. Press **0110** to turn-off *OUT1*.

10. Press **0100** and listen to the tones to verify the status of the switch and relays. Make sure the switch is *ON*, and *OUT1 - OUT3* are all *OFF*. Refer to Section 2.2.1.1.2 for information about interpreting the tones.

11. Hang-up phone.

2.2.1.2 Local Operation

The three outputs may be turned on or off manually be means of the push button. If the switch or outputs are on (closed) the corresponding LED indicator will illuminate (see Figure 2-18).

- Press the push button one to turn output 1 on or off.
- Press the push button twice without pause to turn output 2 on or off.
- Press the push button three times without pause to turn output 3 on or off.

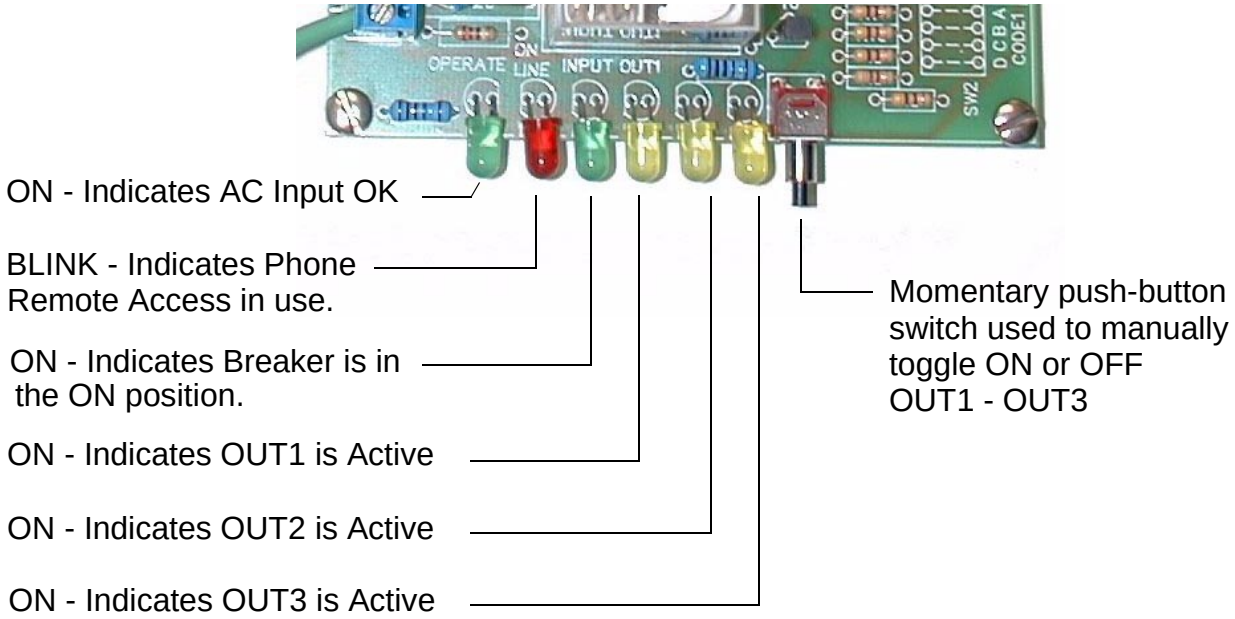

Figure 2-18 Velleman K6501 Controller LED Indicators and Switch Locations

2.2.1.2.1 Local Breaker Reset Procedure

If the main breaker trips, the switch will be midway between on and off. To reset the main breaker the switch must to turned off first before it can be switched to the on position. Avoid resetting the main breaker switch by hand (forcing the motor operator). Instead, use the following procedure to allow the motor to reset the main breaker.

The breaker must be reset by toggling the relays in a specific order. This is done by using the momentary switch at the end of the row of L.E.D.'s on the circuit card mounted at the bottom left hand side of the box (see Figure 2-18). The ON/OFF status of the breaker and relays are indicated by the LEDs labeled *OPERATE, ON LINE,INPUT, OUT1, OUT2, and OUT3* from left to right.

The 220VAC supply must be present at the box to reset breaker (***OPERATE*** LED must be illuminated).

1. Push the plunger once. This will activate ***OUT1***, and light the fourth (yellow) LED. (*OUT1* must be ON to use *OUT2* or *OUT3*.)

2. Push the plunger twice without pause. This will activate ***OUT2***, light the fifth (yellow) LED, and switch the breaker to the "OFF" position.

3. Push the plunger twice without pause. This will deactivate ***OUT2***, turn-off the fifth (yellow) LED. It is important to turn off *OUT2* before proceeding to the next step.

***** NOTE *****

OUT3 **will not function if** ***OUT2*** **is Active (ON). This prevents a condition that could cause the Motor Operator to continuously toggle the Main Breaker Switch OFF and ON!**

4. Push the plunger three times without pause. This will activate ***OUT3***, turn on the sixth (yellow) LED, and switch the breaker to the "ON" position.

5. Push the plunger three times without pause. This will deactivate ***OUT3***, and turn off the sixth (yellow) LED.

6. Push the plunger once. This will deactivate ***OUT1***, turn off the fourth LED, and return the box to its normal state.

7. **After the breaker has been reset, make sure that OUT1, OUT2, and OUT3 LED indicators are all OFF!**

2.3 Standard Power Down Sequence

The following standard power-down sequence should be used to replace any LRU in the Transmitter, BSU, or Equipment Cabinets. If any LRU is replaced in any one of these cabinets, all three cabinets must be powered down.

The intent of this controlled power-down sequence is to prevent the 449 MHz transmitter from amplifying brief transients generated by circuit instability occurring at power-down. A small probability does exist, where the transmitter could sustain some form of damage from such transients. See Section 6.2 for more information about the 449 MHz Power Amplifier and Serial Control and Monitoring Interface (SCMI) Assembly.

1. Place the Power Amplifier in *Local* mode by pressing the **LCL** switch on the SCMI front panel. The *REM* LED indicator on the SCMI front panel turns *OFF* when the power amplifier is in *Local* mode.

2. Place the Power Amplifier in *STBY* (Standby) mode by pressing the **OPR STBY** switch on the SCMI front panel. The yellow *STBY* LED indicator illuminates when the power amplifier is in Standby mode. In STBY mode, the RF input to the transmitter is effectively shut-off and the power amplifier will <u>not</u> radiate.

3. Locate the circuit breaker panel on the wall next to GOES Cabinet and the work bench. Refer to Figure 2-9 for the layout of the breaker box.

4. Turn off the following circuit breakers in sequence:

   A. #24 - Data Processor.
   B. #22 - Equipment/BSU Cabinet
   C. #17/#19 - PA Cabinet

2.4 Standard Power Up Sequence

1. Turn on the following AC breaker switches in sequence, pausing five seconds in between each switch:

   A. #24 - Data Processor, wait 5 seconds
   B. #22 - Equipment/BSU Cabinet, wait 5 seconds
   C. #17/#19 - PA Cabinet.

2. When the radar is first powered-on, there is an expected series of events that occur during the boot-up process. These events can be observed visually, and provide valuable insight to the health of the radar and its sub-systems. This sequence of events is described in Section 2.4.1, *Profiler Boot-up Sequence*.

2.4.1 Profiler Boot-up Sequence

Once AC power is applied to the Data Processor (DP), Equipment Cabinet, and Transmitter Cabinet, the profiler progresses through a standard boot-up sequence. This sequence of events can be observed to verify or troubleshoot successful startup of the profiler system. The boot-up sequence of events is defined as follows:

1. The Data Processor (DP) runs through its countdown sequence. During each stage of the countdown sequence the RUN LED on the DP front panel will blink. When the DP successfully completes its boot-up sequence the RUN LED will illuminate continuously. Simultaneous to the RUN LED blinking, a single character alphanumeric display located on the rear panel of the DP displays hexadecimal digits signifying the current stage of the countdown sequence. When the alphanumeric display reaches zero, the DP has completed boot-up successfully. If the DP fails to complete this boot-up sequence, or the countdown gets stuck in a loop, it usually indicates an internal problem with the DP. This type of problem can usually be remedied by re-seating the cards in the DP card cage, or in the worst-case scenario, by replacing the DP assembly (see Section 4.4.2).

2. Immediately after the DP completes its boot sequence, the beam indicator LED located on the front panel of the Beam Steering Unit (BSU) switches from the Vertical beam to the East beam. If the BSU fails to switch to the East Beam, it generally indicates a potential problem with the Signal Processor (SP), or possibly a problem with Power Supply #1 or Power Supply #2.

3. After the BSU switches to the East Beam, the DP polls the System Status Monitor (SSM) for the site specific information stored on the SSM EEPROMs. Failure to acquire the site specific information from the SSM will cause the DP to revert to Initial Setup mode. This type of behavior may indicate a disconnected cable between DP port B1 and SSM port J2, or some other RS-232 related hardware problem.

4. If the DP communicates successfully with the SSM, the DP attempts to upload operating parameters to the GOES assembly. When the DP is communicating with the GOES assembly the Active LED on the GOES Master Control Module (MCM) front panel illuminates. If the Active LED on the GOES assembly does not illuminate, there may be a cabling or hardware problem with either DP port B4 or the GOES MCM.

5. After the DP has successfully initialized the GOES, the DP enables responses to login requests from the Profiler Maintenance Terminal (PMT). If the DP is unable to successfully program the GOES MCM, PMT login requests are ignored until the DP either; successfully programs the GOES MCM, or declares the GOES MCM inoperative. This scenario can cause PMT log in attempts to be ignored for up to

15 minutes. This type of failure can be caused by RS-232 hardware failures in the DP and/or GOES MCM, requiring replacement of one or both of these LRUs.

2.5 Voltage Suppression Devices

As indicated in Figure 2-19, Voltage Suppressor Schematic Diagram, the AC power lines feeding the profiler shelter have three stages of voltage surge suppression. The first stage is located outside of the shelter in the service disconnect box, the second is located inside the main breaker panel, and the third is located in a box next to the main breaker panel. Refer to Figure 2-7 for the location of these devices.

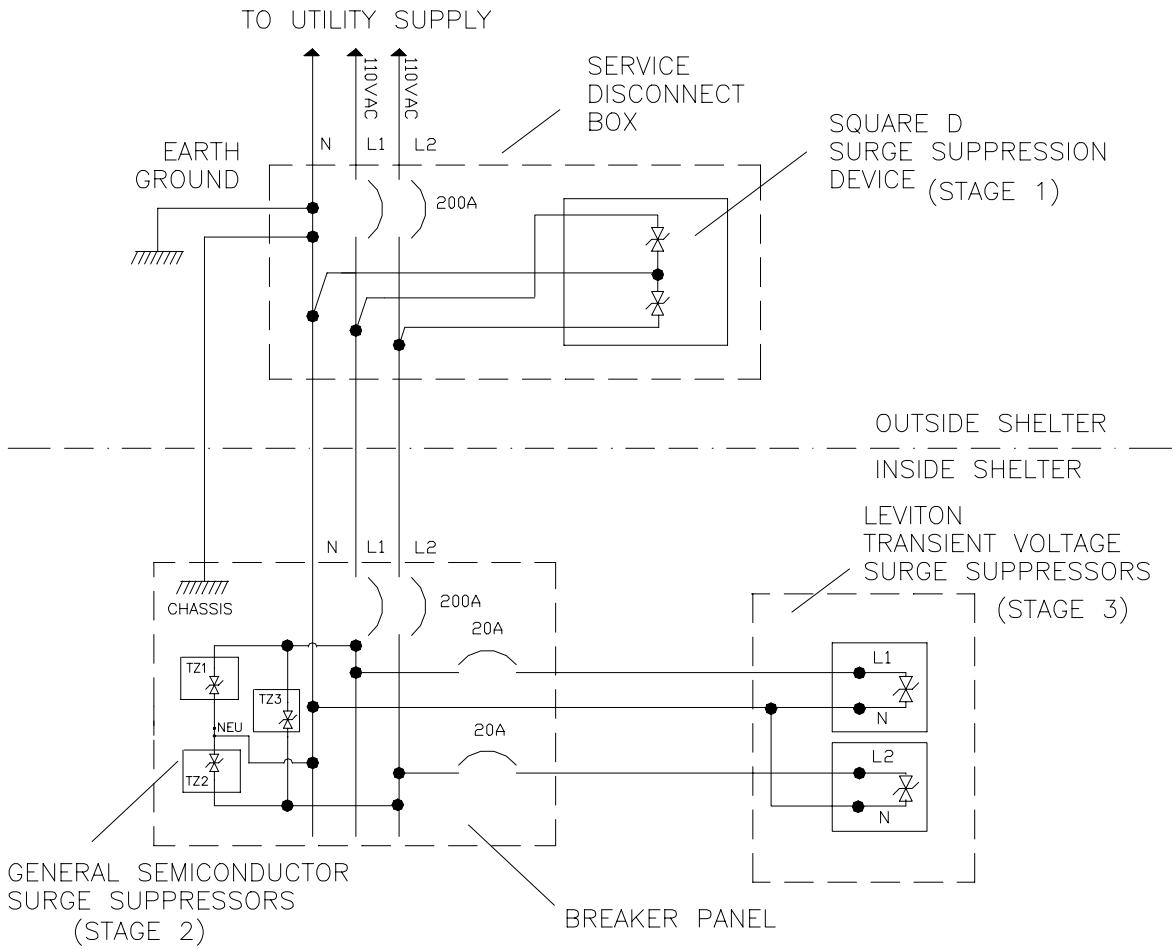

Figure 2-19 AC Power Voltage Suppression Schematic Diagram

2.5.1 Stage 1 Voltage Suppressor Replacement Procedure

The Power Line Surge Suppressor is located outside of the shelter and attached to the side of the service disconnect box. The device is a Square D P/N SP1175 or equivalent, and provides common mode protection.

***** CAUTION *****

When replacing the surge suppression devices, use extreme caution within the service disconnect box. There is no way to completely shut off power to this box.

LETHAL VOLTAGES WILL BE PRESENT ON THE SOURCE SIDE OF THE BREAKER!

1. Locate the service disconnect box and turn off the main breaker (see Figure 2-20).
2. Open the service disconnect box and locate the surge suppressor on the side.
3. Disconnect the three wires between the two-phase power and the suppressor unit.
4. Remove the suppressor unit by removing the nut on the inside service disconnect housing.
5. Replace with a new suppressor unit and connect the wires between the new unit and the two-phase power and ground.
6. Replace the housing cover and turn on the main breaker.

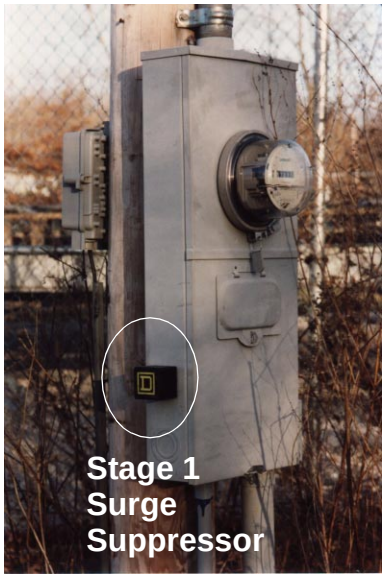

Figure 2-20 Typical Profiler Site AC Power Service Disconnect

2.5.2 Stage 2 Voltage Suppressor Replacement Procedure

Stage 2 voltage suppressors were provided as original equipment by the manufacturer when the radar was installed and consist of three units. Two units provide common-mode protection for the 110 VAC lines and the third unit provides differential-mode

protection across the two 110 VAC lines. These suppressors are located inside the breaker panel of shelter (see Figure 2-21). Replacement of Stage 2 voltage suppression devices requires removing the main breaker panel cover.

Because the lights in the shelter will be off when the Main Breaker is thrown, a flashlight or other means of portable lighting will be useful for this procedure. The shelter doors can also be propped open to allow light into the shelter.

***** CAUTION *****

The MAIN AC BREAKER and the SERVICE DISCONNECT BREAKER must be *OFF* for this procedure.

1. Turn off the breaker at the service disconnect box located outside the shelter and the main breaker inside the shelter.

2. Remove the mounting screws at the front of the circuit breaker panel, and remove the circuit breaker panel cover.

3. Locate the voltage suppression devices on the inner left side of the breaker box. Refer to Figure 2-21 for the internal layout of the panel. Trace the wires to their points of connection and disconnect them. The replacement voltage suppression devices will not have wires soldered to them. The wires to the old voltage suppressors must be disconnected and re-soldered to the replacement devices. The wire colors and their locations should be noted to properly reconnect the replacement units.

4. Remove the faulty suppressor(s) from the breaker panel wall.

5. Restore AC power to the shelter to permit use of a soldering gun.

6. Transfer the wires to the new devices.

7. Turn off the shelter power at the main breaker and at the service disconnect.

8. Install the new suppressors and reconnect the wires.

9. Replace the circuit breaker panel cover.

10. Turn on the service disconnect box breaker and the shelter main breaker.

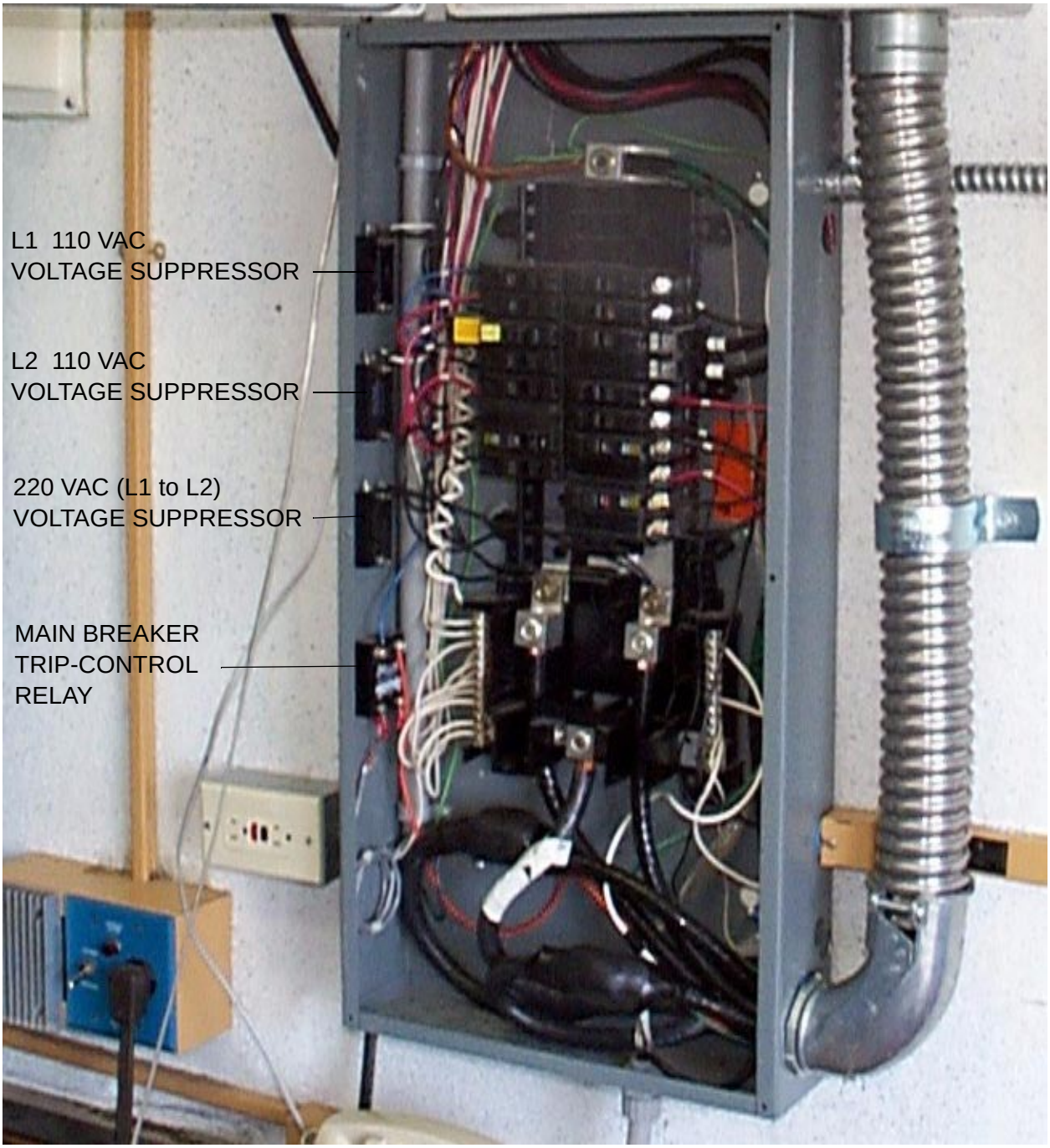

Figure 2-21 Shelter Circuit Breaker Panel Internal Layout

2.5.3 Stage 3 Voltage Suppressor Replacement Procedure

Stage 3 Transient Voltage Surge Suppressors (TVSS) are located in the shelter near the main breaker panel. These devices are housed in a LEVITON TVSS enclosure with a hinged lid (see Figure 2-22). Inside the enclosure is a panel with four receptacles for the TVSS modules. The top two receptacles are wired to the AC line power and the bottom two are slots for spare modules. On the face of each TVSS module is a green LED that indicates the module's functional state. If the LED is not illuminated when the module is plugged in, the module is probably damaged.

1. Locate the LEVITON TVSS unit on the wall of the shelter and open the lid by loosening the fastening screws.

2. Inspect the panel for failed modules by observing the individual module LED status light indicators.

3. Turn off the appropriate circuit breaker. (The breaker number may vary from site to site).

4. Carefully remove the failed module by pulling it straight out of the board.

***** CAUTION *****

TO AVOID CAPACITIVE SHOCK, discharge the module by placing the blade of an insulated screwdriver or similar instrument across the two metal posts of the module.

5. Check for continuity between the two metal posts using an Ohm meter. If the resistance is less than 1 kilo Ohm, the module has failed.

6. Replace the failed module with a new module identical to the one removed.

7. Close the lid of the enclosure, fasten the retaining screws, and reset the appropriate breaker. Verify that the LED indicator in the replaced module is illuminated.

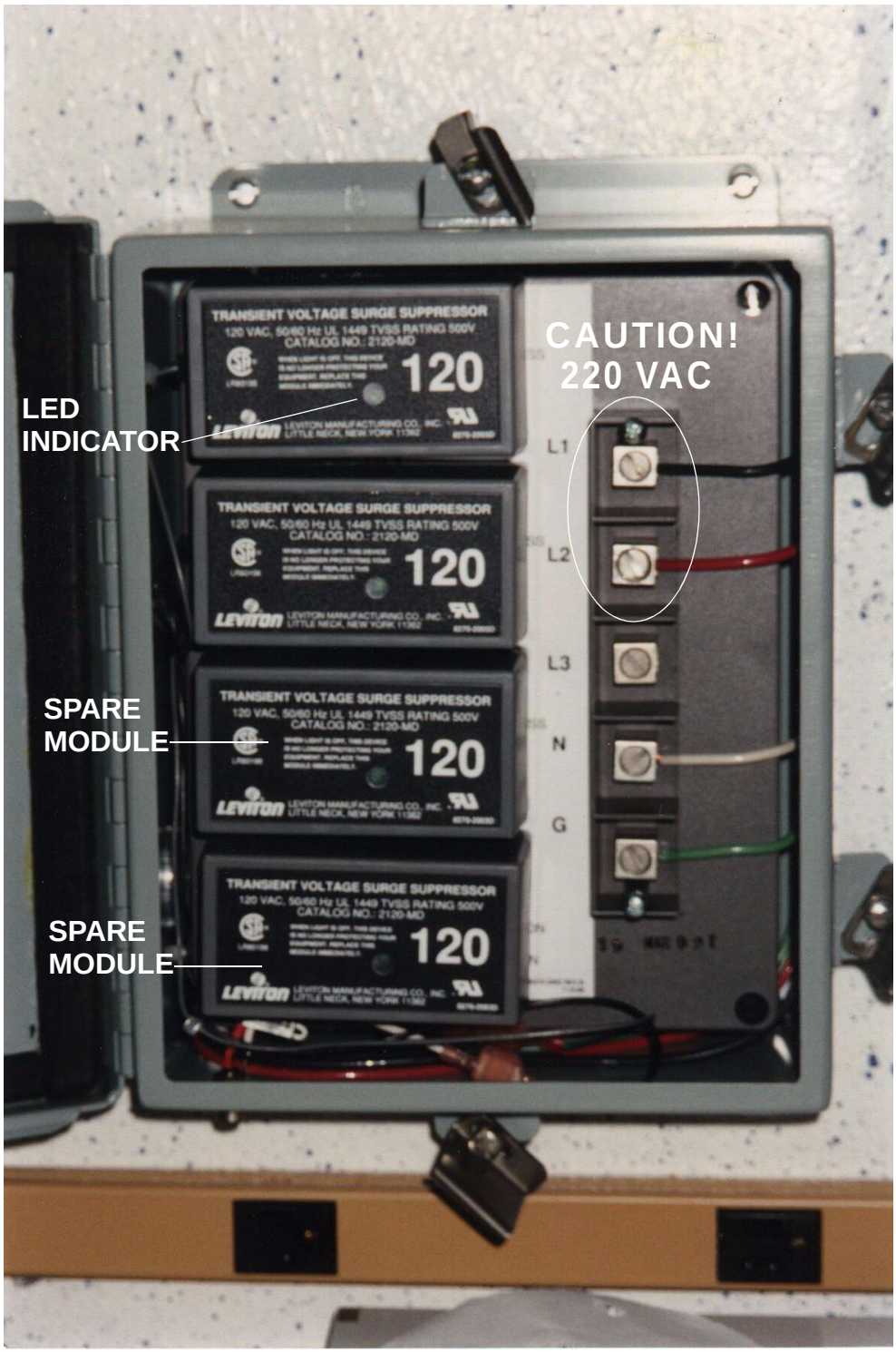

Figure 2-22 LEVITON Surge Suppressor Enclosure

3 Environmental Monitoring and Control

The environment of the NOAA Wind Profiler Shelter Assembly is monitored and controlled by the Status Monitor Assembly, also referred to as the System Status Monitor (SSM). Conditions monitored by the SSM include inside and outside temperature, smoke, flooding, access to the equipment shelter, and access to the antenna field. The SSM monitors nine environmental sensors and four transmitter- related sensors, and commands four solid-state relays that control the air conditioners (ECUs), exhaust fans and louvers, and site shut-down. Figure 3-1 depicts the SSM environmental interfaces.

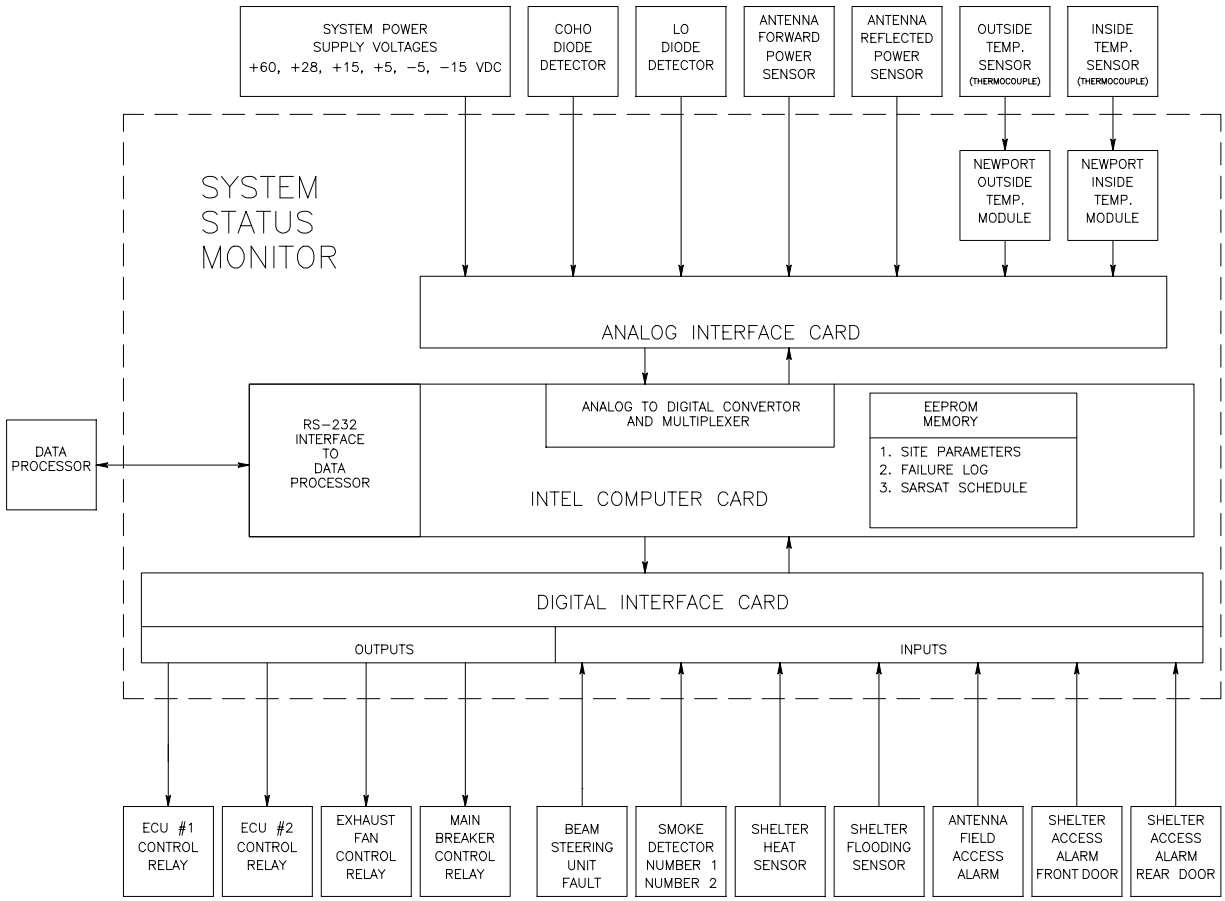

Figure 3-1 System Status Monitor Environmental Interfaces

3.1 Temperature Monitoring and Control

The SSM uses three sensors to monitor shelter temperature: the Inside Temperature Sensor (or Inside Thermocouple Assembly) located at the top of the BSU cabinet (see Figure 2-3 in the previous Section); the Outside Temperature Sensor (or Outside Thermocouple Assembly) located outside the shelter behind the equipment rack (in the antenna field); and the Inside Heat Sensor (or Over-Temperature Sensor) located at the center of the shelter ceiling (see Figure 2-6).

A temperature control algorithm, running on firmware in the SSM Intel 186/03A computer card, monitors temperature both inside and outside the shelter. A flow diagram for this algorithm is presented in Figure 3-2. The algorithm engages the shelter's environmental control system to keep the inside temperature between 70 and 80 F (21 - 27 C). The temperature control algorithm functions as defined in Table 3-1.

Table 3-1 Shelter Temperature Control Algorithm

Inside vs. Outside Temperature	SSM Control Action
Outside Temp. (Irrelevant) Inside Temp. < 60 F (15 C)	No matter what the outside temperature is, if the inside shelter temperature is below 60°F SSM shuts off both ECUs and the exhaust fan.
Outside Temp. < 60 F (15 C) Inside Temp. > 70 F (21 C)	The SSM uses the exhaust fan to pull hot air out of the shelter. A vent at the opposite side of the shelter opens to allow outside air to enter the shelter. Once the inside temperature falls below 70 F (21 C), the SSM shuts off the exhaust fan and closes the vent.
Outside Temp. > 60 F (15 C) Inside Temp. > 70 F (21 C)	The SSM uses the ECUs to cool the shelter. Once each hour, the SSM will switch the cooling load from one AC unit to the other to equalize use of the two units.
Outside Temp. > 60 F (15 C) Inside Temp. >80 <90 F (27-32 C)	The SSM will engage both ECUs until the inside temperature falls blow 80 F (27 C).
Outside Temp. > 60 F (15 C) Inside Temp. >= 100 F (37.5 C)	If the inside temperature reaches 100 F (37.5 C), the SSM will turn on both ECUs and the exhaust fan. If no reduction in temperature is measured after 6 minutes, the SSM will shut down the profiler by tripping the Main Breaker using the Main Breaker Trip Control Relay (see Figure 2-10).

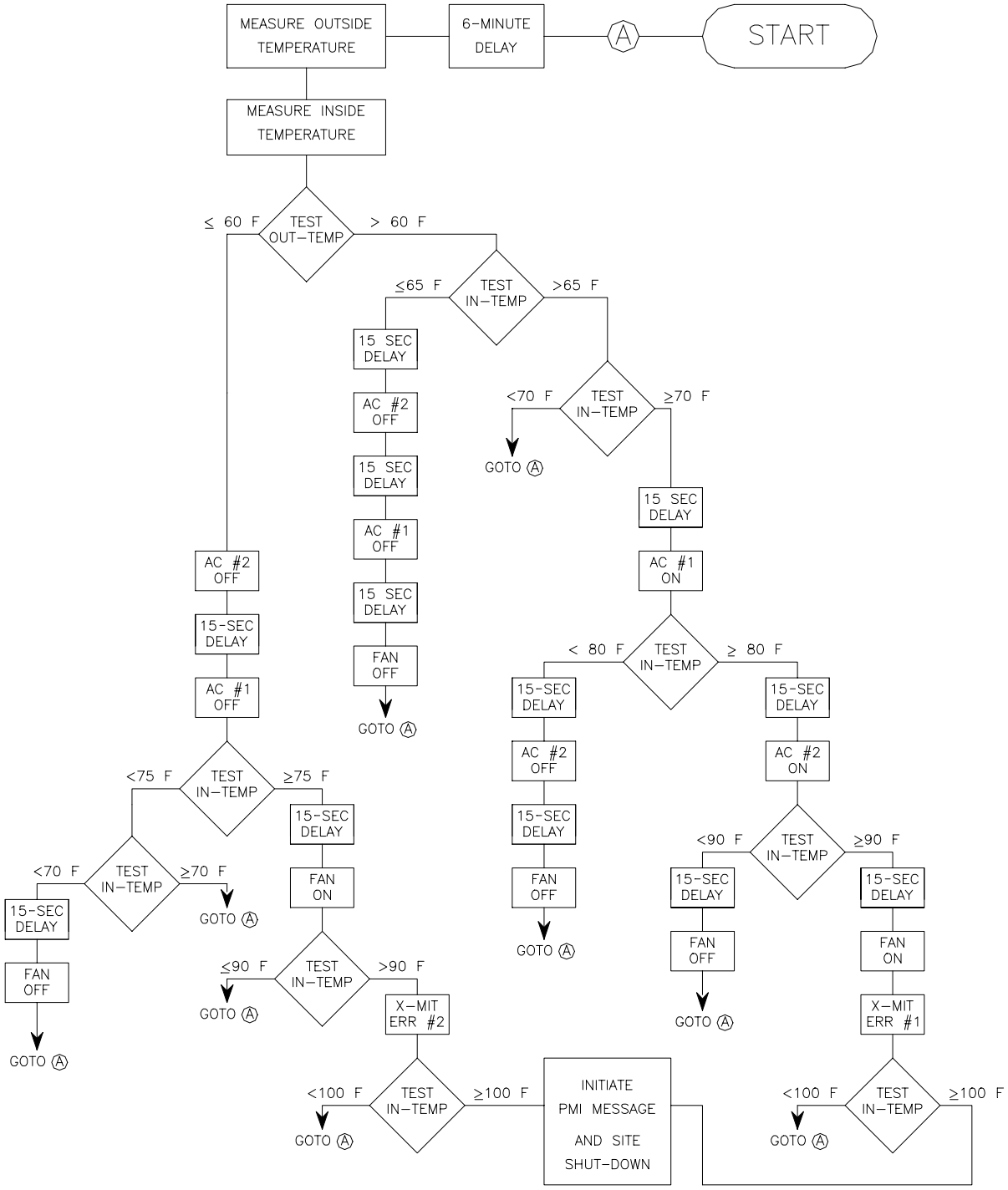

Figure 3-2 Shelter Temperature Control Algorithm Flow Chart

3.1.1 Temperature Sensors and Meters

The SSM contains two integrated temperature meters that provide the interfaces between the temperature sensors and the SSM Intel 186/03A computer. The displays of these meters are on the front panel of the SSM.

The temperature sensors are connected to the temperature meters via thermocouple cables (see Figure 3-3). There are four pairs of screw terminations between the temperature sensors and the input of the temperature meters. If the connections between the sensor and the meter are not making reliable contact, the meter will display the number "1" in the left-most position (in the same way a digital ohm meter displays an over-range condition with an open load).

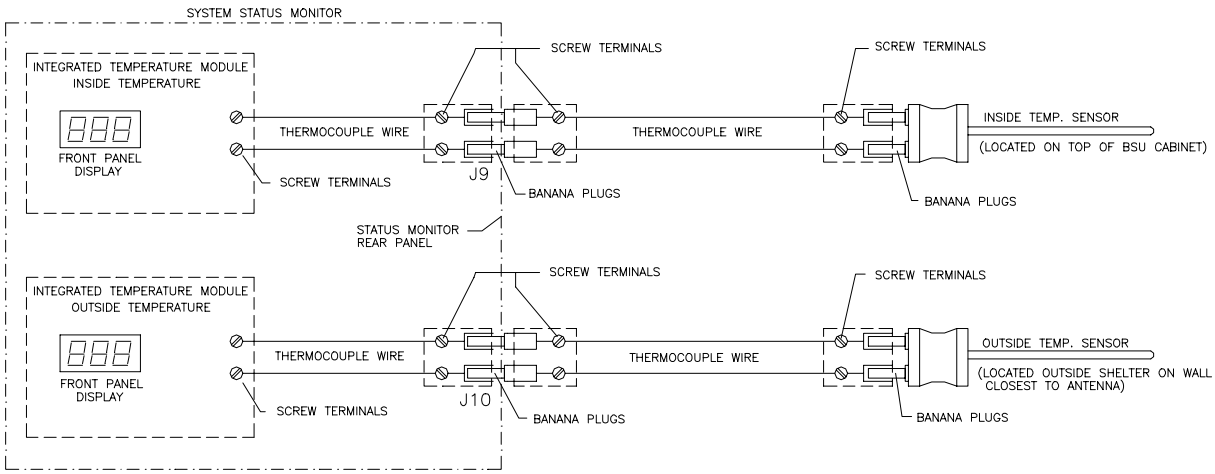

Figure 3-3 Inside/Outside Temperature Sensor Connections

If this condition affects the inside temperature sensor, the SSM computer "assumes" that the shelter temperature exceeds 100 F (37.5 C) and trips the main breaker. If the condition affects the outside temperature sensor, the environmental control algorithm will not function correctly and may turn on the ECUs when the outside air temperature is too low. If the ECUs run for prolonged periods while the outside temperature is below 50 F (10 C), damage to the A/C compressors may result.

To correct a temperature sensor reading error, trace the thermocouple wires to every point of connection between the sensor and the temperature meter, and tighten the screw terminals or reconnect the wires, as required. It may be necessary to open the SSM top cover and tighten the internal connections between the temperature meter and the rear panel. All plug contacts should be checked for corrosion or oxidation. If corrosion is found, clean the contacts on both male plugs and female receptacles.

3.1.2 Shelter Heat Sensor

The Shelter Heat Sensor, essentially a "normally open," single pole-single throw (SPST) switch, is located in the center of the shelter ceiling (see Figure 2-6). Figure 3-4 shows the heat sensor mounted on the shelter ceiling, and Figure 3-5 shows the heat sensor wiring terminations to the SSM.

A bimetallic element in the sensor keeps the heat sensor's switch open. If the temperature inside the shelter reaches 135 F, the bimetallic strip causes the internal switch contacts to close. The SSM detects this switch closure and after a 30 second delay, trips the main breaker in the shelter.

If the heat sensor element has tripped, the black button at the center of the heat sensor pops-out. Before attempting to reset the shelter main breaker, the heat sensor must be reset by pushing the black button at the center of the heat sensor back into its normal position.

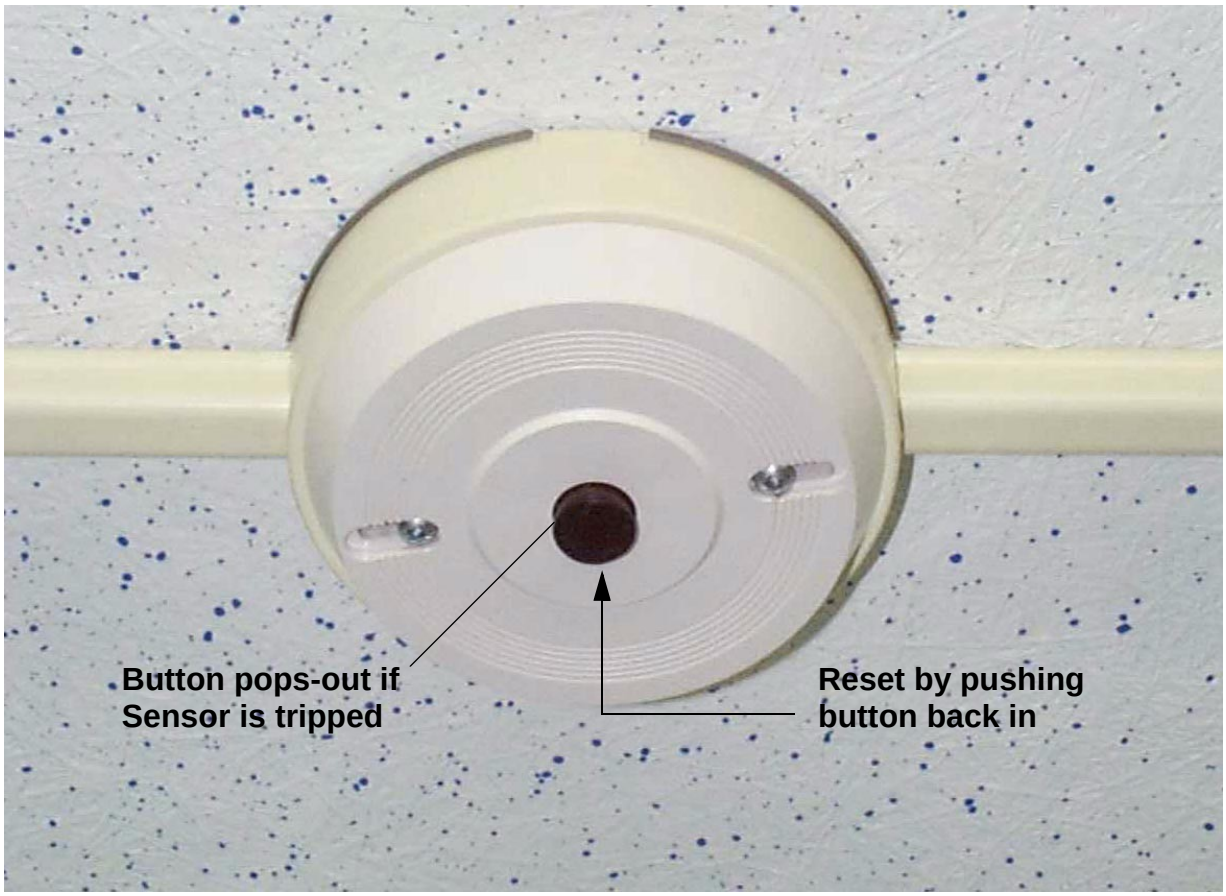

Figure 3-4 Shelter Heat Sensor

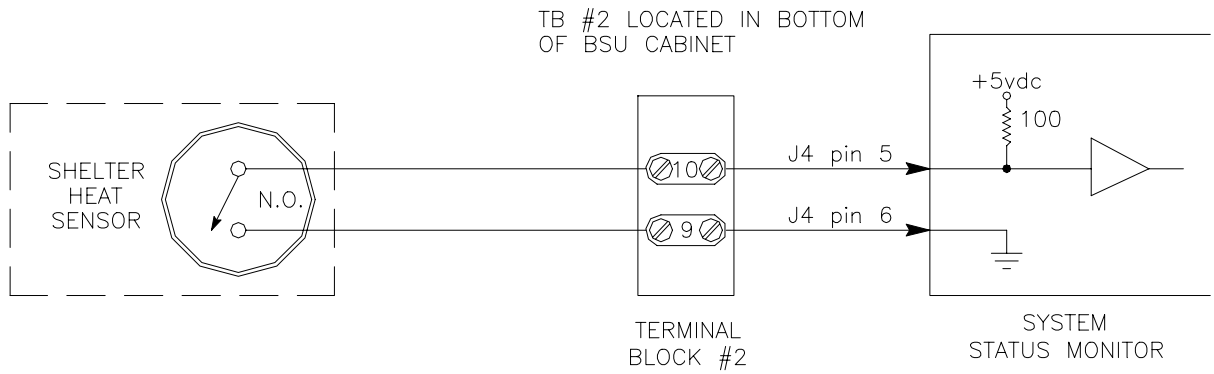

Figure 3-5 Shelter Heat Sensor Wiring Terminations

3.1.3 Environmental Control System Test

An effective method of verifying the proper operation of the environmental controls and the SSM is to simulate an "over temperature" situation inside the shelter. This activity tests both of the A/C control relays, the exhaust fan control relay, the Main Breaker Trip Control Relay, and the System Status Monitor relay driver circuits.

If the outside temperature is below 60 F (15 C), simulate outside temperatures above 60 F by unplugging the Outside Temperature Sensor from connector J10 on the rear panel of the SSM.

To simulate a condition where the inside shelter temperature exceeds 90 F (30.0 C), a heat gun can be used to heat the inside temperature probe (located on top of the BSU Cabinet, see Figure 2-4). Wave the heat gun along the top third of the inside temperature probe and gradually (over a span of 6 to 12 minutes) simulate raising the inside temperature to approximately 33 C. Hold the temperature at 33 C for another 6 to 12 minutes. The following sequence of events should occur:

1. One ECU should turn on.

2. After an interval, the second ECU should turn on.

3. Once both ECUs have turned on, unplug the inside temperature probe from it's mating connector. The following sequence of events should occur:

4. After an interval, the exhaust fan should come on.

5. After about 3 - 6 minutes, the SSM should shut down the site by tripping the Main Breaker.

   If this sequence of events occurs, the environmental control system is functioning properly. Reconnect the inside and outside temperature sensors. Note that the sensor connectors are polarized and that the sensors can only be inserted one way. Turn off Breakers #17/#19, #22, and #24, and reset the Main Breaker. Follow the standard Power Up sequence in Section 2.4.

   If this series of events does not occur, the SSM relay driver circuit or other components of the environmental control system may be faulty, and further troubleshooting will be required to isolate the problem. The following sections provide information on troubleshooting the SSM Relay Driver Circuit and the environmental control relays.

3.1.4 System Status Monitor Relay Driver Circuit

The environmental control relays are controlled by the SSM relay driver circuit (Figure 3-6) located on the Digital Interface Board inside the System Status Monitor. The circuit uses a transistor switch to activate the Solid State relays, and is typical of all wind profiler environmental control system relay driver circuits including the ECUs, exhaust fan/ louver units, and the Main Breaker Trip Control Relay.

The relay control signals produced by the driver circuits are routed from the SSM to an intermediate terminal block located in the bottom of the BSU cabinet, and then to the relay control boxes and Main Breaker Panel. Figure 3-7 illustrates the routing of the control signal wires and the configuration of the terminal block in the BSU cabinet.

3.1.5 Environmental Control Relays

The environmental control relays manage the shelter air conditioners, exhaust fan and louvers, and the main breaker trip mechanism. Two types of "Normally Open" Single Pole Single Throw (SPST) solid state relays are used. The first type is a 240 VAC, 40-amp, solid-state relay, three of which control the ECUs and exhaust fan and the Louvers motors; the other type is a 110-VAC, 10-amp, solid-state device that trips the Main Breaker. Both types of relays require input voltage between 3 - 32 VDC to actuate.

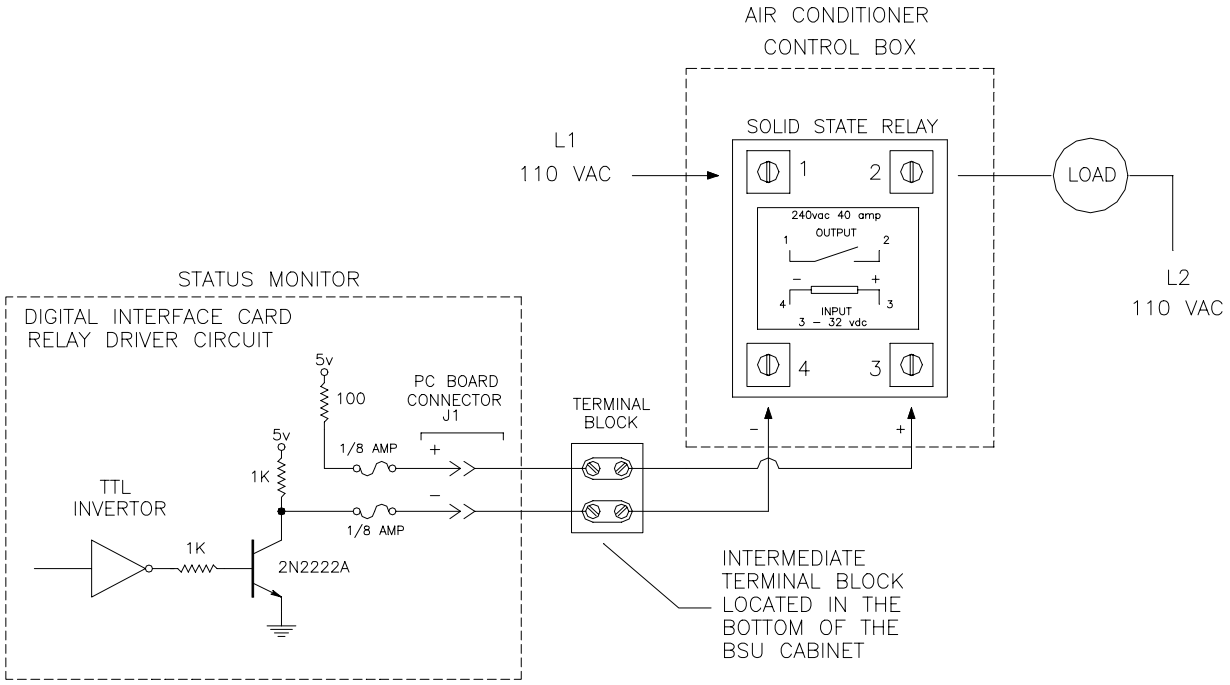

Figure 3-6 System Status Monitor Replay Driver Circuit

3.1.5.1 Air Conditioner Control Relays

The A/C control solid state relays are located inside the ECU control boxes near the air conditioner units. These relays are used to switch on and off one leg of the 220 VAC supply for the air conditioners. See Figure 3-8 for a schematic drawing of this circuit.

The positive control terminal of the relay (terminal 3) is pulled-up to +5 VDC through a 100 ohm resistor. The negative control terminal of the relay (terminal 4) is connected to a transistor which can switch voltage at terminal 4 from +5 VDC to ground (0 VDC). When a Digital Volt Meter (DVM) is used for voltage measurements at the relay control terminals, bias the meter according to the polarity of relay terminals 3(+) and 4(-).

When the SSM actuates the solid-state relay, a differential voltage of approximately +5 VDC will be present at terminals 3 and 4 of the Solid State relay. The open-circuit (no load) resistance measured between terminals 1 and 2 of the relay should be approximately 4 megohms.

When the SSM deactivates the solid-state relay, a differential voltage of approximately +0 VDC will be present at terminals 3 and 4 of the Solid State relay. The open-circuit (no load) resistance measured across terminals 1 and 2 of the relay should be greater than 8 megohms.

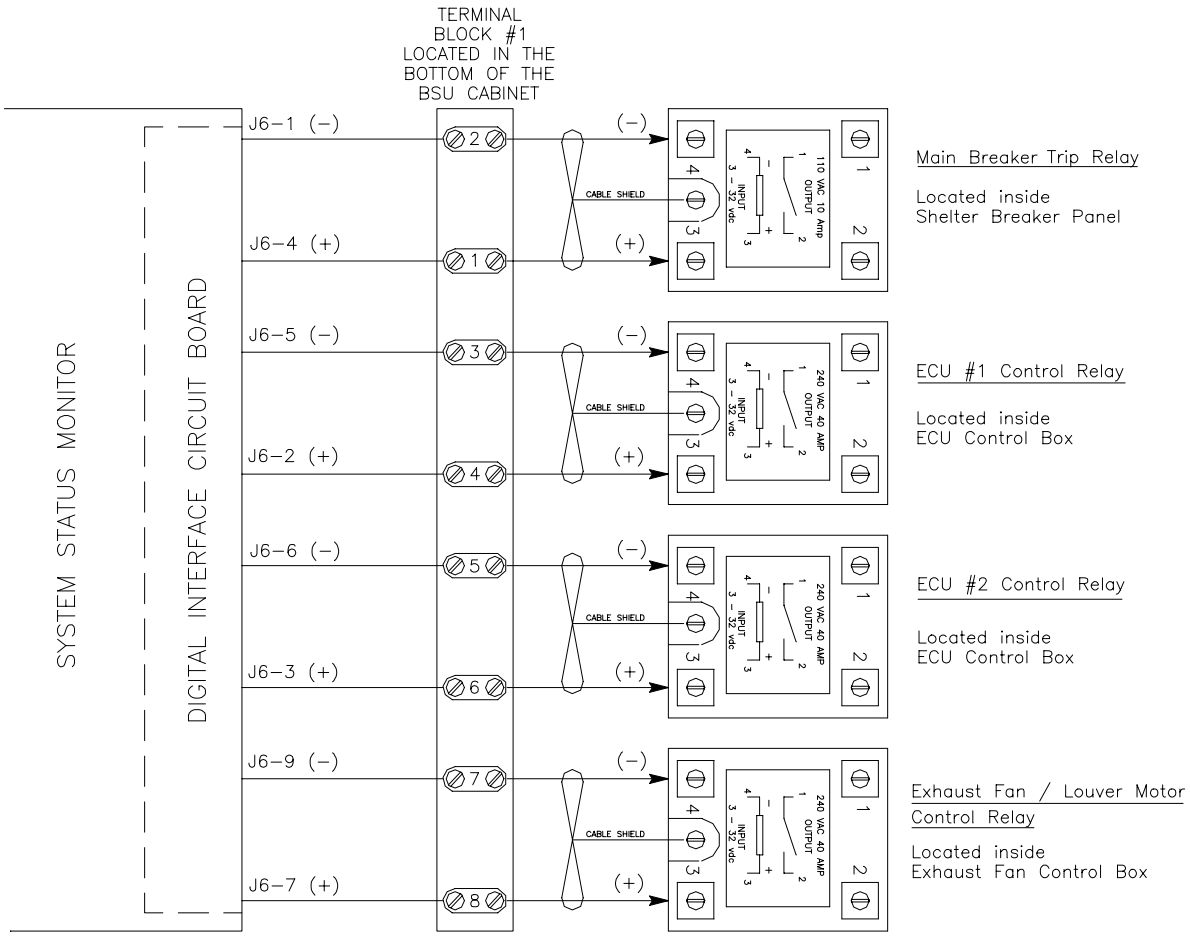

Figure 3-7 Solid State Relay Control Signal Wiring

Air Conditioner Relay Replacement Procedure

***** CAUTION *****

The air conditioner units operate on 220 VAC. Insure that the proper breaker is switched off before opening the bypass box. Air Conditioner 1 operates from Breaker #12/#14; Air Conditioner 2 operates from Breaker #9/#11. See Figure 2-9 for the breaker panel layout.

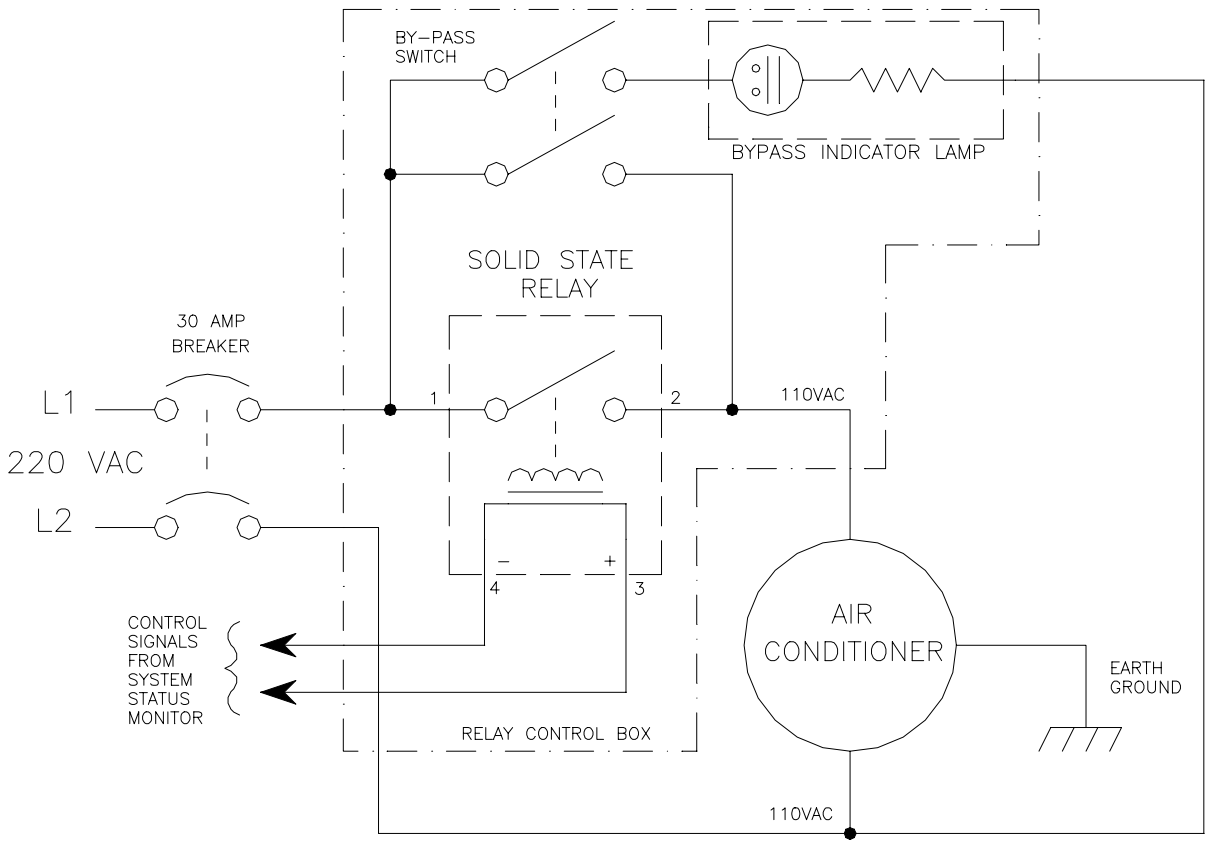

Figure 3-8 Air Conditioner Control Box Schematic Diagram

1. Unplug the air conditioner power cord from the ECU control box (see Figure 2-2 and Figure 2-3 for the locations of the control boxes). Use a DVM to confirm that no voltage is present in the box receptacle when the bypass switch, located on the ECU control box, is set to "bypass".

2. Remove the four mounting screws from the cover plate and the heatsink of the ECU control box.

3. Swing the face plate and heatsink away from the ECU control box as shown in Figure 3-9.

4. Loosen or remove the four terminal screws on the relay, and remove the power and control wires (see Figure 3-9).

5. Remove the two mounting screws from the relay and remove the relay from the heatsink.

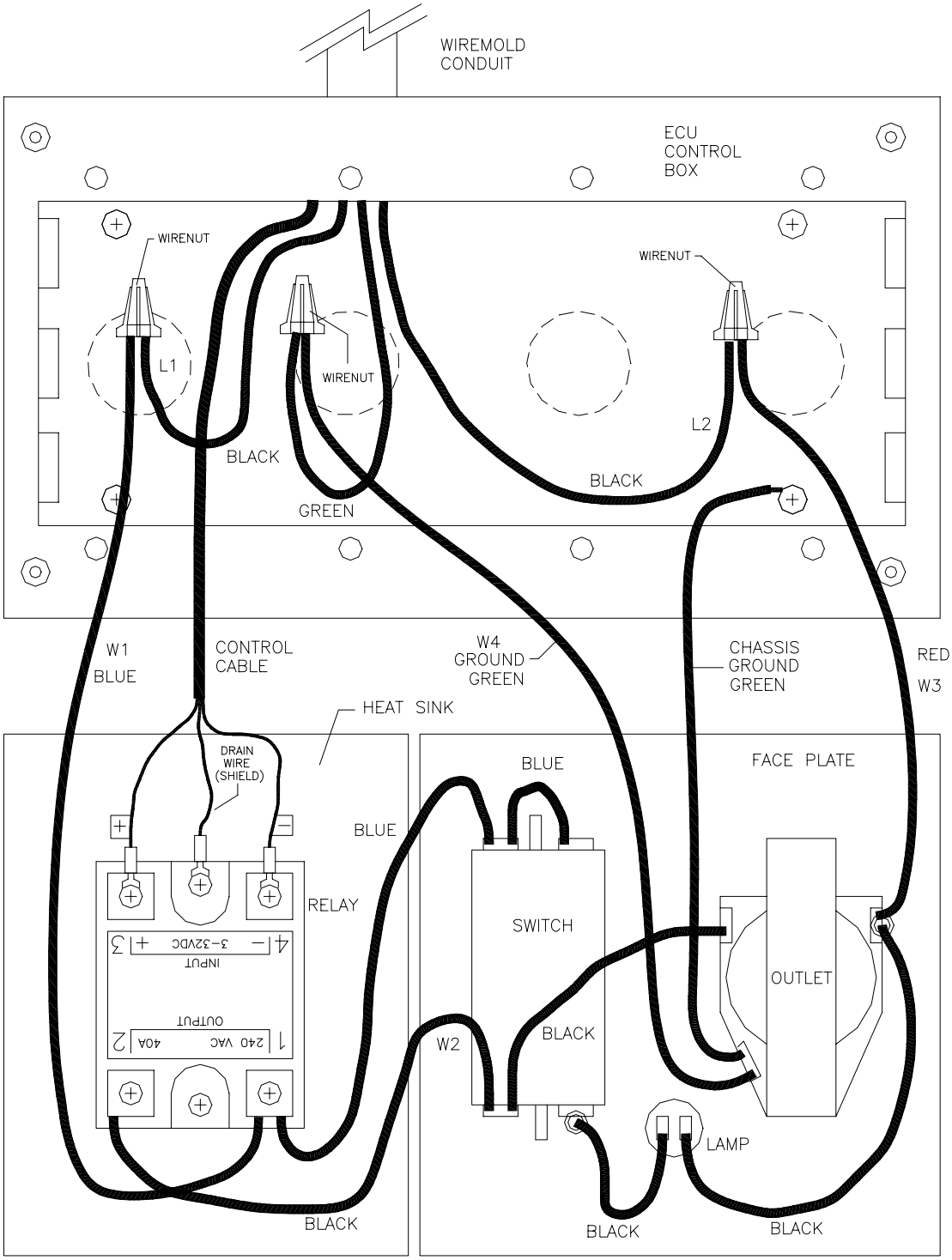

Figure 3-9 Air Conditioner Control Box Wiring Diagram

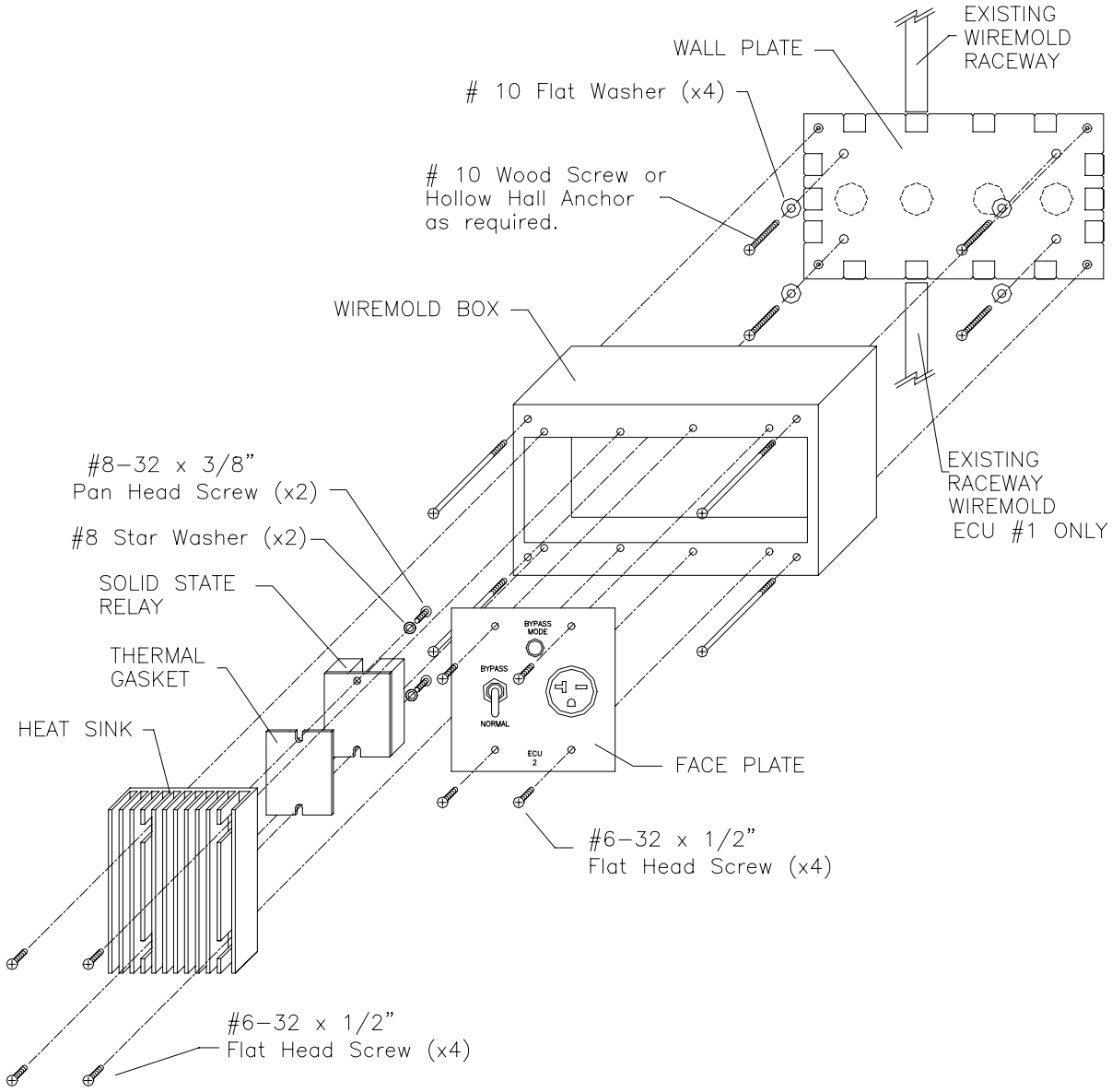

Figure 3-10 Air Conditioner Control Box Mechanical Assembly Diagram

6. Inspect the metal backing of the new relay for any irregularities or debris that may inhibit contact between the heatsink and the relay. Clean the contacting surface of the heatsink to remove any residue that may interfere with the contact.

7. Place the thermal gasket (supplied with the replacement relay) on the heatsink surface and attach the new relay to the heatsink as shown in Figure 3-10. Be sure to tighten the relay's mounting screws securely.

8. Connect the control and power wires to the relay.

9. Replace the face plate and heatsink on the ECU control box and reconnect the air conditioner.

10. Turn on Breaker #12/#14 for A/C #1, and/or Breaker #9/#11 for A/C # 2.

11. Place the bypass switch in the "bypass" position to ensure that the A/C unit functions properly. Place the bypass switch in the NORMAL setting when proper operation is verified. After an air conditioner is switched off, it should remain off for at least 5 minutes to prevent a short cycle condition that will trip the ECU's circuit breaker due to a excessive current load.

12. Verify computer control of the ECU by performing the Environmental Control System Test described in Section 3.1.3.

3.1.5.2 Exhaust Fan and Louvers Motor Relay

The exhaust fan and louvers motor relay is controlled by the System Status Monitor (SSM) and switches the 110 VAC supply required by the exhaust fan temperature controller and the two louver motors. The relay is located inside the exhaust fan control box on the wall next to the BSU cabinet (see Figure 2-4). Figure 3-11 is a schematic diagram of the exhaust fan control system.

Exhaust Fan and Louvers Relay Replacement Procedure

***** CAUTION *****

The Cooling Fan and Louvers operate on 110 VAC. Insure that Breaker #13 is switched *OFF* before opening the Bypass Box.

1. Remove four mounting screws from the cover plate of the bypass box.

2. Swing face plate away from bypass box.

3. With the switch in the "bypass" position, use a DVM to confirm there is no AC voltage present anywhere in the circuit.

4. Loosen or remove (if necessary) the four terminal screws on the relay and remove power and control wires.

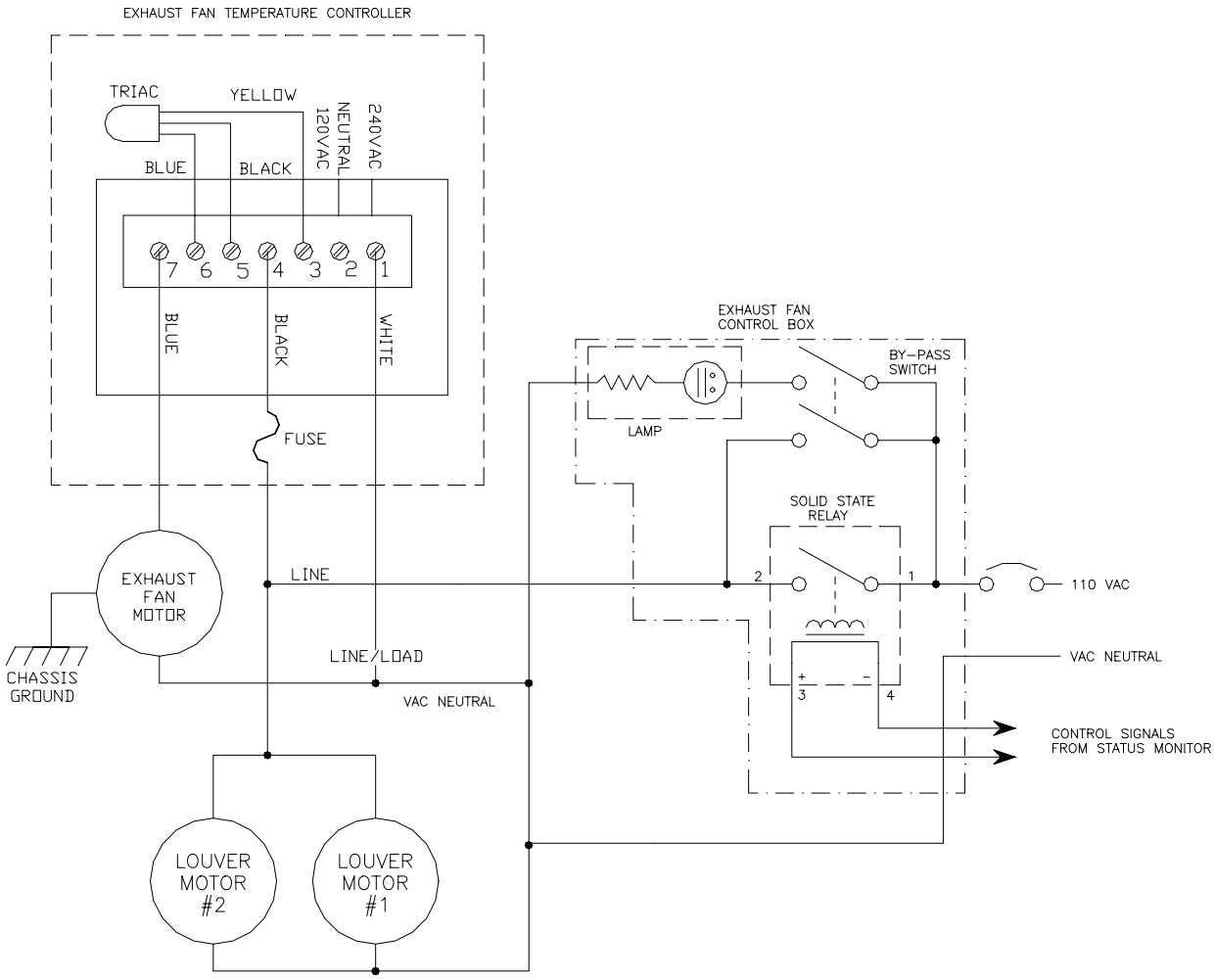

Figure 3-11 Exhaust Fan/Louver Control System Schematic Diagram

5. Remove the two mounting screws from the relay and remove relay from bypass box.

6. Connect the control and power wires to the relay prior to mounting the relay in the bypass box (see Figure 3-12 for a wiring diagram).

7. Mount the relay in the bypass box and fasten into position.

8. Replace face plate on bypass box.

9. Turn on Breaker #13.

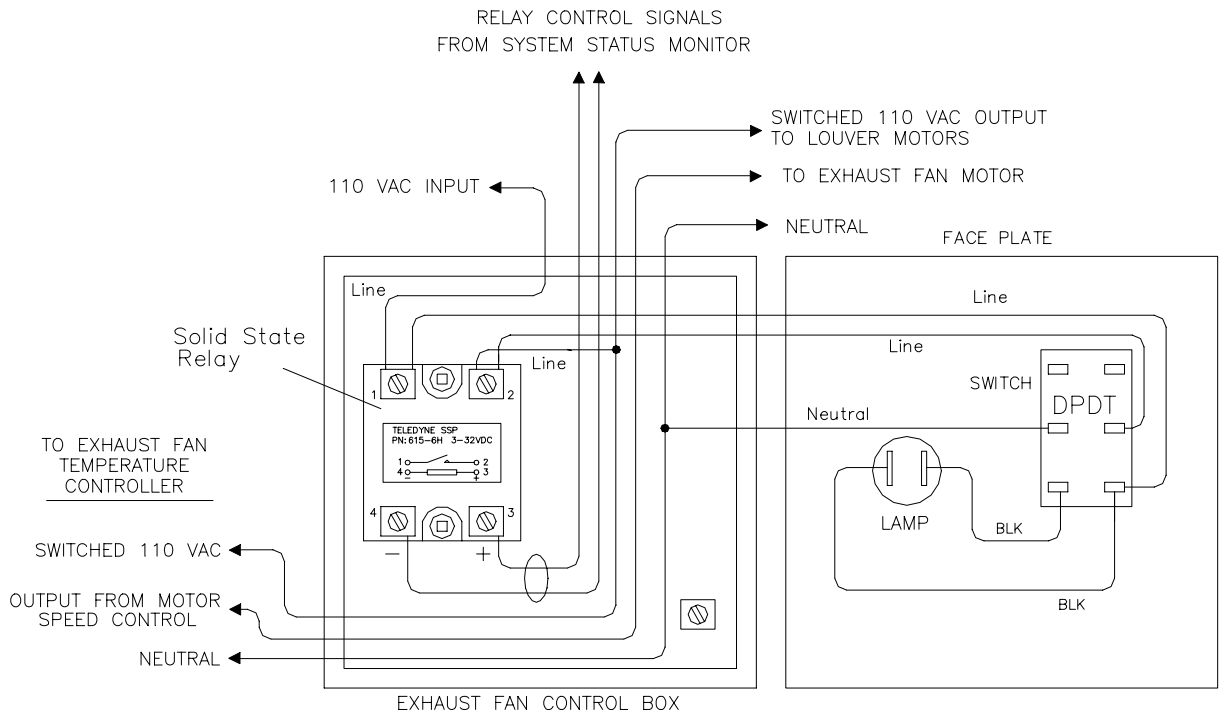

Figure 3-12 Exhaust Fan/Louver Control Box Wiring Diagram

10. Switch to bypass mode to test for proper operation.

11. Switch bypass switch to normal mode.

3.1.5.3 Main Breaker Trip Control Relay

The Main Breaker Trip Control Relay is located inside the Circuit Breaker Panel (see Figure 2-21). When the SSM senses a shelter over temperature, a smoke alarm, or a flooding condition, it energizes a shunt coil internal to the main breaker with 110 VAC, tripping the Main Breaker. Figure 3-13 is a schematic diagram of the Main Breaker Trip Control Relay circuit.

Main Breaker Trip Control Relay Replacement Procedure

1. Follow the standard power down sequence described in Section 2.3, then turn off the Main Breaker.

2. Remove the six mounting screws from the front of the Circuit Breaker Panel, and remove the panel.

***** CAUTION *****

Replacement of the Main Breaker Control Trip Relay requires the removal of the main breaker cover panel. For SAFETY, the main breaker must be *OFF* for this procedure. A flashlight or other means of lighting will be needed because the shelter interior lights will not be available once the main breaker has been turned off. Note that the shelter door can be propped open to allow light into the shelter.

3. Locate the solid-state relay on the inner left side of the breaker box. (see Figure 2-21). Remove the mounting screws from the relay and remove the device.

4. Disconnect the control cable and the power wires from the relay.

5. Reconnect the control cable and power wires to the new relay at the same terminals as the original relay.

6. Mount the new relay in the breaker box.

7. Replace the circuit breaker cover panel.

8. Turn on the Main Breaker following the standard Power Up sequence described in Section 2.4.

9. Perform the Environmental Control System Test described in Section 3.1.3 to verify proper operation of the Main Breaker Trip Control Relay.

3.1.6 Exhaust Fan Temperature Controller

The Exhaust Fan Temperature Controller (EFTC) controls how fast the exhaust fan motor turns at a given shelter temperature. The SSM monitors the internal shelter temperature (using the Inside Temperature Sensor as the reference), and uses the exhaust fan relay to activate the EFTC when the outside temperature falls below 60 F (15 C) and the inside temperature is outside of a predetermined range. The EFTC, illustrated in Figure 3-14, is located on the wall of the shelter next to the BSU cabinet (see Figure 2-4).

The speed of the exhaust fan is determined by the internal temperature and the settings of two potentiometers: TEMP and IDLE. The TEMP adjustment sets the temperature threshold "turn-off" point that is measured by an integral temperature sensor located just below the EFTC behind the RF shield. The IDLE adjustment determines how fast the fan

spins after the motor has turned on. Under normal circumstances, the TEMP adjustment is set to 65 F (18 C) and the IDLE adjustment is set to maximum.

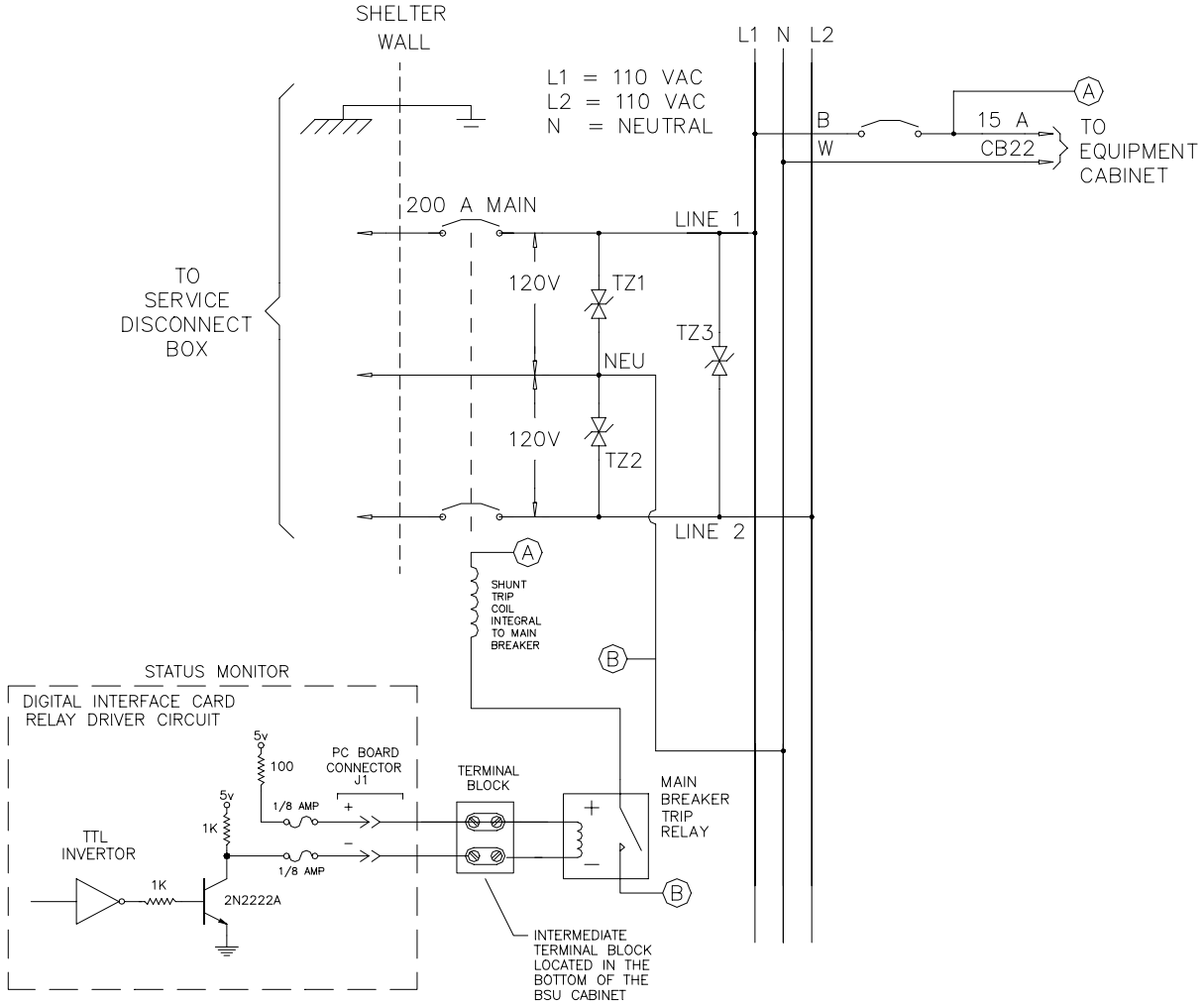

Figure 3-13 Main Breaker Trip Replay Circuit Schematic Diagram

Exhaust Fan Temperature Controller Replacement Procedure

1. Turn off Breaker #13.

2. Remove the four screws (designated "A" in Figure 3-14) that hold the cover of the Phason controller to its case.

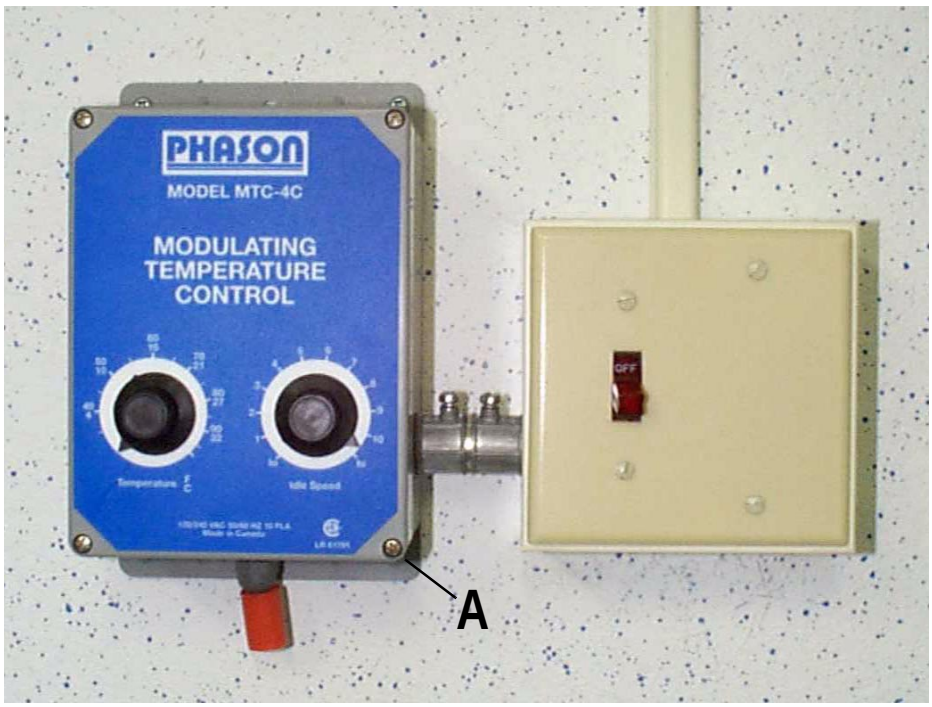

Figure 3-14 Exhaust Fan Temperature Control Unit

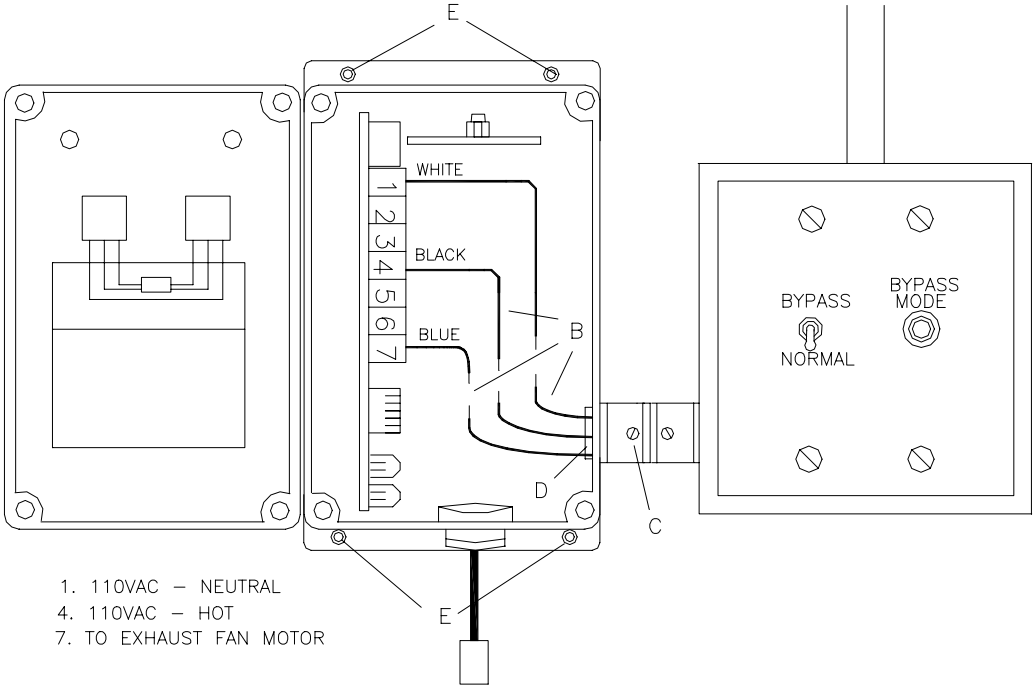

Figure 3-15 Exhaust Fan Control Unit Wiring Diagram

3. Find the three wires (designated "B" in Figure 3-15) that connect the fan motor and the Fan Control Unit Terminal Strip. Note the colors and connections between these wires and the wires routed into the bypass box next to the Phason controller.

4. Remove the wire nuts and the electrical connections to the three wires.

5. Loosen the set screw and the assembly nut (designated "C" and "D", respectively, in Figure 3-15).

6. Remove the assembly nut and assembly conduit.

7. Remove the four screws (designated "E" in Figure 3-15) that hold the unit to the wall and remove the EFTC.

8. Mount and secure the new EFTC to the wall.

9. Reinstall the assembly conduit and assembly nut, and tighten the assembly nut as shown in Figure 3-15.

10. Tighten set screw "C" in Figure 3-15.

11. Re-connect the wires on the new fan motor to the wires on the Fan Control Unit Terminal Strip.

12. Replace the cover plate and adjust the TEMP setting to 65 F (18 C) and the IDLE setting to maximum.

13. Turn on Breaker #13.

14. Turn on the bypass switch to "BYPASS, then back to NORMAL to ensure the exhaust fan motor operates.

3.2 Louver Assemblies

The shelter is equipped with two louver assemblies located by front and rear doors of the shelter (see Figure 2-2 and Figure 2-5). The louvers are opened by the louver motors when the exhaust fan is running, and closed tightly when the exhaust fan is off. Figure 3-16 depicts a side view of the louver assembly and its components. Figure 3-17 shows the shelter intake louver assembly. Figure 3-18 shows the shelter exhaust fan motor (the exhaust louver is hidden from view by the exhaust fan assembly). Figure 3-19 provides a close-up view of the louver motor and actuator assembly.

Figure 3-16 Typical Shelter Louver and Actuator Assembly

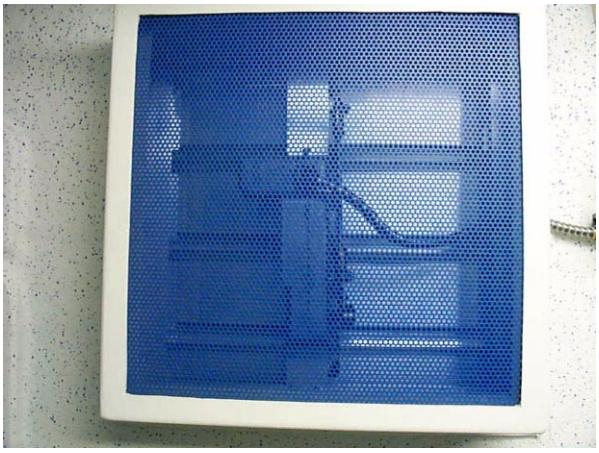

Figure 3-17 Intake Louver Assembly

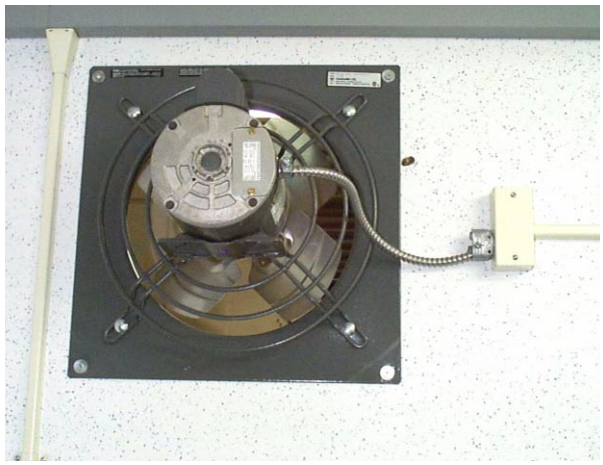

Figure 3-18 Exhaust Fan

Figure 3-19 Louver Motor Assembly (both Intake and Exhaust)

3.2.1 Common Failures of Louver Assemblies

Since the actuation of the louvers is mechanical, the assembly is prone to failures. The most common modes of failure include:

- The louver motor arm, universal joint, or retaining bolt becomes loose over a period of time (see Figure 3-19).
- The louver motor arm breaks where it is attached to the motor shaft (see Figure 3-19).
- The louver motor fails (see Figure 3-19).

Proper operation of the louvers is critical to the environmental control of the shelter temperature, especially during the winter months. Therefore, it is necessary to inspect the mechanical integrity of the louver assemblies at each 6-month preventive maintenance cycle. It is recommended that the louver assemblies be tested during each site visit. The louver assemblies can be tested by temporarily switching the shelter exhaust fan to BYPASS mode and visually verifying that both louvers open while the fan is running and close tightly when the switch is returned to NORMAL mode.

3.2.2 Louver Assembly Repair Procedures

The following procedures describe how to access and replace the various components of the louver assemblies and how to test the louver assemblies for proper operation.

Accessing the Louver Assemblies

To gain access to the intake louver assembly, remove the intake filter from the fiberglass housing and remove the grill from the front of the housing.

Gaining access to the exhaust louver assembly requires removing the shelter exhaust fan from the wall. To remove the exhaust fan from the wall, perform the following procedure.

1. Turn off breaker # 13 at the shelter breaker panel.
2. Remove the cover from the junction box located next the exhaust fan.
3. Disconnect the exhaust fan's AC power wires inside the junction box.

4. Remove the setscrew which fastens the flexible conduit to the junction box and remove the conduit from the junction box.

5. Remove the mounting screws of the exhaust fan and remove the entire assembly from the wall.

Louver Motor Arm Replacement Procedure

If the louver motor arm has failed, install the new louver motor arm, install the retaining ring, and connect the universal joint. Test the operation of the louver assembly by restoring AC power and temporarily turning the exhaust fan to BYPASS mode. The tie rod or universal joint may need to be adjusted for proper operation.

Louver Motor Replacement Procedure

1. Turn off breaker # 13 on the shelter breaker panel.

2. Remove the cover from junction box located next the louver assembly (if not already done in the previous procedure).

3. Disconnect the AC power wires for the louver motor inside the junction box.

4. Loosen the louver motor arm retaining bolt and universal joint and remove the arm from the shaft of the motor.

5. Remove the mounting screws for the louver motor and remove the motor.

6. Install the new louver motor and replace the mounting screws.

7. Replace the louver motor arm on the motor shaft and re-install the universal joint and retaining bolt.

8. Reconnect the AC power wires inside the junction box.

9. Turn on breaker # 13 and test the operation of the new louver motor by restoring AC power and temporarily turning the exhaust fan to BYPASS mode. The tie rod may need to be adjusted for proper operation.

10. If required, re-mount the exhaust fan assembly and reconnect the AC power wires inside the junction box, or, replace the Intake Louver grill and filter.

11. Replace the cover on the junction box next to the louver assembly.

3.3 Environmental Control Units (ECU)

The shelter is equipped with two ECUs (air conditioners) to provide cooling when the outside temperature rises above 15o C (60o F). The ECUs are commercial grade 22,000 BTU window-mount units manufactured by Gibson. The model number of the unit currently used is GAS228W2A (with AC plug style 3).

The System Status Monitor controls the ECUs through solid state relays that switch the 220 VAC line voltage to each unit. The control settings on the ECUs should be positioned so that the units provide their maximum continuous cooling capability.

3.3.1 Replacement Procedure

***** WARNING *****

The ECUs weigh in excess of 150 lbs. Removal and installation of an ECU requires two people to lift the unit!

1. Unplug the ECU's AC power cable from the ECU control box.

2. Remove the plastic face plate from the ECU.

3. Locate the pull-handle on the ECU and pull the unit out of the housing partially. Position two people to support and lift the unit, and remove the faulty ECU from the shelter.

4. Carefully remove the new ECU from its packaging. Do not mutilate the shipping packaging so it can be used to ship the old ECU back to the PPO in Boulder, CO (assuming the failed ECU can be repaired).

5. Remove the housing from the new ECU. The housing will not be used because the housing from the original ECU is permanently fastened to the shelter opening where the new ECU will be installed.

6. Prior to installing the new ECU in the shelter, clean out any debris from the grills and air filters of the ECU housing inside the shelter.

7. Install the new ECU in the shelter, but do not attach the plastic face plate or plug in the AC power cord. Refer now to step 3 of the Hard-Start Kit Installation procedure (see Section 3.3.2).

3.3.2 Hard-Start Kit Installation Procedure

The purpose of the Hard-Start Kit is to help minimize the start-up current draw of the ECU's compressor. ECUs without Hard-Start kits are likely to trip their circuit breaker during high-use periods of the summer months.

Parts Required:

Two (2) SPP-6 Super-Boost Kits

Special Tools Required:

Square head screwdrivers (Canadian Style), Size #2 and #3
Assorted sizes of Phillips and flat blade screwdrivers, Size #2 and #3
Pliers (regular and needle-nose).

***** Note *****

Do not turn off both air conditioners at the same time. Install the Hard-Start kits on one ECU at a time to maintain adequate temperature inside the shelter.

1. Turn off the ECU's circuit breaker. Unplug the ECU's AC power cord.

2. Remove the plastic front cover and air filter from the ECU as shown in Figure 3-20.

3. Pull the ECU out from the wall approximately eight inches using the handle located on bottom front of unit.

4. Remove the control knobs (i.e. Air Sweep, Fan Setting, Temperature) from the control panel of the ECU.

5. Remove the screws that fasten the control panel plate to the chassis (see Figure 3-21).

6. Remove the nut that fastens the louver base to the chassis (see Figure 3-21).

7. Disconnect the air sweep mechanism connected to the louver motor cam (see Figure 3-21).

8. Free the thermostat sensor from the front of the cooling coils, be careful not to kink or damage the thermostat tubing.

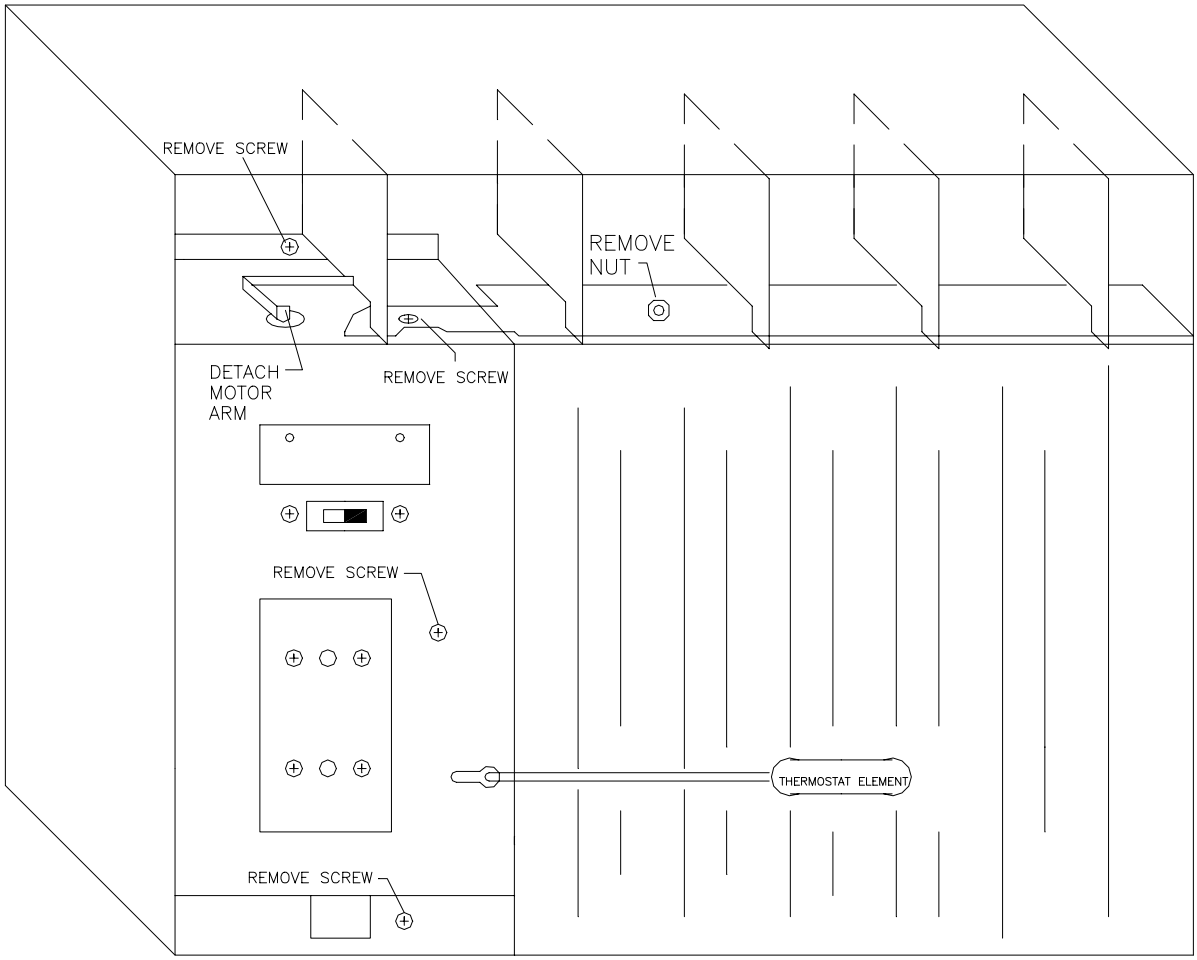

Figure 3-20 ECU with Front Cover Panel and Air Filter Removed

9. Pull the control panel out gently while lifting the air sweep louver to allow the control panel flange to slide under the air sweep mechanism.

10. The ECU starting capacitor is located behind the control panel (see Figure 3-21). The starting capacitor has three terminals, a brown wire is connected to the first terminal, two red wires and one white wire are connected to the center terminal, and one white wire is connected to the third terminal (see Figure 3-22).

11. Connect one lead of Hard-Start Kit to the terminal with the single white wire, and connect the other lead of the Hard-Start Kit to the terminal with the two red wires and one white wire, as shown in Figure 3-22.

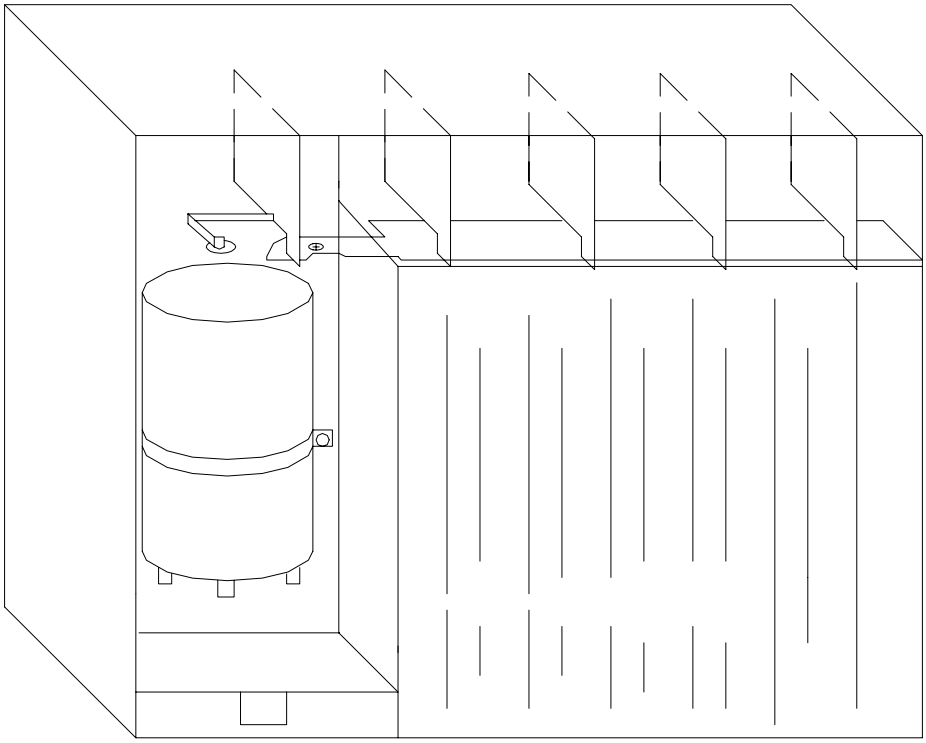

Figure 3-21 ECU Cover Plate Removed to access the Starting Capacitor

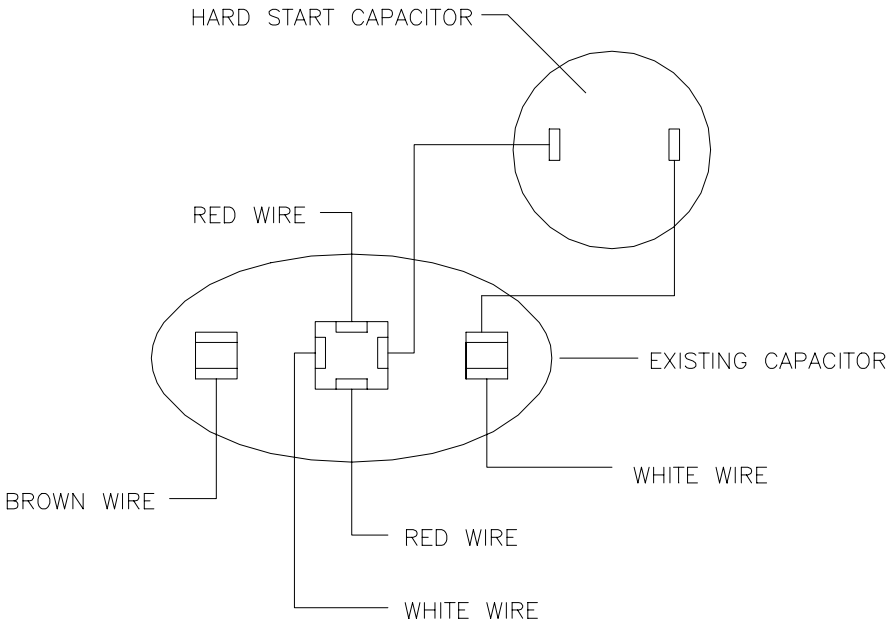

Figure 3-22 ECU Hard-Start Kit Wiring Diagram

12. Attach an adhesive cable tie mount to the inside of ECU chassis and mount the hard start kit with a nylon cable tie as shown in Figure 3-23.

13. Re-assemble the control panel, louver sweep arm, and thermostat sensor.

14. Re-install the control knobs, the air filter, and the plastic front cover.

15. Push the ECU back to its normal position in the shelter wall.

16. Plug the AC power cord into the ECU control box, and turn on the ECU circuit breaker.

17. Test the ECU by switching the ECU control box to BYPASS mode.
18.

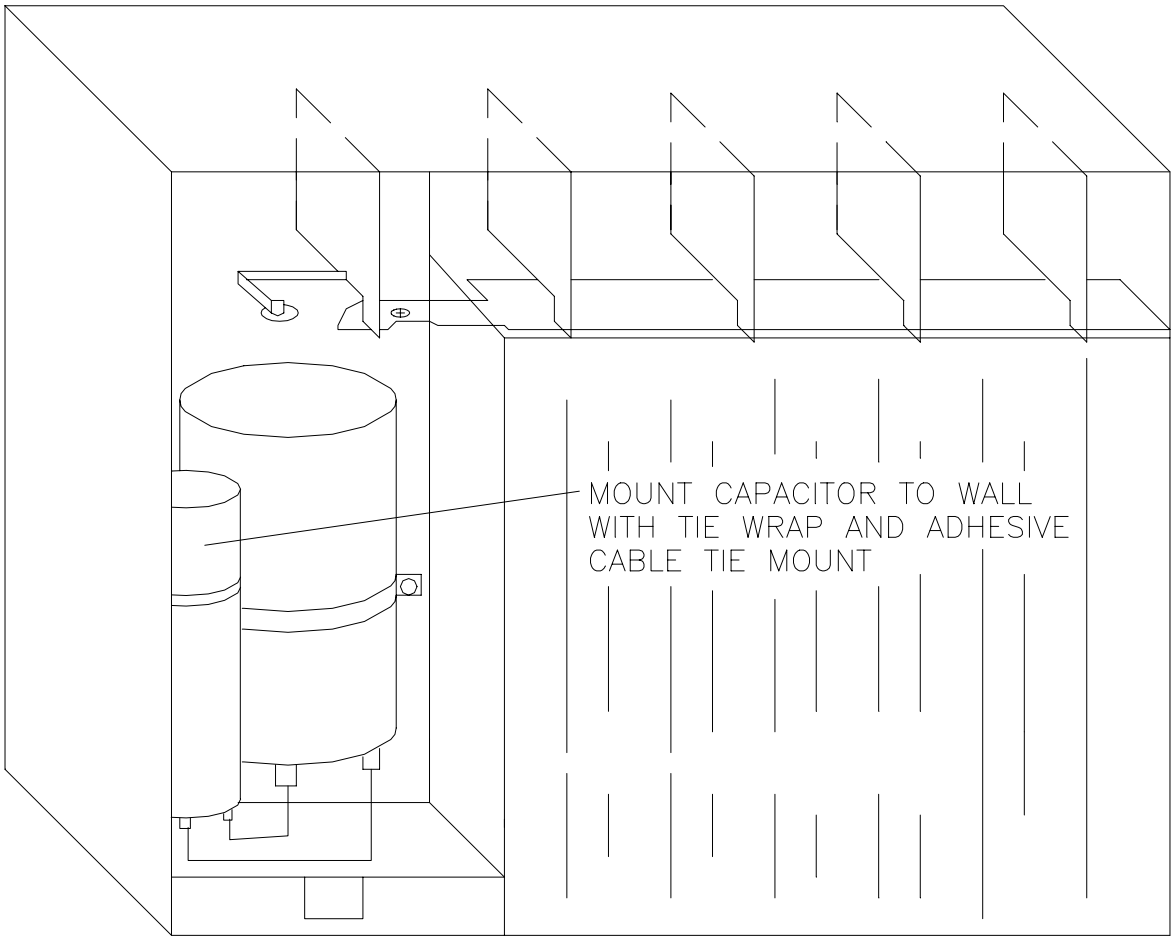

Figure 3-23 Mounting the Hard-Start Kit Inside the ECU

3.4 Smoke Detectors

The shelter is equipped with two smoke detectors located on either side of the heat sensor on the ceiling of the shelter (see Figure 2-6 and Figure 3-24). The smoke detectors are powered by +28 VDC from Power Supply #2 located in the Equipment cabinet (see Figure 2-4). The smoke detectors contain “normally open" SPST switches that are wired in parallel to common lines monitored by the SSM. Figure 3-25 is a schematic diagram of the smoke detectors and SSM wiring terminations.

To assure that the detector is functioning, a pulsing LED (six times per minute) allows for visual supervision of the detector. Under alarm condition, the LED lights constantly at full brilliance.

If one or both of the smoke detectors is triggered, the closing of the SPST switch is detected by the SSM, which (after a 30 second delay) powers down the profiler by activating the Main Breaker Trip Control Relay as described in Section 3.1.5.3.

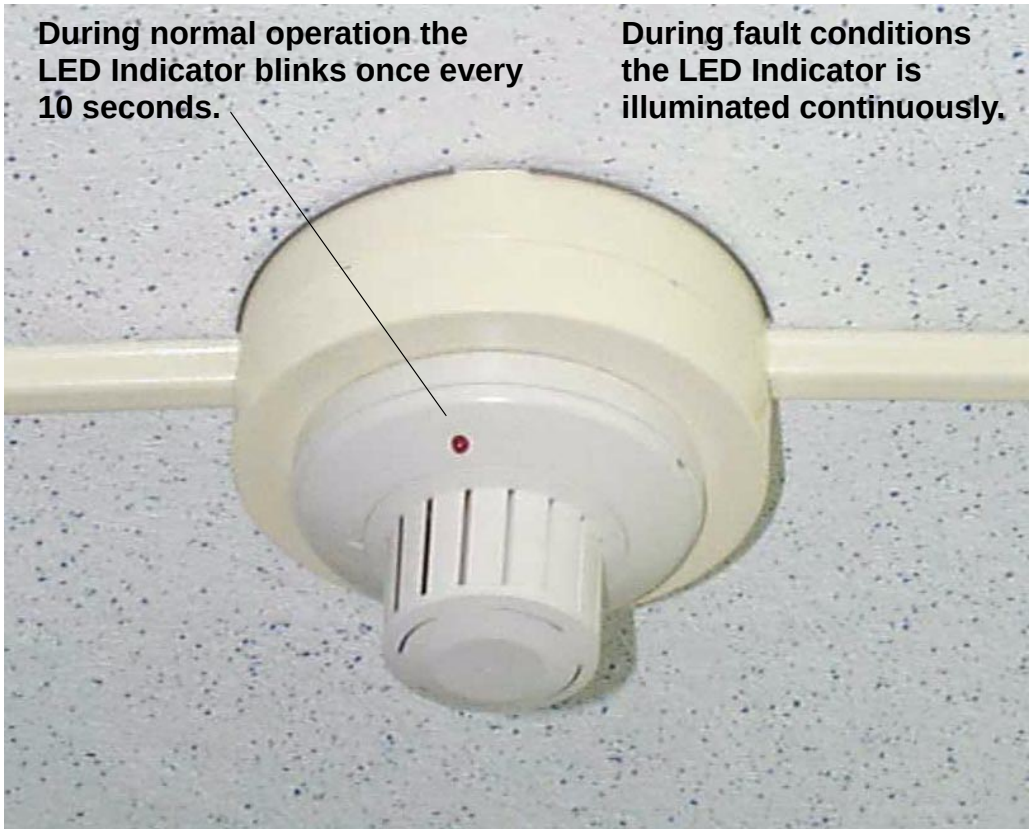

Figure 3-24 Shelter Smoke Detector

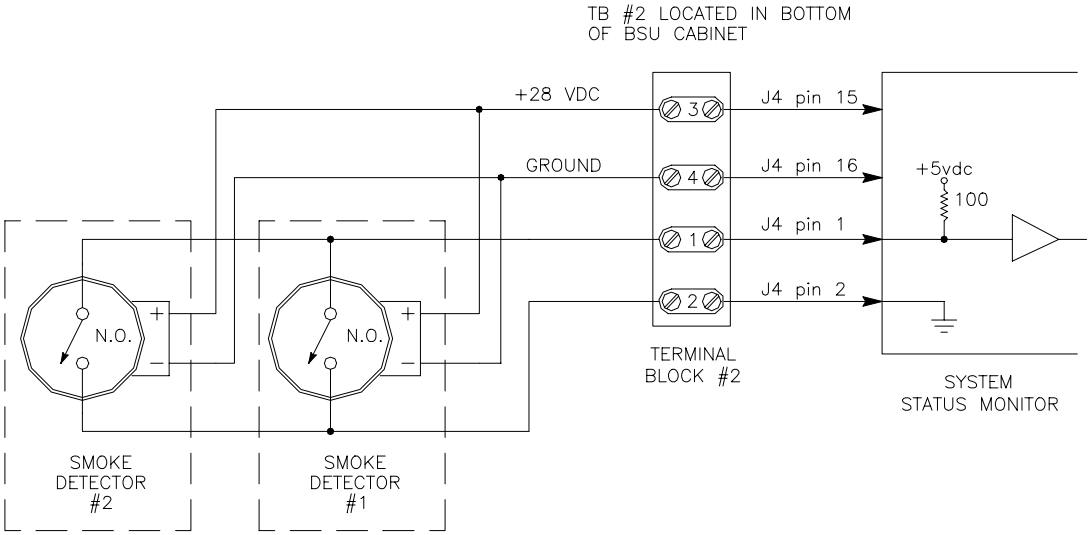

Figure 3-25 Shelter Smoke Detector Schematic Wiring Diagram

3.5 Flooding Sensor

The shelter is equipped with a flooding sensor mounted at floor level inside the Equipment Cabinet. The sensor is a normally "open" SPST switch actuated by a float mechanism and monitored by the SSM. Figure 3-26 is a schematic diagram of the flooding sensor and SSM wiring terminations. Refer to Figure 2-4 for the location of the Equipment Cabinet in the shelter.

If the flooding sensor is triggered, the closing of the SPST switch is detected by the System Status Monitor and the SSM will immediately power down the profiler by activating the Main Breaker Trip Control Relay as described in Section 3.1.5.3.

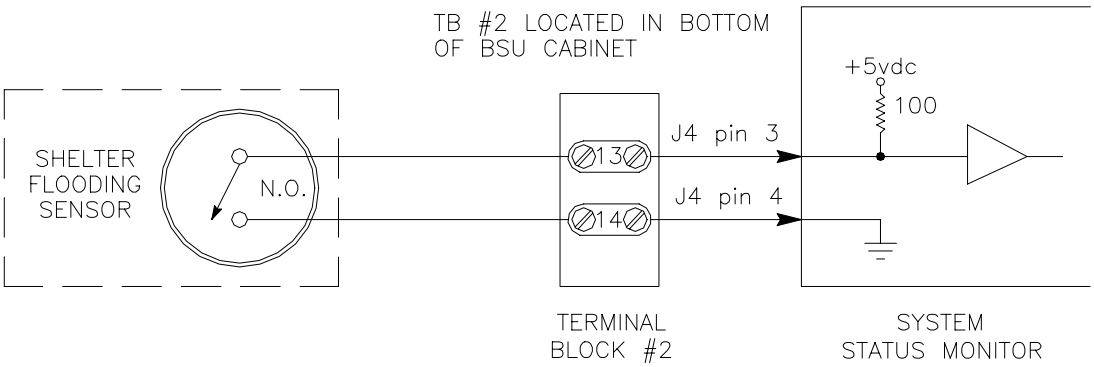

Figure 3-26 Flood Sensor Schematic Wiring Diagram

3.6 Shelter and Antenna Field Access Alarms

The front and rear doors of the shelter and the gate to the fence enclosing the profiler antenna field are equipped with access sensors monitored by the SSM. The sensors are two-part magnetic reed switches that are "closed" when the doors or gate are closed. Figure 3-27 is a schematic diagram of the access sensors and wiring terminations to the SSM.

3.6.1 Access Alarm Reporting

When any of the access sensors are tripped, the event is detected by the SSM, which logs it in its Fault Log and transmits the alarm to the Profiler Control Center Hub in Boulder, Colorado. Additional entries will be made every 6 minutes until the access alarm is cleared using the Profiler Maintenance Terminal (PMT) located in each shelter.

While at the site, it is acceptable to temporarily "jumper" the front door sensor to prevent the Fault Log from filling with "Shelter Access Alarms" after the Hub has been notified of the site visit. **DO NOT LEAVE THE FRONT DOOR SENSOR JUMPERED WHEN YOU LEAVE THE SITE.**

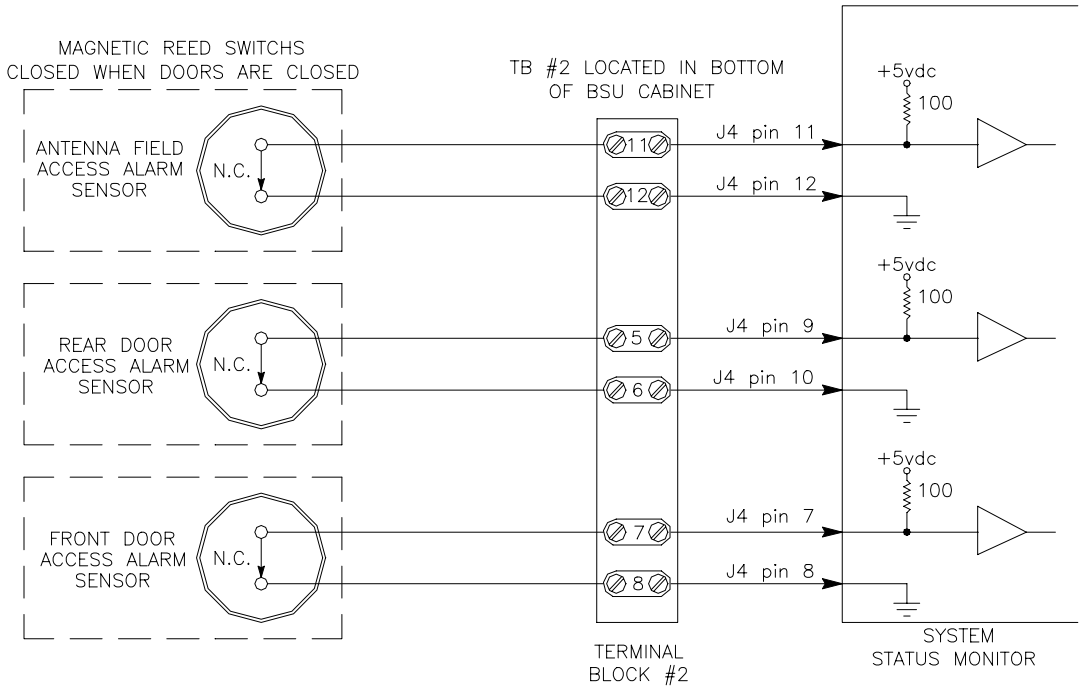

Figure 3-27 Access Alarm Schematic Wiring Diagram

3.6.2 Effects of Access Alarms

If any of the access sensors are tripped, an access alarm is filed in the Fault Log of the SSM and the event is transmitted to the Hub in Boulder, CO.

If the shelter rear door or the antenna fence gate is opened while the profiler is operating, the SSM will immediately disable the transmitter. If access to the antenna field is necessary, the profiler should be placed in Maintenance mode to inhibit the transmitter prior to entering. The alarm must be cleared using the procedure described in the next section before returning the profiler to Operational mode.

3.6.3 Resetting Access Alarms

An access alarm can be reset using the PMT while the profiler is in either Operational or Maintenance mode. Boot the PMT and select the Status Monitor Reset Menu from the Main Menu; options for immediate and 5-minute delayed reset are available.

The 5-minute delayed reset is most useful when vacating the site because it allows sufficient time to log off the profiler, unplug the PMT power and data cables, stow the PMT, turn off the lights, exit the shelter, and lock the shelter door.

4 Equipment Cabinet

The Equipment Cabinet is located in the corner of the Wind Profiler Shelter Assembly opposite both shelter access doors (see Figure 2-1 and Figure 2-4). Front and rear views of the Equipment Cabinet are presented in Figure 4-1 and Figure 4-2, respectively.

The Equipment Cabinet contains the following items: the RF Generator, also referred to as the Exciter; the Forward Power Sensor; the Diode Detectors; the Data Processor Assembly; the Signal Processor Assembly; the System Status Monitor (SSM), also referred to as the Status Monitor Assembly; two drawers containing Power Supplies #1 and #2; and the AT&T Paradyne Data Service Unit (DSU) that provides the profiler 6-minute data link with the Profiler Control Center Hub in Boulder, Colorado. The DSU is Contractor Furnished Equipment (CFE) that is maintained under a contract with AT&T Paradyne Communications.

4.1 RF Generator

As seen in Figure 4-1 and Figure 4-2, the RF Generator is located near the top of the Equipment Cabinet, just below the air filter panel.

The RF Generator Local Oscillator (LO) and Coherent Oscillator (COHO) output two fixed frequency signals used by the profiler receiver. A third 404.37 MHz signal is created by mixing the LO and COHO frequencies to provide the RF Input signal for the radar transmitter.

RF Generator Replacement Procedure

***** WARNING ***** Profiler communications equipment (the DSU) rest on top of the RF Generator behind the air filter panel. Remove the air filter panel above the RF Generator before attempting to pull the RF Generator out from the Equipment Cabinet as shown in photo to right.	

1. Follow the standard power-down sequence described in Section 2.3.

2. Remove the air filter panel above the RF Generator from the front of the Equipment Cabinet.

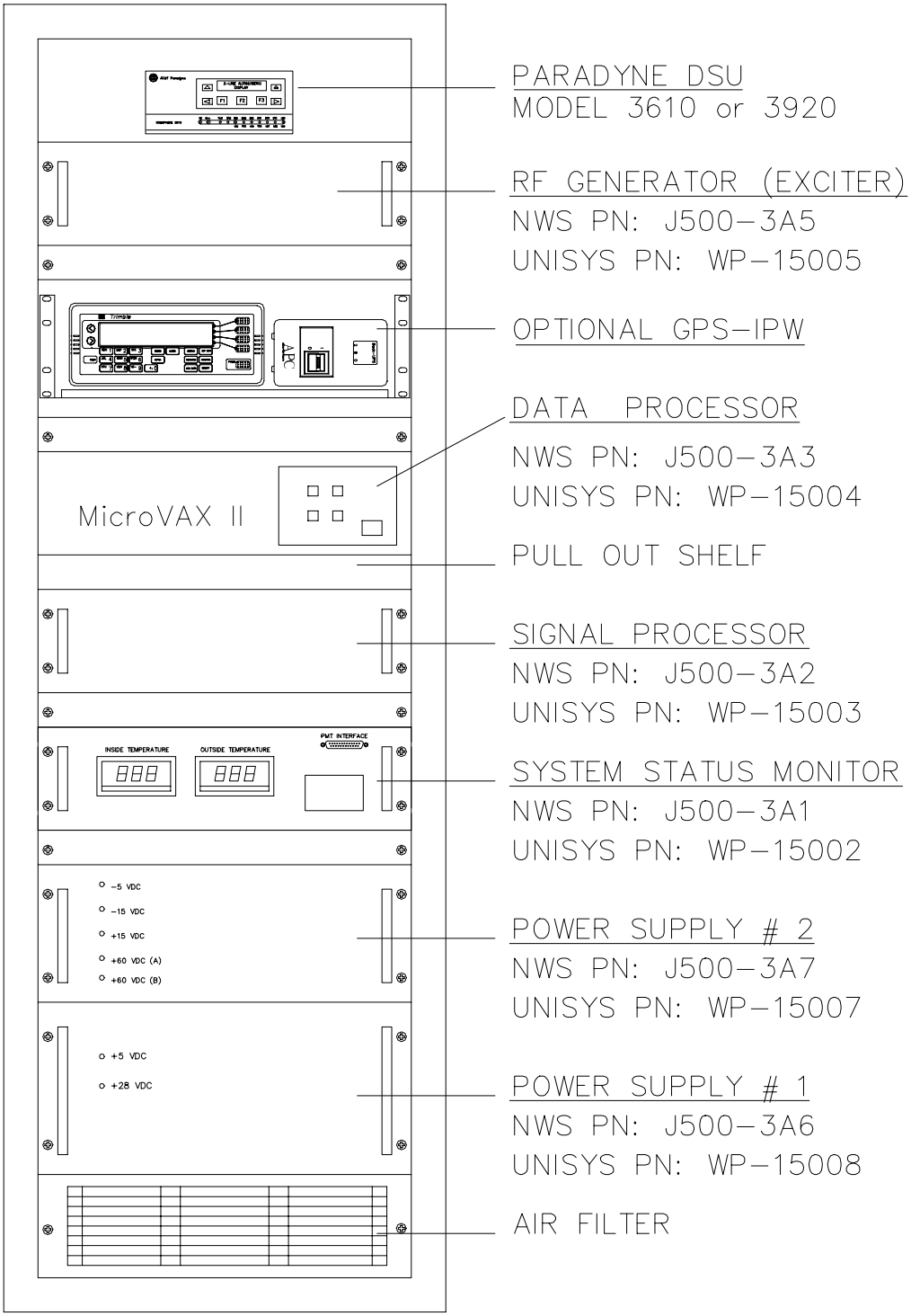

Figure 4-1 Equipment Cabinet Front Panel View

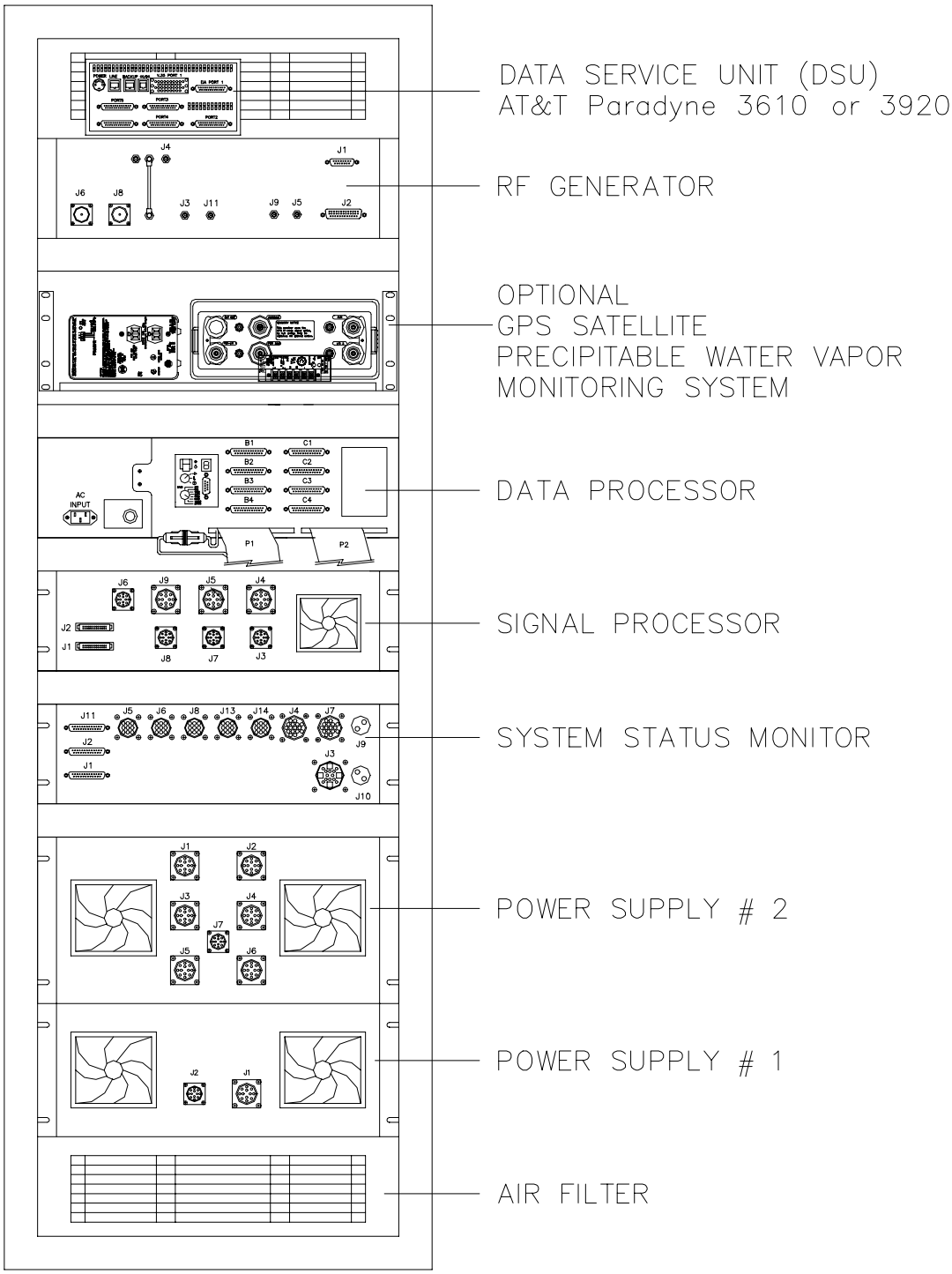

Figure 4-2 Equipment Cabinet Rear Panel View

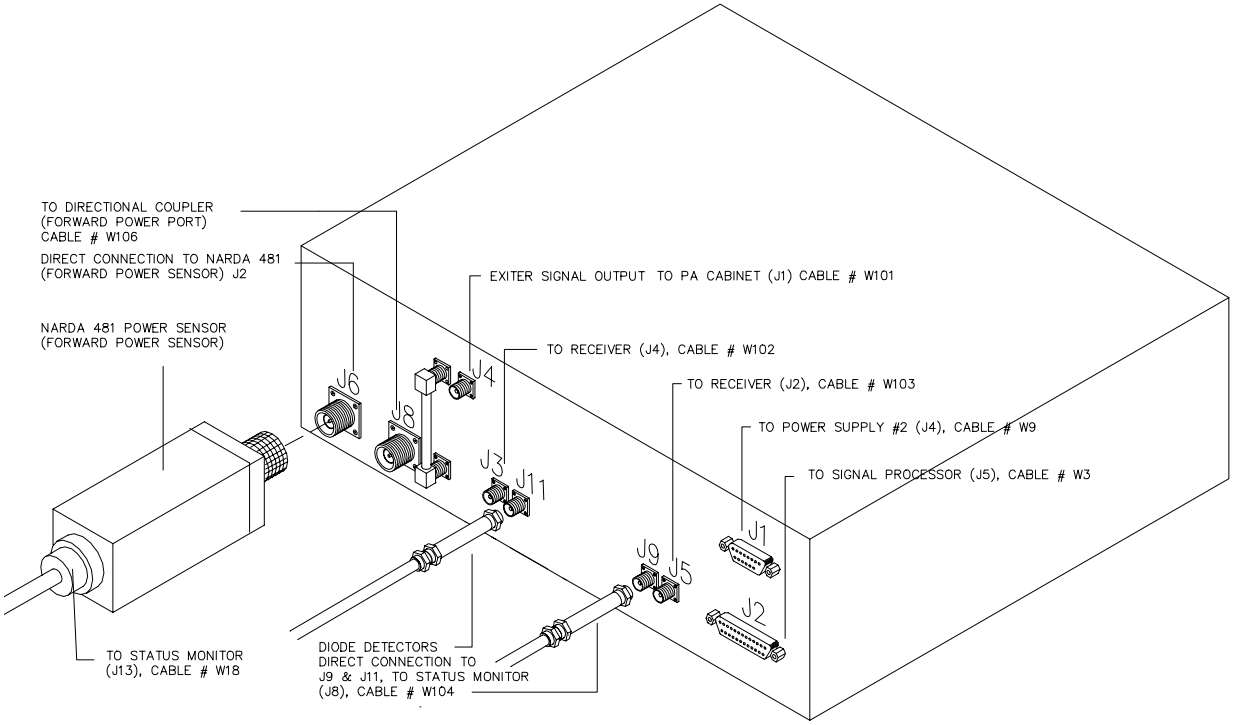

Figure 4-3 RF Generator Rear Panel

3. Remove the four mounting screws from the front panel of the RF generator (see Figure 4-1) and slowly pull the unit to its full-out position.

4. Remove plugs P1 and P2 from connectors J1 and J2 on the rear panel of the RF Generator by depressing the clips on either side of the plugs (see Figure 4-3).

5. Remove the Diode Detectors from J9 and J11; leave them attached to their cables. Note the designations of the cables for future reference.

6. Remove the cables from connectors J3, J4, and J5.

7. Unscrew the type "N" connectors from J6 and J8. Unplug cable #W106 from J8. Remove the forward power sensor from J6.

8. Disengage the slide rails and remove the old RF Generator from the rack with the rails still attached.

9. Remove the slide rails and attach them to the new RF Generator.

10. Install the new unit in the rack.

11. Attach the forward power sensor to J6 and tighten the type "N" connector.

12. Connect cable #W106 to J8 and tighten the type "N" connector.

13. Connect cable #W103 to port J5, cable #W102 to J3, and cable #W101 to J4 and tighten the connections, using a 5/16" wrench if necessary.

14. Reconnect plugs P1 and P2 to ports J1 and J2, and secure the mounting clips.

15. Re-calibrate the Diode Detectors using the diode detector calibration procedure described in Section 4.3.2.

16. Reconnect the Diode Detectors to ports J9 and J11.

17. Carefully slide the unit back into the rack and install the four mounting screws on the front panel.

18. Power up the profiler using the standard power-up sequence described in Section 2.4.

19. Contact the Profiler Control Center at (303) 497-6033 to verify that the RF Generator replacement has been successfully accomplished.

4.2 Forward Power Sensor

The Narda 481 Forward Power Sensor is attached to port J6 of the RF Generator (see Figure 4-3). The sensor monitors the forward power at port J8, which is directly connected to the forward power port of the Directional Coupler in the Beam Steering Unit Cabinet. The sensor converts RF energy to a proportional DC voltage that can be measured by the SSM A/D convertor.

4.2.1 Forward Power Sensor Replacement Procedure

1. Follow the standard power-down sequence described in Section 2.3.

2. Remove the air filter panel above the RF Generator from the front of the Equipment Cabinet.

3. Remove the four mounting screws from the front panel of the RF Generator and pull the unit to its full-out position.

*** WARNING ***	
Profiler communications equipment (the DSU) rest on top of the RF Generator behind the air filter panel. Remove the air filter panel above the RF Generator before attempting to pull the RF Generator out from the Equipment Cabinet as shown in photo to right.	

4. Disconnect the Forward Power Sensor by unscrewing and removing the type "N" connector from port J6 on the RF Generator back panel (see Figure 4-3).

5. Unscrew and remove the interface-cable connector from the end of the Forward Power Sensor. Use care to prevent Forward Power Sensor interface-cable #W18 from falling to the bottom of the rack since it will be difficult to retrieve in this position.

6. Connect the interface-cable connector to the end of the new sensor, and screw the sensor's type "N" connector into port J6 on the rear panel of the RF Generator.

4.2.2 Forward Power Sensor Calibration

When the Forward Power Sensor is replaced, a calibration must be performed. The calibration is accomplished by setting the zero-offset of the sensor and adjusting the output of the sensor using a peak power meter as the standard.

The steps required to calibrate the Forward Power Sensor include zero-offset adjustment, test equipment setup, power measurement, sensor output calculation, and sensor output calibration. The following test equipment is required:

- HP8491A 10 dB Attenuator
- HP84811A Power Sensor
- HP8900D Peak Power Meter
- Digital Volt Meter (DVM)
- 100 MHZ Oscilloscope
- 2 - BNC (M) to BNC (M) coaxial cables
- Small flat-blade screwdriver

Zero Offset Adjustment

1. Remove the side panel of BSU Cabinet and disconnect the 3-dB pad and coaxial cable from the forward power port on the Directional Coupler (point A in Figure 4-4).

2. Remove the four mounting screws from the front panel of the System Status Monitor and pull the unit to its full-out position. Remove the top cover panel of the SSM.

3. Connect the DVM between test points TP7(+) and TP14(GND) of the Analog Interface Board inside the SSM chassis (see Figure 4-7 for the component layout of the Analog Interface Board).

4. Turn on Breaker #22 to restore power to the Equipment Cabinet.

5. Adjust R23 on the SSM Analog Interface Board for 0 VDC (± 10mV).

6. Turn off Breaker #22 to remove power from the Equipment Cabinet.

Test Equipment Setup

1. Connect one end of the HP8491A 10-dB Attenuator to the HP84811A Power Sensor and the other end to the FWR (forward) power port of the Directional Coupler as illustrated in Figure 4-4.

2. Connect the output cable of the Power Sensor to the SENSOR input of the HP8900D Peak Power Meter (point B in Figure 4-4).

3. Determine the correction factor marked on the HP84811A Power Sensor that is nearest to the 400-MHz range and dial it into the CORRECTION switches on the front panel of the HP8900D Peak Power Meter (point C in Figure 4-4).

4. Set the READING OFFSET on the HP8900D Peak Power Meter to "60 dB", set the MODE to "COMPARE", and the RANGE to "10 mW". If an over range condition occurs during measurements, change the range to "100 mW".

5. Connect the Trigger Output of the HP8900D to the External Trigger Input of an oscilloscope using a BNC (M) to BNC (M) coaxial cable.

6. Connect the Video Output of the HP8900D to Channel One of the Oscilloscope using a BNC (M) to BNC (M) coaxial cable.

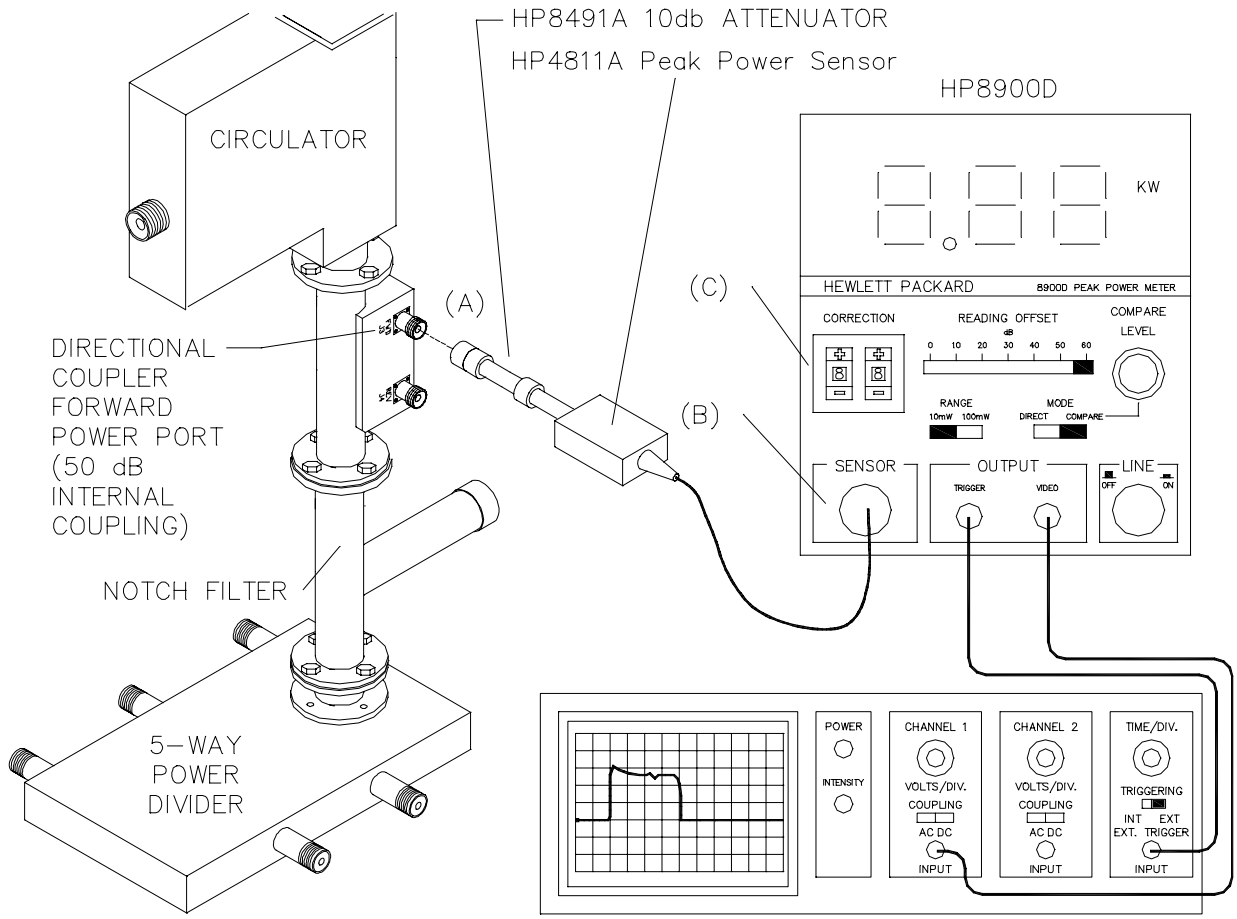

Figure 4-4 Forward Power Sensor Calibration Test Equipment Setup

7. Oscilloscope Settings:

Channel One Volts/Div:	5 mV/Div
Time/Div:	5 s/Div
Trigger:	External
Trigger Edge:	Rising Edge

8. Power up the system by following the standard power-up sequence in Section 2.4.

Power Measurement

The profiler spends two minutes in each of its three beams (east, north, and vertical): one minute in the high mode and then one minute in the low mode. All power

measurements and adjustments must be made in the same beam and mode to ensure the consistency of the measurements.

Observe the front panel of the Beam Steering Unit to determine when the profiler is in a particular beam and mode. When the radar switches beams, one minute remains to make measurements or adjustments in high mode before it switches to low mode using the procedures described below. If measurements or adjustments cannot be made in the selected one minute period, wait until the next time the radar switches into the desired beam and mode.

While the radar is in the beam and mode that has the highest measurable power, observe the waveforms on the oscilloscope. Adjust the *COMPARE LEVEL* knob on the HP8900D to position the *Compare Trace* at the top of the transmitted pulse waveform, averaging through any ripples. Figure 4-5 and Figure 4-6 are examples of transmitted pulses in the high and low modes respectively, the compare traces in these figures have been positioned correctly. Record the peak power value displayed on the HP8900D (referenced below as $P_{measured}$).

Figure 4-5 20 us Peak Power Pulse in High Mode

Waveform displayed on an oscilloscope when used in conjunction with an HP8900D peak power meter. The vertical position of the **Compare Trace** is varied by rotating the *Compare* knob on the HP8900D.

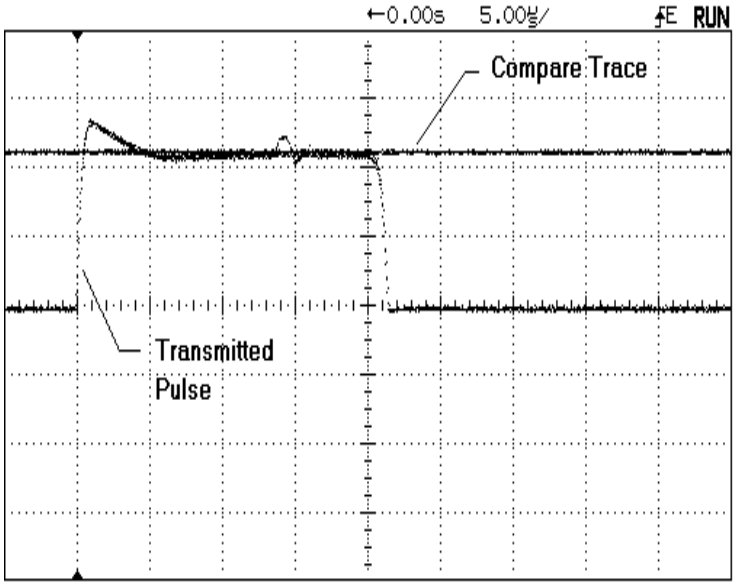

Forward Power Sensor Output Calculation

Calculate the Forward Power Sensor output voltage at a given power level using Equation (4-2) and record the result for later use in the calibration of the sensor.

$$V_{out} = P_{meaured} / 4 \qquad (4\text{-}1)$$

Figure 4-6 3.33 us Peak Power Pulse in Low Mode

Waveform displayed on an oscilloscope when used in conjunction with an HP8900D peak power meter. The vertical position of the **Compare Trace** is varied by rotating the *Compare* knob on the HP8900D.

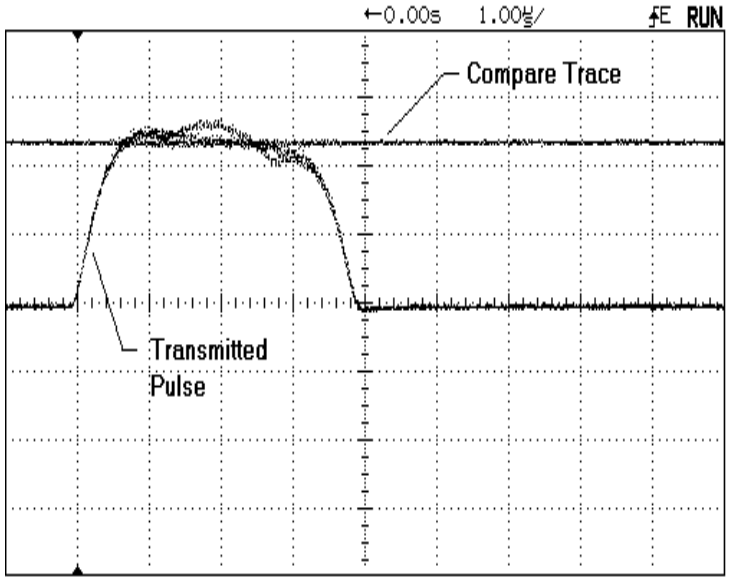

where: V_{out} = Forward Power Sensor output voltage measured at TP7(+) of the SSM Analog Interface Board.

$P_{measured}$ = Meter reading of the HP8900D Peak Power Meter

Example: Calculate V_{out} when $P_{meaured}$ = 5.90 KW.

5.90 KW / 4 = 1.475 VDC

Forward Power Sensor Calibration

1. Disconnect the HP84811A Peak Power Sensor and 10 dB Attenuator from the Forward Power port of the Directional Coupler and reconnect the 3-dB pad and coaxial cable #W106.

2. Connect the DVM between TP7(+) and TP14(GND) on the SSM Analog Interface Board located in the chassis of the unit (see Figure 4-7).

3. With the profiler in operational mode and transmitting in the same beam direction and mode that was used to measure the forward power, adjust the calibration potentiometer on the Forward Power Sensor to produce a DC voltage corresponding to the result obtained using Equation (4-1).

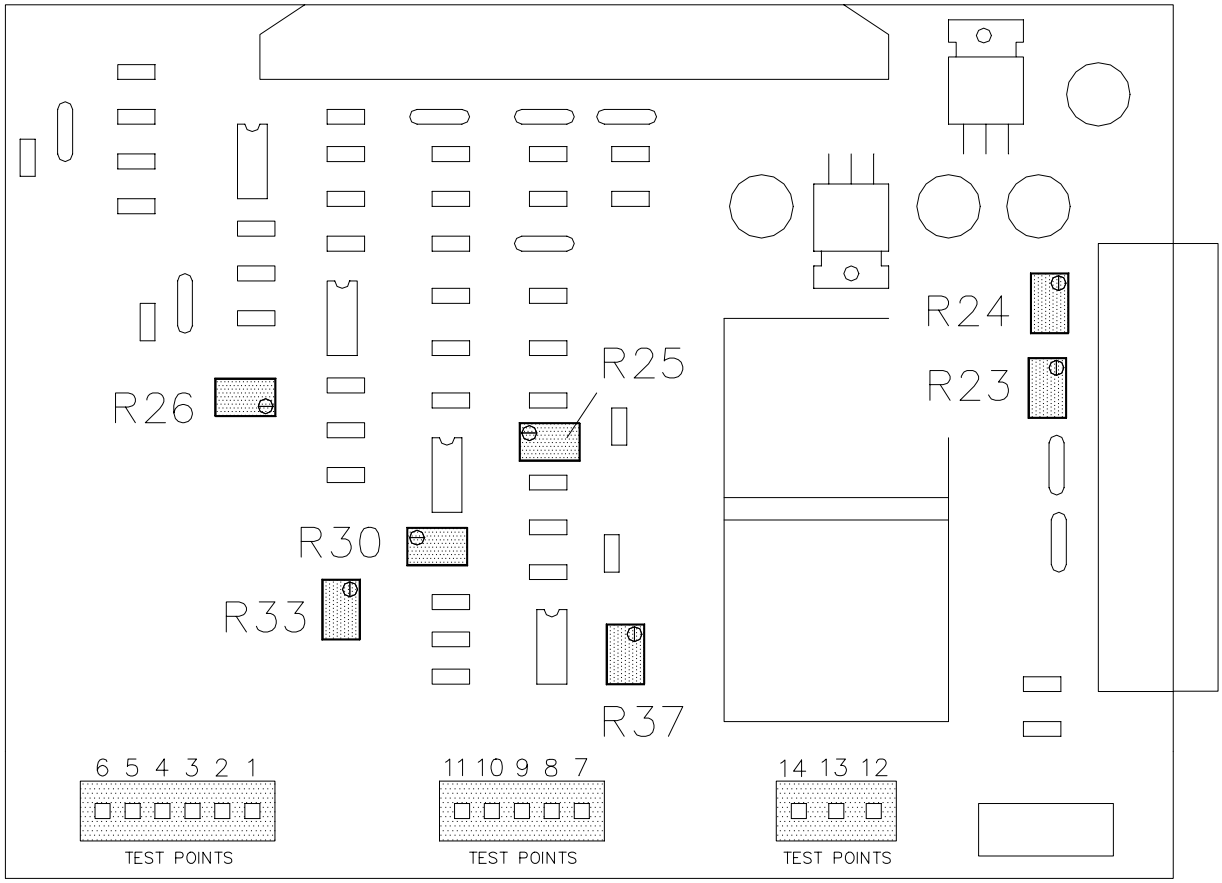

Figure 4-7 Status Monitor Analog Interface Board Component Layout

4. The Forward Power Sensor calibration potentiometer is exposed by removing the metallic plug from the side of the sensor housing (see Figure 4-8). Use a small flat-blade screwdriver to make the adjustment and calibrate the sensor.

Completion Activities

1. Replace the plug on the side of the Forward Power Sensor.

2. Push the RF Generator back into the Equipment Cabinet and replace the four mounting screws on the front panel.

3. Replace the air filter panel above the RF Generator.

4. Replace the top cover of the SSM.

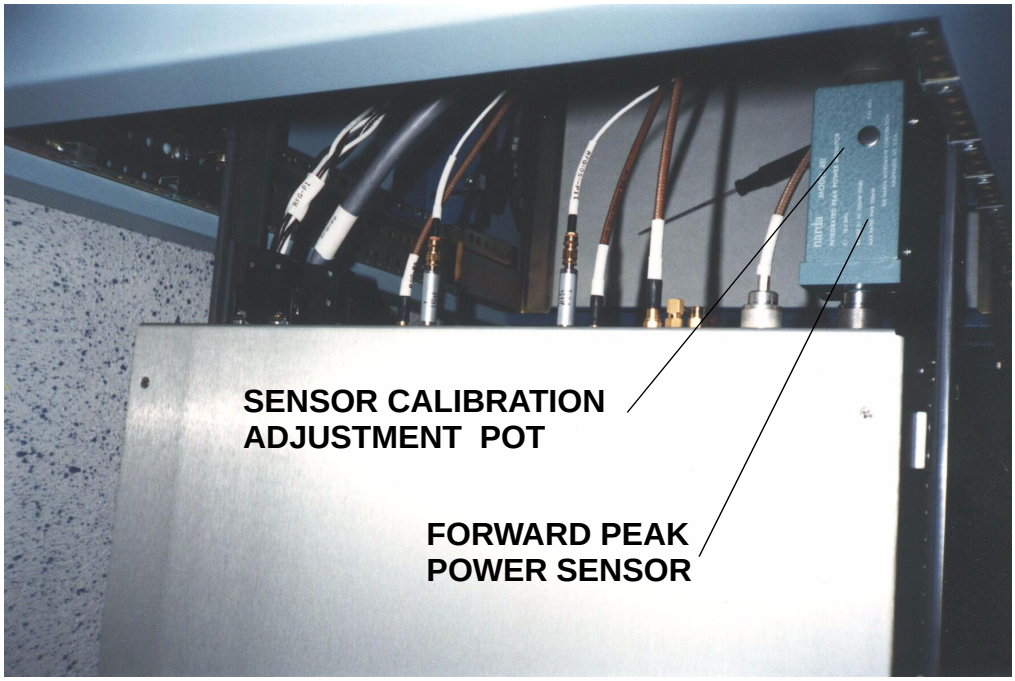

Figure 4-8 Forward Power Sensor Adjustment Potentiometer

5. Push the SSM back into the Equipment Cabinet and replace the mounting screws on the front panel.

6. Contact the Profiler Control Center to verify that the Forward Power Sensor calibration and replacement has been successfully accomplished.

4.3 Diode Detectors

The Diode Detectors, connected to ports J9 and J11 of the RF Generator (see Figure 4-9 and Figure 4-10), rectify LO and COHO RF signals from the RF Generator to produce a proportional DC voltage that is monitored by the SSM to detect RF Generator faults.

4.3.1 Diode Detector Replacement Procedure

1. Follow the standard power-down sequence in Section 2.3.

2. Remove the four mounting screws from the front panel of RF Generator and carefully pull the unit to its full-out position as shown in Figure 4-10.

3. Remove the Diode Detectors from ports J9 and J11 on the rear panel of the RF Generator and note the cable designations for future reference.

4. Remove the Diode Detectors from cables #W104.

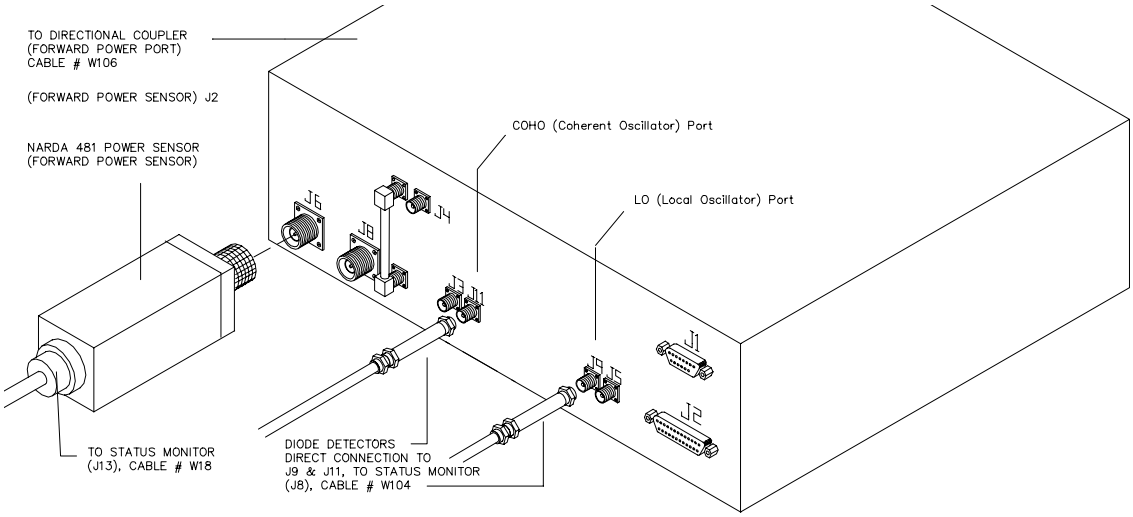

Figure 4-9 Diode Detector Replacement

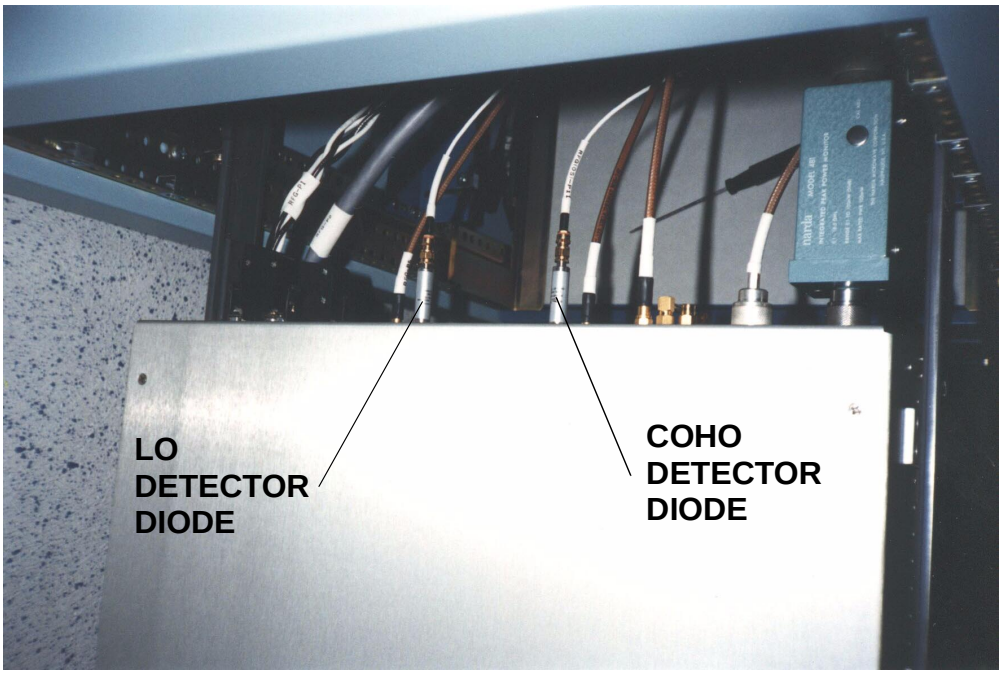

Figure 4-10 RF Generator Detector Diodes

5. Connect the replacement Diode Detectors to cables #W104. Do not reconnect the Diode Detectors to ports J9 and J11 until the "offset" calibration procedures have been completed.

***** CAUTION *****

While the Diode Detectors are disconnected from the RF Generator, make sure the metallic housing of the detectors does not come in contact with any other metallic components such as the rack frame or LRU covers. Isolating the detector housing will prevent erroneous meter readings from occurring during the "offset" calibrations.

4.3.2 Diode Detector Calibration

A Digital Volt Meter (DVM) is required to perform the Diode Detector calibration.

Coherent and Local Oscillator Trip Level Adjustment

1. Remove the four mounting screws from the front panel of the System Status Monitor and carefully slide the SSM to its full-out position. To prevent the cables on the rear panel of the SSM from binding, it may be necessary to slide-out power supply #2 (below the SSM).

2. Remove the top cover panel of the SSM.

3. Turn on Circuit Breaker #22 to return power to the Equipment Cabinet.

4. Connect the ground lead of the DVM to test point TP14(GND) on the SSM Analog Interface Board, and the positive lead to TP10(+). See Figure 4-7 for the location of these test points.

5. Adjust R30 (COHO offset) to produce 0 VDC ± 0.05 VDC.

6. Connect the Diode Detector and cable labeled RFG-P11 to port J11 on the RF Generator.

7. Adjust R26 (COHO gain) to produce 3.75 VDC ± 0.50 VDC.

8. Move the positive lead of the DVM from TP10(+) to TP11(+).

9. Adjust R37 (LO offset) to produce 0 VDC ± 0.05 VDC.

10. Connect the Diode Detector and cable labeled RFG-P9 to port J9 of the RF Generator.

11. Adjust R33 (LO gain) to produce 3.75 VDC ±0.50 VDC.

12. Replace the top cover panel of the SSM, push the unit back into the Equipment Cabinet, and replace the four mounting screws on front panel.

13. Push RF Generator back into the Equipment Cabinet and replace the four mounting screws on the front panel.

14. Turn off Breaker #22 and follow the standard power-up sequence in Section 2.4.

4.4 Data Processor

The Data Processor (DP) Assembly, located above the Signal Processor in the Equipment Cabinet (see Figure 4-11), is built around a Digital Equipment Corporation MicroVax II computer with one megabyte of random access memory (RAM). The Data Processor Assembly also contains the following components:

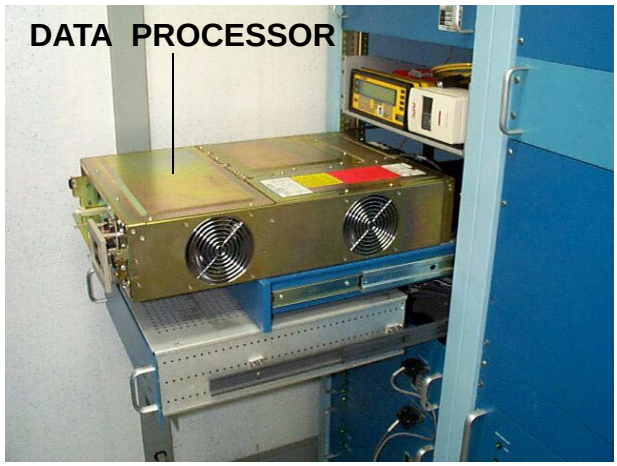

Figure 4-11 Data Processor Location

- An Erasable Programmable Read Only Memory (EPROM) card that contains all programs and system constants (that are transferred to RAM when the system is powered up or rebooted).

- A SKY-320 Digital Signal Processor (hardware Fast Fourier Transform (FFT) card) that performs spectral computations on pulse-compressed time-domain data provided by the Signal Processor.

- An 8-line RS-232 Interface card that provides communication interfaces with various system components including; GOES Communications, DSU Communications, System Status Monitor, Profiler Maintenance Terminal (PMT), and peripheral systems such as the Profiler Surface Observing System (PSOS) and the Radio Acoustic Sounding System (RASS) temperature profiler.

4.4.1 Data Processor Firmware Versions

The functionality of the profiler radar continues to evolve adding new capabilities to the basic system configuration. To accommodate new enhancements, upgrades must be made to the DP firmware. The DP firmware is a set of EPROM chips located on the EPROM board inside the Data Processor (see Figure 4-15 for location). There are two different versions of Data Processor firmware currently in use. Appendix E provides the current distribution of firmware versions at all network profiler sites. The basic differences between the firmware versions are described below in Table 4-1.

***** IMPORTANT *****

When a DP is ordered out of spares stock from Kansas City, the DP is shipped with **Version 8.2** firmware. If a DP is replaced at a site that is equipped with RASS, the EPROM cards in the *original and replacement DP must be interchanged* to ensure that Version 9 firmware stays with the site. Figure 4-12 and Figure 4-13 show the PC board layout, jumper settings, and chip configurations for version 8.2 and 9 EPROM cards.

Table 4-1 Data Processor Firmware Versions

Firmware Version	Status	Notes about Firmware Version
Version 3	Obsolete 404 MHz	Previous base-line configuration firmware. **Not Y2K Compliant.**
Version 4	Obsolete 404 MHz	Adds sea-clutter removal capabilities to the signal processing. **Not Y2K Compliant.**
Version 6	Obsolete 404 MHz	Adds RASS capabilities to the profiler configuration. **Not Y2K Compliant.**
Version 8.2	Active 404 MHz	Current Baseline Firmware Version for 404 MHz Profiler Systems without RASS Option
Version 9	Active 404 MHz With RASS	Current Baseline Firmware Version for 404 MHz Profiler Systems with RASS Option
Version 10	Prototype 449 MHz	Prototype Baseline Firmware Version for 449 MHz Profiler Systems without RASS Option
Version 11	Prototype 449 MHz With RASS	Prototype Baseline Firmware Version for 448 MHz Profiler Systems with RASS Option

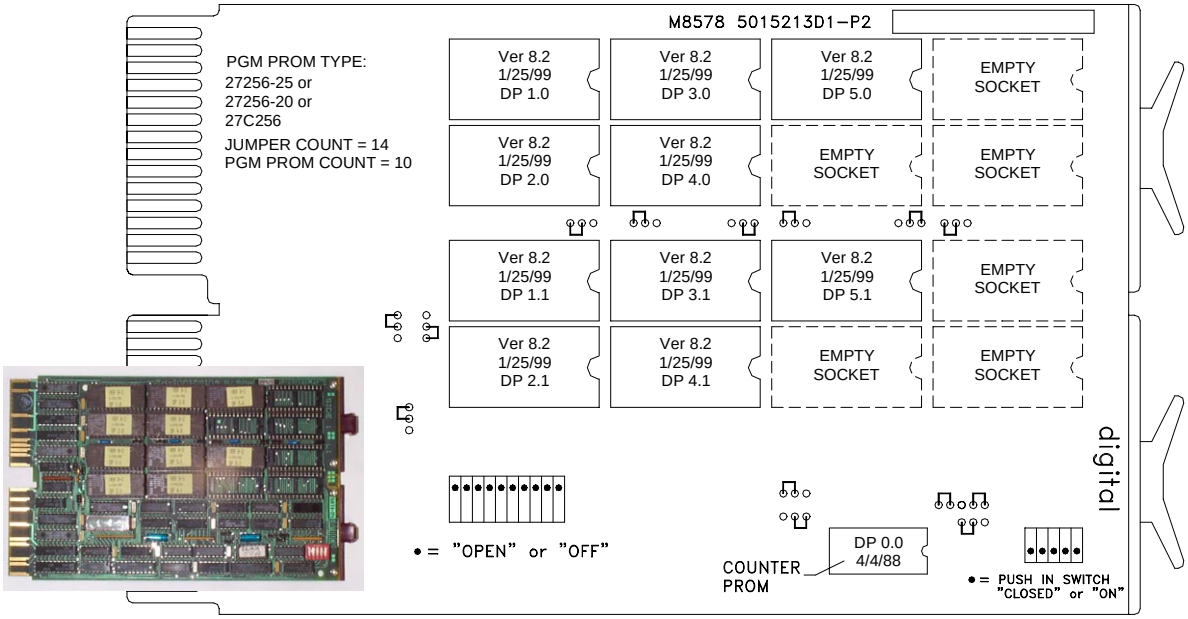

Figure 4-12 Version 8.2 Data Processor EPROM Board Configuration

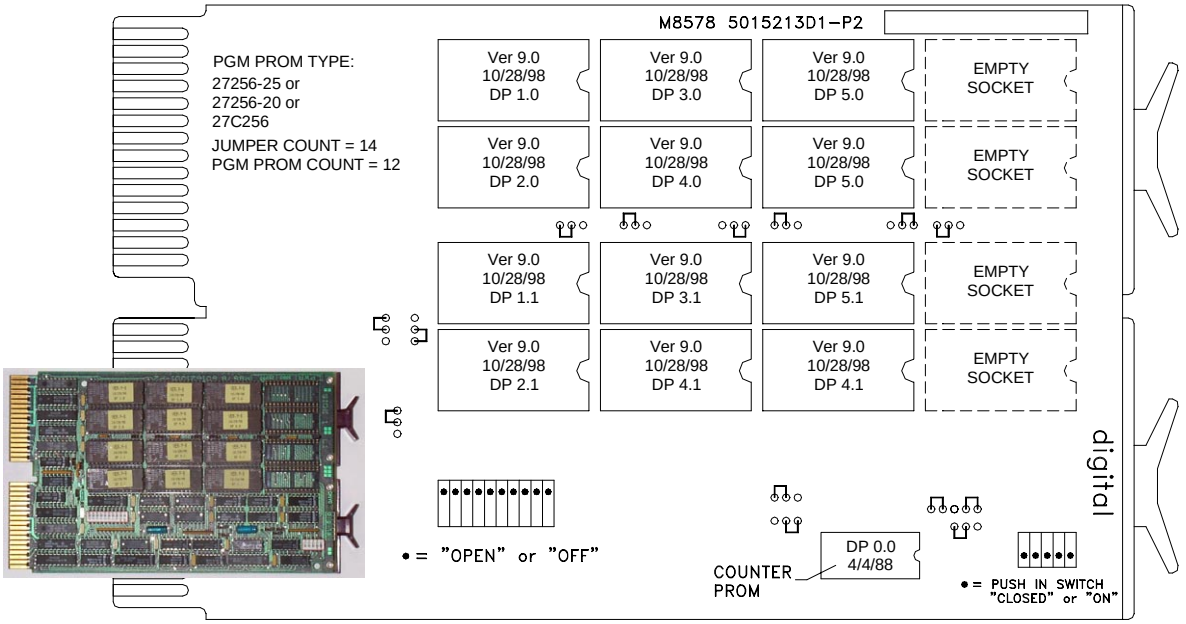

Figure 4-13 Version 9.0 Data Processor EPROM Board Configuration

4.4.2 Data Processor Replacement

Data Processor Removal Procedure

***** NOTE *****

When the Data Processor is pulled to its full-out position, its only means of support is the pull-out shelf directly below it. Be sure to pull out the shelf before extracting the Data Processor.

Because of the physical configuration of the interface cables between the Data Processor and the Signal Processor, the two units must be pulled out of the Equipment Cabinet in concert as shown in Figure 4-11.

1. Follow the standard power-down sequence in Section 2.3.

2. Remove the four mounting screws from the front panel of the Signal Processor.

3. Remove the front cover of the Data Processor and remove the mounting screws from the unit.

4. Pull the shelf from beneath the Data Processor to its full-out position while concurrently pulling the Signal Processor and Data Processor to their full-out positions. Note that the Data Processor should be resting on the shelf below.

5. Disconnect ribbon cables P1 and P2 from ports J1 and J2 on the rear panel of the Signal Processor. Reach behind the Data Processor and pull the ribbon cables out, draping them over the top of the Data Processor.

6. Verify that each RS-232 cable designation is clearly marked as referenced in Figure 4-14. If a designation is absent, note the point of connection between the cable and the Data Processor.

7. Using a small flat-blade screwdriver, loosening the retaining screws on both sides of connectors B1, B3, B4, C1, and C2.

8. Unplug the AC power cord from the rear of the Data Processor.

9. Remove the old Data Processor from the shelf.

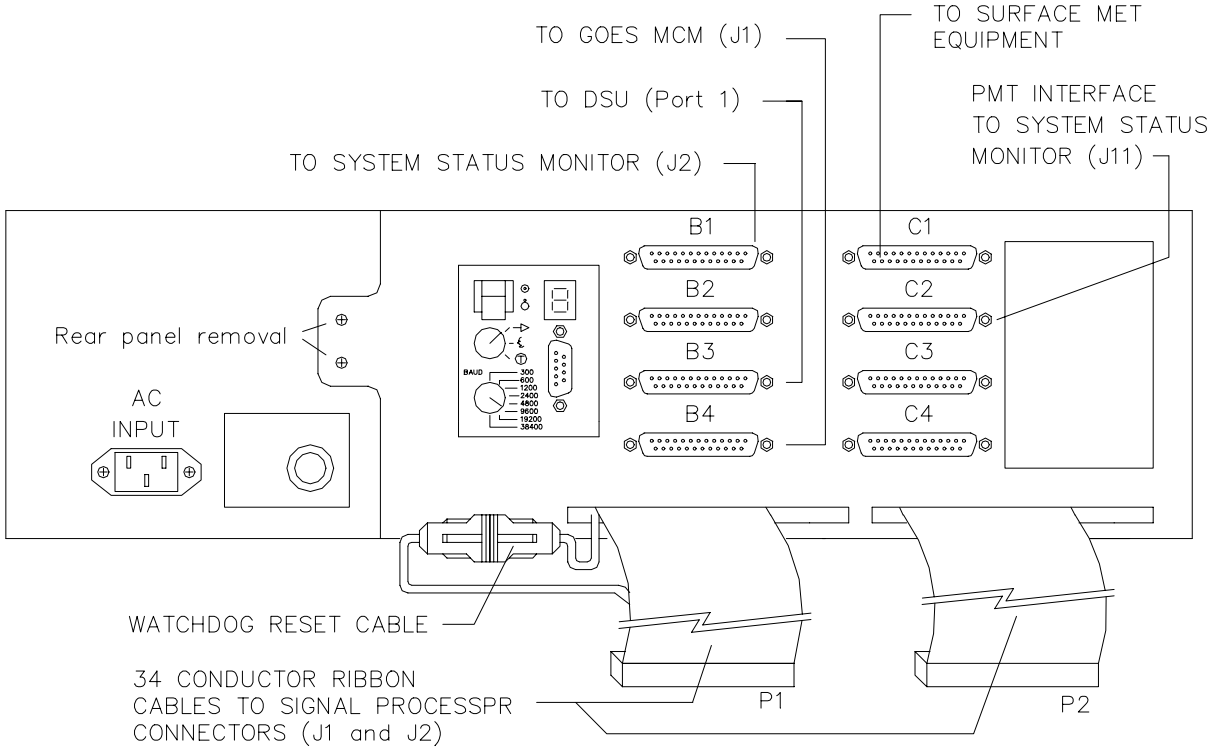

Figure 4-14 Data Processor Rear Panel and Cable Connections

Data Processor Installation Procedure

***** NOTE *****

The circuit cards housed in the Data Processor card cage can become dislodged or improperly seated during shipping. Prior to installing a new Data Processor, it is necessary to remove the rear panel from the Data Processor and re-seat all cards in the card cage.

1. Place the new Data Processor on the Equipment Cabinet shelf with the rear panel facing you.

2. Remove the two screws labeled "Rear Panel Removal" (as shown in Figure 4-14) and remove the back panel of the Data Processor by swinging the panel outward to disengage the hinge on the right side. Lay the rear panel flat to expose the

card cage containing the Data Processor circuit cards. Refer to Figure 4-15 for layout of the card cage.

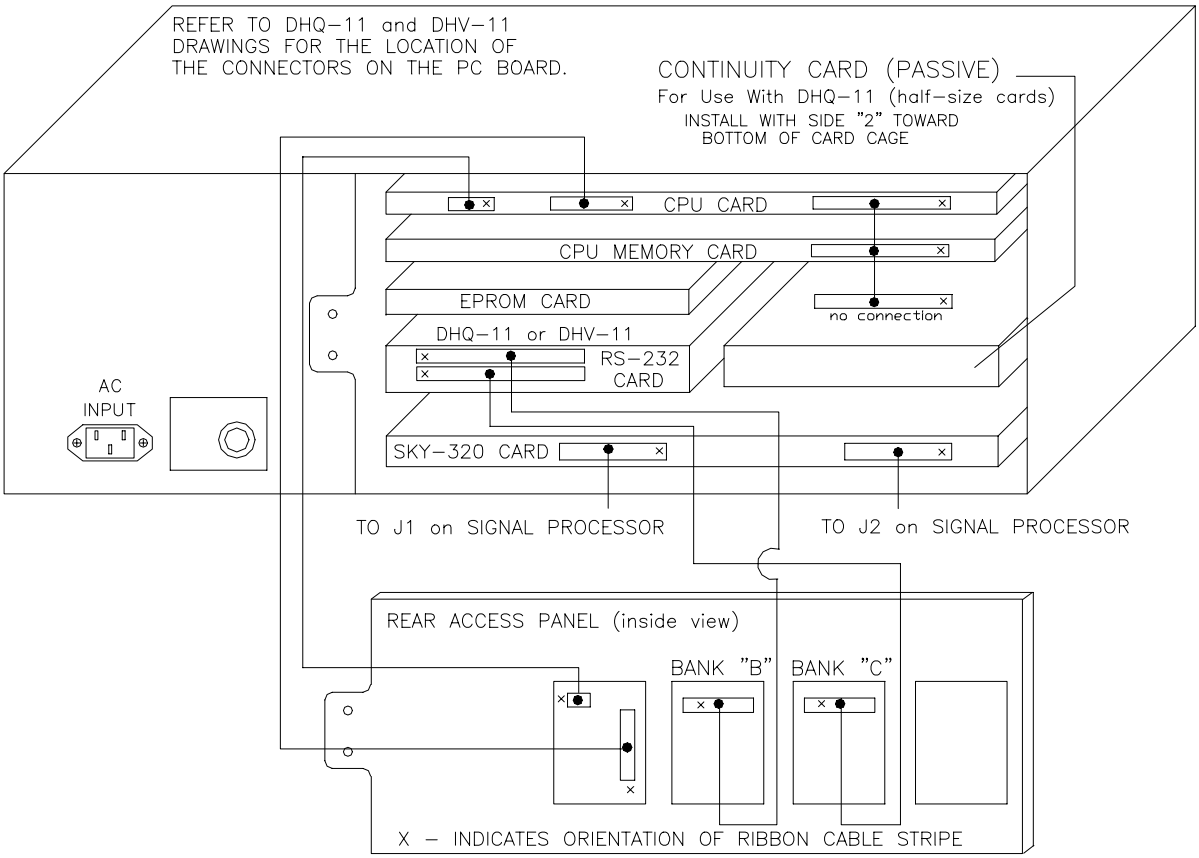

Figure 4-15 Data Processor Card Cage Layout

***** CAUTION *****

The circuit cards in the DP can be damaged by STATIC ELECTRICITY! Always exercise anti-static precautions and, if possible, use an anti-static mat and wrist strap when handling these cards.

3. If the site firmware is version 9 (RASS), remove the EPROM card from the old unit and install the card in the replacement DP. When seating the EPROM card, make sure it remains firmly against the left guide of the card cage

4. Partially remove the full-size cards by disengaging the locking mechanisms on the ends of the cards and re-seat them firmly. Partially remove half-size cards (without locking mechanisms), and re-seat them to ensure that the left side of each card is firmly against the guides on the left side of the card cage (as shown in Figure 4-15).

5. Inspect all ribbon cable connectors to ensure that they are properly seated.

6. Replace the Data Processor rear panel and tighten the retaining screws.

7. Verify that the switch settings on the rear panel match those in Figure 4-16.

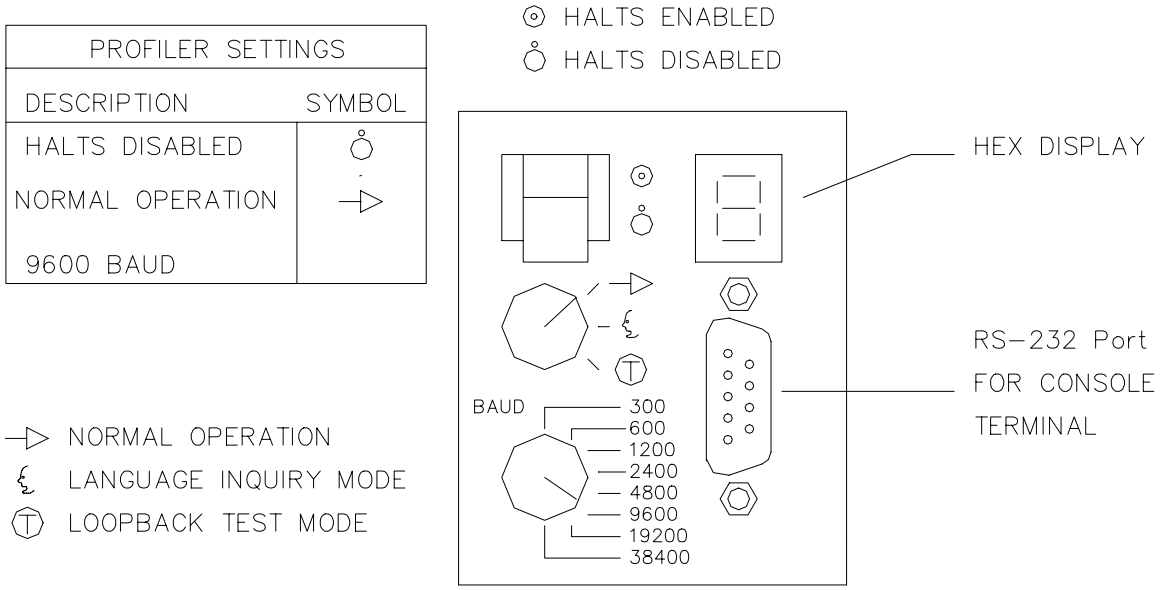

Figure 4-16 Data Processor Rear Panel Switch Settings

8. Turn the Data Processor so that the rear of the unit faces the Equipment Cabinet. Feed ribbon cables P1 and P2 down to the rear of the Signal Processor and reconnect them to ports J1 and J2.

9. Reconnect cables B1, B3, B4, C1, and C2 to their respective connectors (see Figure 4-14) and ensure that the retaining screws on both sides of the connectors are tightened properly.

10. Plug the AC power cord in to the rear panel of the Data Processor.

11. Turn on Breaker #24 and observe the hexadecimal display on the rear panel of the Data Processor (see Figure 4-16). A countdown sequence (starting on

hexadecimal digit F and ending on 0) should appear as the Data Processor boots up.

A display of 0 indicates that the Data Processor has booted successfully. If the countdown terminates before reaching zero, refer to Table 4-2 for the diagnostic message corresponding to the hexadecimal termination value. Try rebooting the Data Processor or contact the Profiler Control Center for assistance.

12. Turn off Breaker #24 to remove power from the Equipment Cabinet.

13. Slide the Data Processor and Signal Processor into position within the Equipment Cabinet and secure them with their mounting screws.

14. Replace the front cover of the Data Processor.

15. Follow the standard power-up sequence in Section 2.4.

16. Contact the Profiler Control Center at (303) 497-6033 to verify that the Data Processor replacement has been successfully accomplished.

Table 4-2 Data Processor Hexadecimal Diagnostic Display

Code	Description	Code	Description
F	Waiting for DC	**7**	Running data tests on RAM
E	Waiting for Processor	**6**	Running address test on RAM
D	Running checksum test on CPU ROM	**5**	Running tests that use Q22 bus to access local memory
C	Searching for RAM memory	**4**	CPU instruction and register tests
B	Read KA630-Z IPCR register	**3**	Running interrupt tests
A	Testing video console (if present)	**2**	Searching for bootstrap device
9	Identifying console terminal	**1**	Bootstrap device found
8	Language inquiry of CPU halted	**0**	Testing completed

4.4.3 8-Line RS-232 Interface Card Replacement

This component has been identified as a high failure item within the Data Processor Assembly Line Replaceable Unit (LRU). Under certain circumstances, it is desirable to replace this component without replacing the entire LRU.

There are two versions of the interface card that are functionally identical but physically dissimilar. These are designated Models DHV-11 and DHQ-11, the older and newer version, respectively. Refer to Figure 4-17 and Figure 4-18 for the layout and DIP switch settings for these cards. The DHV-11 is a full-width card, and the DHQ-11 is half-width card. The DHQ-11 card requires the installation of a passive Continuity card to operate. Refer to Figure 4-15 for the installed location of the Continuity card. The Continuity card has no active circuitry, but provides circuit traces which route necessary bus signals on back-plane of the card cage.

8-Line RS-232 Interface Card Removal Procedure

1. Remove the 8-Line RS-232 Interface Card by following steps 1-9 in the Data Processor Removal Procedure and steps 1-2 in the Data Processor Installation Procedure.

> ***** CAUTION *****
>
> When removing or installing model DHQ-11 RS-232 cards, take care not to let the interface cables (ribbon cables) insulation get scratched by the soldered component legs on the bottom of circuit board above the DHQ-11 in the card cage.

2. Locate and remove the RS-232 Interface Card from the card cage (see Figure 4-15).

3. Disconnect the ribbon cables from the interface card.

8-Line RS-232 Interface Card Installation Procedure

1. Configure the DIP switches on the new card as indicated in Figure 4-17 or Figure 4-18, as appropriate.

2. Reconnect the ribbon cables to the new interface card taking care to re-install the cables in their proper locations on the card. Refer to Figure 4-15 to identify Bank "B" and "C" cables.

3. Reinstall the RS-232 Interface Card in the card cage ensuring that the left side of the card is firmly seated against the guides on the left side of the card cage.

4. Reinstall the rear panel in the Data Processor by engaging the hinge on the right side of the panel and rotating it inward. Replace the screws at the point marked "Rear Panel Removal" (see Figure 4-14).

5. Follow steps 7-14 in the Data Processor Installation Procedure.

6. Contact the Profiler Control Center at (303) 497-6033 to verify that the 8-Line RS-232 Interface Card replacement has been successfully accomplished.

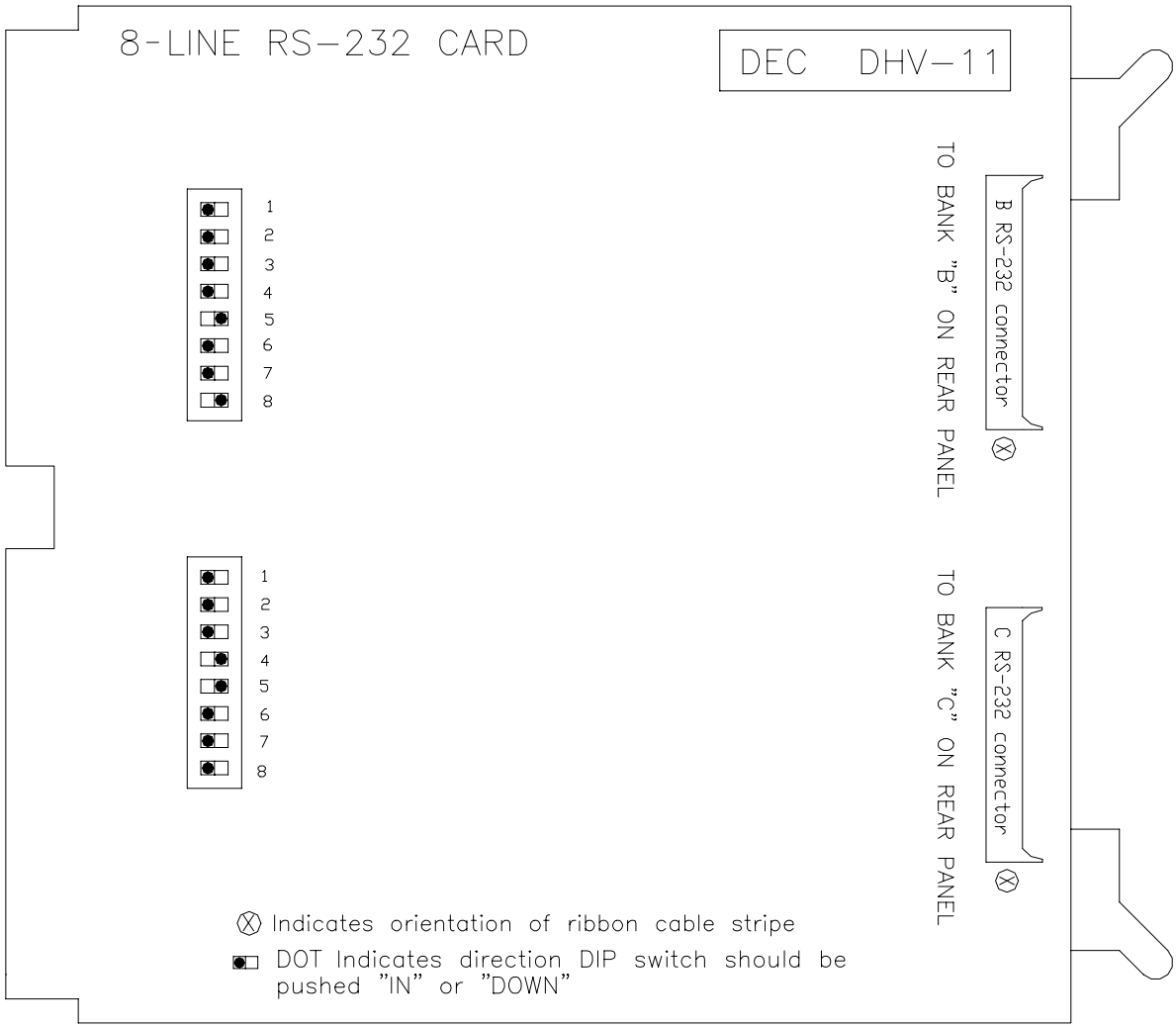

Figure 4-17 Model DHV-11 8-Port RS-232 Interface Card

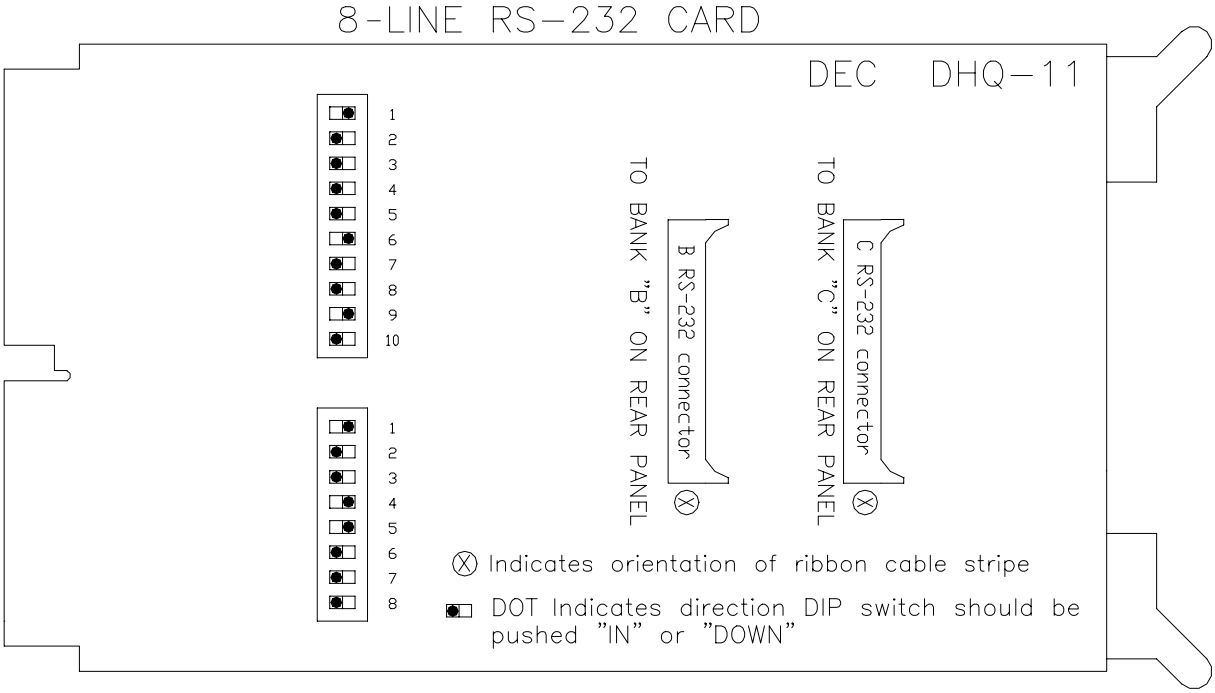

Figure 4-18 Model DHQ-11 8-Port RS-232 Interface Card

4.4.4 Erasable Programmable Read-Only Memory Card Replacement

Occasional upgrades to the software in the EPROM will require replacement of the EPROM card. The following procedures describe replacement of this card.

EPROM Card Removal Procedure

1. To replace the EPROM Card, follow steps 1-9 in the Data Processor Removal Procedure, and steps 1-2 in the Data Processor Installation Procedure. EPROM Card.

2. Locate and remove the EPROM Card from the card cage (see Figure 4-15).

EPROM Card Installation Procedure

1. Install the new EPROM Card in the card cage ensuring that the left side of the card is firmly seated against the guides on the left side of the card cage.

2. Reinstall the rear panel in the Data Processor by engaging the hinge on the right side of the panel and rotating it inward. Replace the screws at the point marked "Rear Panel Removal" (see Figure 4-14).

3. Follow steps 7-14 in the Data Processor Installation Procedure.

4. Contact the Profiler Control Center to verify that the EPROM Card replacement has been successfully accomplished.

4.5 Signal Processor

The Signal Processor is located between the Data Processor and the System Status Monitor in the Equipment Cabinet (see Figure 4-19). It performs high speed data processing of the signals generated by the Receiver, and transmits master timing and control signals to various profiler subsystems.

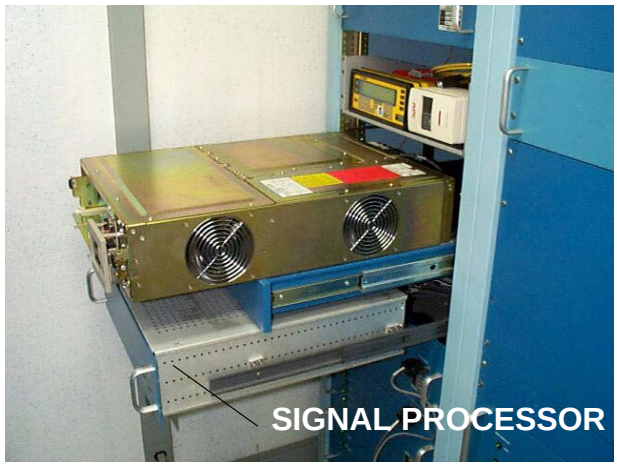

Figure 4-19 Signal Processor Location

An important element of the Signal Processor is the "Watchdog Timer" reset circuit. The Watchdog Timer reboots the Data Processor when any one of the following conditions occur:

- Data Processor "hangs up" due to a fatal error in the software.
- Voltage Standing Wave Ratio (VSWR) fault is detected by the SSM.
- Beam Steering Unit (BSU) fault is detected by the SSM.

If any error occurs four consecutive times, the Watchdog Timer will not attempt to reboot the Data Processor. Under these circumstances, the Data Processor must be rebooted manually using the Profiler Maintenance Terminal (PMT) or, if "hard hung", by power cycling the system.

The Signal Processors internal circuit board is mounted on hinged strand-offs (see Figure 4-20). During shipping, these stand-offs supporting the circuit board can become loose or even dislodged, creating the potential for the circuit board to short-out on the

chassis. As a general rule, always perform a visual inspection of the replacement Signal Processor's internal components prior to installation. Verify the circuit board is mounted securely and that all connectors are seated properly.

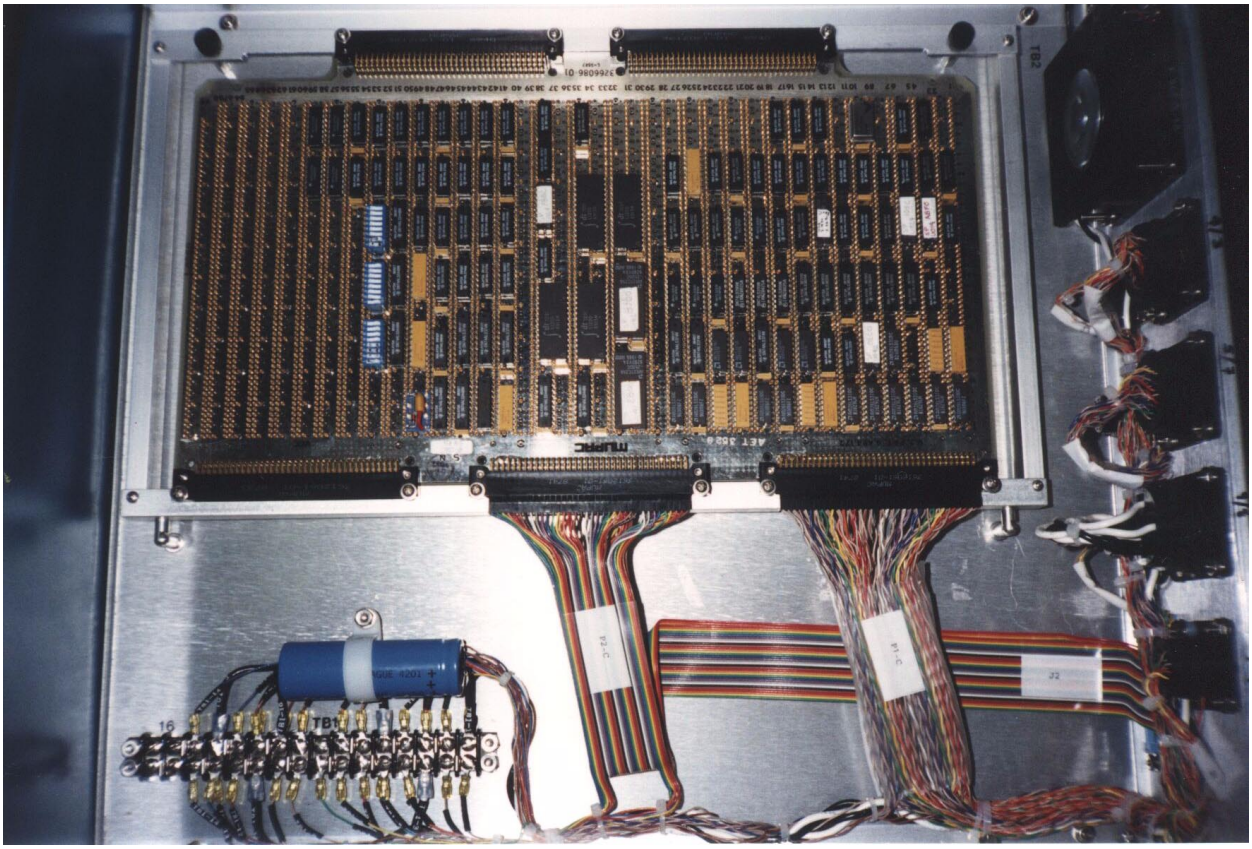

Figure 4-20 Signal Processor Internal Component Layout

Signal Processor Replacement

1. Follow the standard power-down sequence in Section 2.3.

2. Remove the four mounting screws from the front panel of the Signal Processor and carefully pull the unit to its full-out position. Because of the arrangement of cables connecting the Signal Processor and Data Processor, it may be necessary to pull out the Data Processor and the shelf above it to gain sufficient access to the rear of the unit.

3. Unplug ribbon cables P1 and P2 from ports J1 and J2. Loosen the retaining nuts on plugs P3-P9, and disconnect them from ports J3-J9 on the rear panel of the Signal Processor (see Figure 4-21).

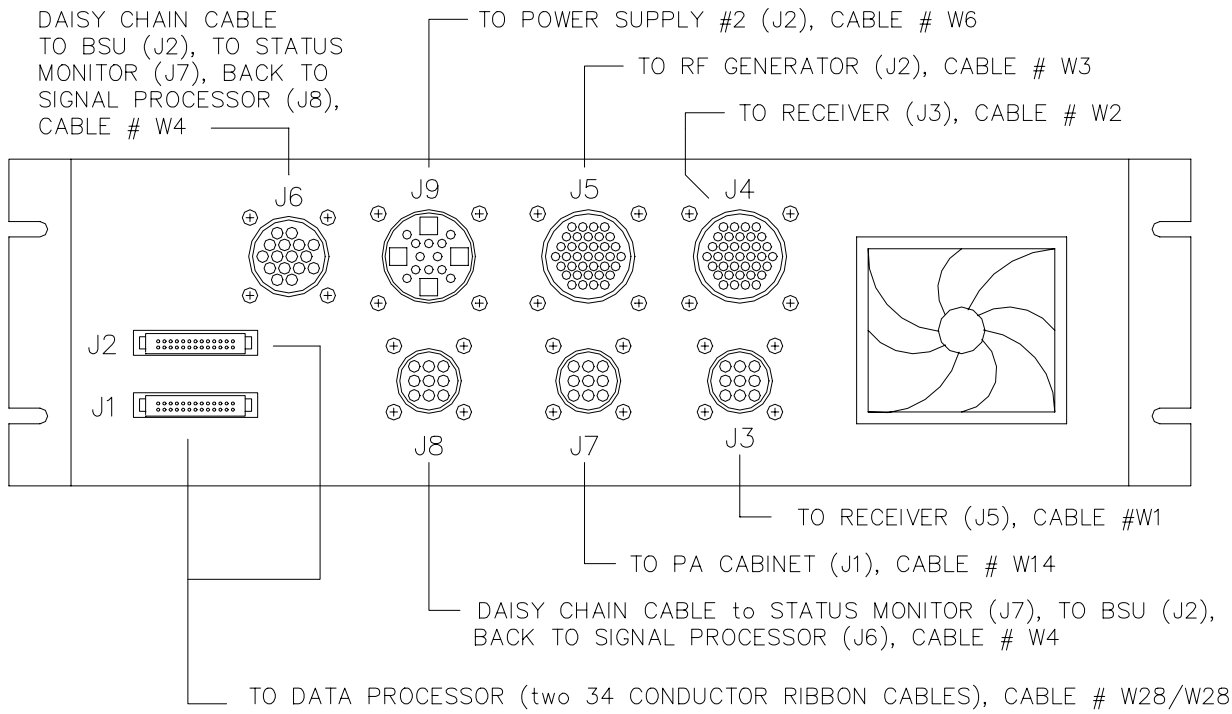

Figure 4-21 Signal Processor Rear Panel and Cable Connections

4. Disengage the slide rails from the unit and remove the Signal Processor from the Equipment Cabinet. Remove the slide rails from the old Signal Processor and transfer them to the new unit.

5. Insert the new Signal Processor into the Equipment Cabinet and engage the slide rails into their tracks.

6. Reach behind the Signal Processor, retrieve ribbon cables P1 and P2, plug them into ports J1 and J2, reconnect cables P3-P9 to J3-J9. Tighten the retaining nuts.

7. Slide the Signal Processor back into the Equipment Cabinet and replace the four mounting screws on the front panel. Return the Data Processor and shelf to their original positions.

8. Follow the standard power-up sequence in Section 2.4.

9. Contact the Profiler Control Center to verify that the Signal Processor replacement has been successfully accomplished.

4.6 System Status Monitor

The System Status Monitor (SSM) is located in the Equipment Cabinet between the Signal Processor and Power Supply #2 (see Figure 4-22). It is responsible for monitoring the environment of the Shelter Assembly and the status of critical profiler Line Replaceable Units. The SSM is comprised of an Intel Single Board Computer (SBC) with an Analog Multiplexer daughter board, two integrated temperature meters, a digital interface board, and an analog interface board. The internal component layout of the SSM is shown in Figure 4-23, and an interface diagram of the SSM is presented in Figure 4-24.

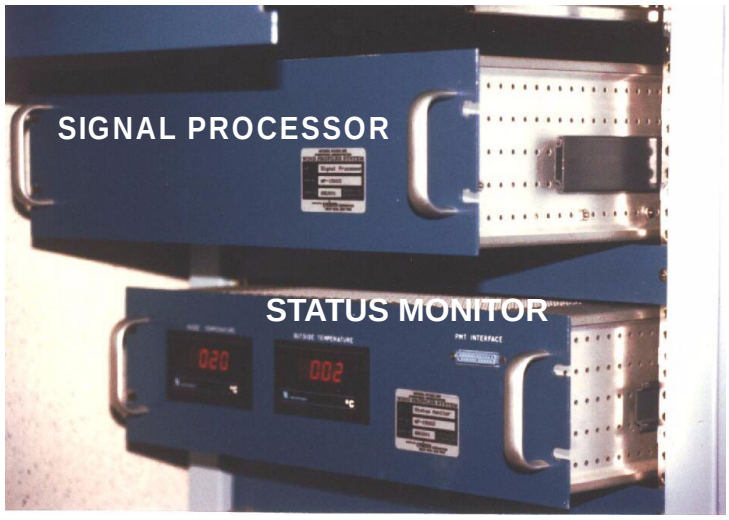

Figure 4-22 Status Monitor Location

4.6.1 Intel Single Board Computer (SBC)

The SSM is build around the Intel model iSBC 186/03A Single Board Computer. The Intel SBC operates under a stand-alone program that regulates the shelter environment independently from Data Processor control. The SBC measures analog voltages and processes digital I/O routed through the Analog and Digital Interface cards. The Intel SBC communicates processed status information to the Data Processor via RS-232 interface.

The Intel SBC contains two EEPROM chips (type 2864) that store critical site-specific parameters, a log of LRU failure information, and the Search and Rescue Satellite (SARSAT) turn-off schedules. Figure 4-25 shows that component layout of the Intel SBC and locations of the two EEPROMs (U43 and U76).

The System Status Monitor's internal components can become dislodged during shipping. Prior to installing a replacement unit, always remove the top cover panel and perform a visual inspection for mechanical integrity and verify that all internal cable connectors are seated properly.

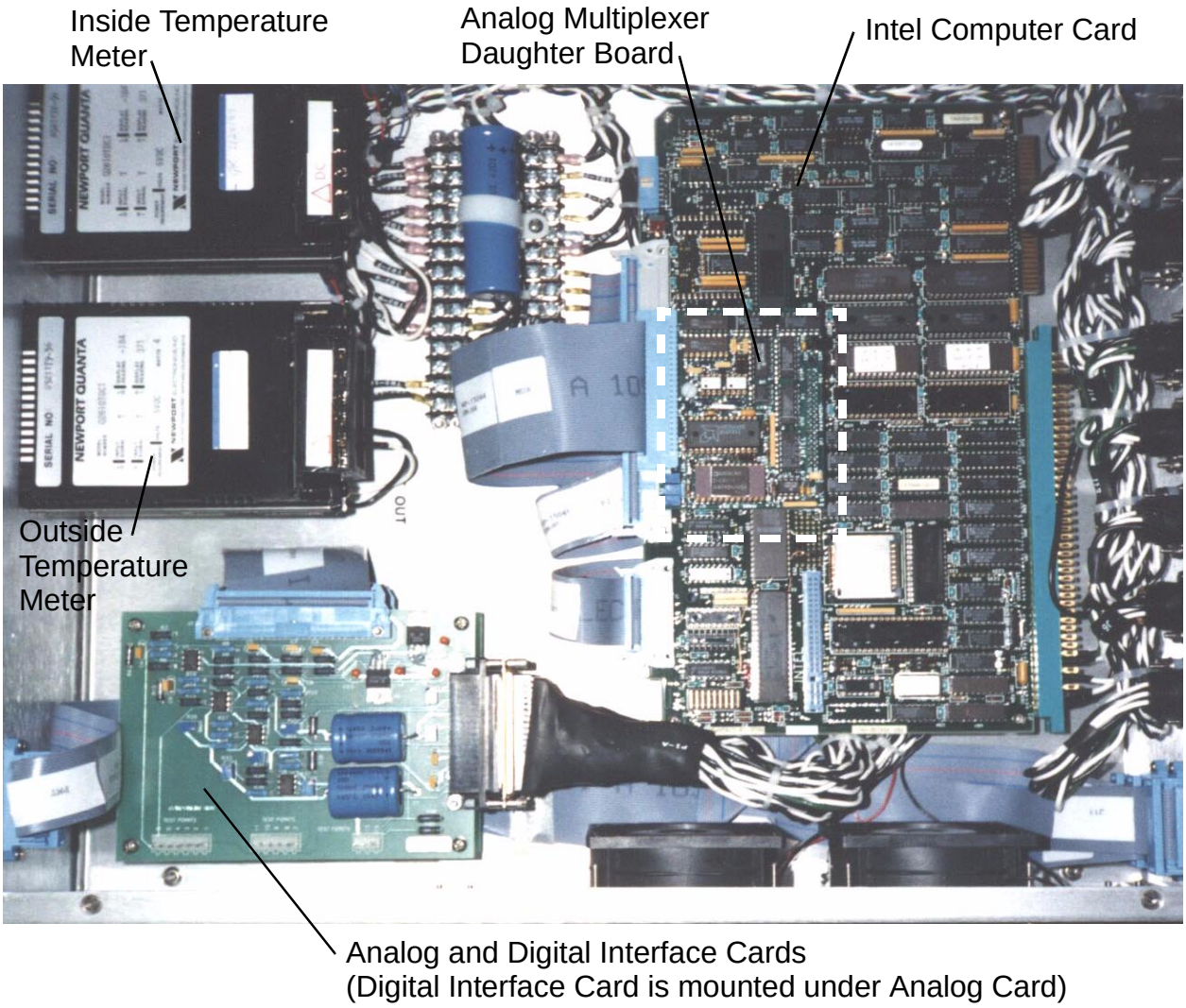

Figure 4-23 Status Monitor Internal Component Layout

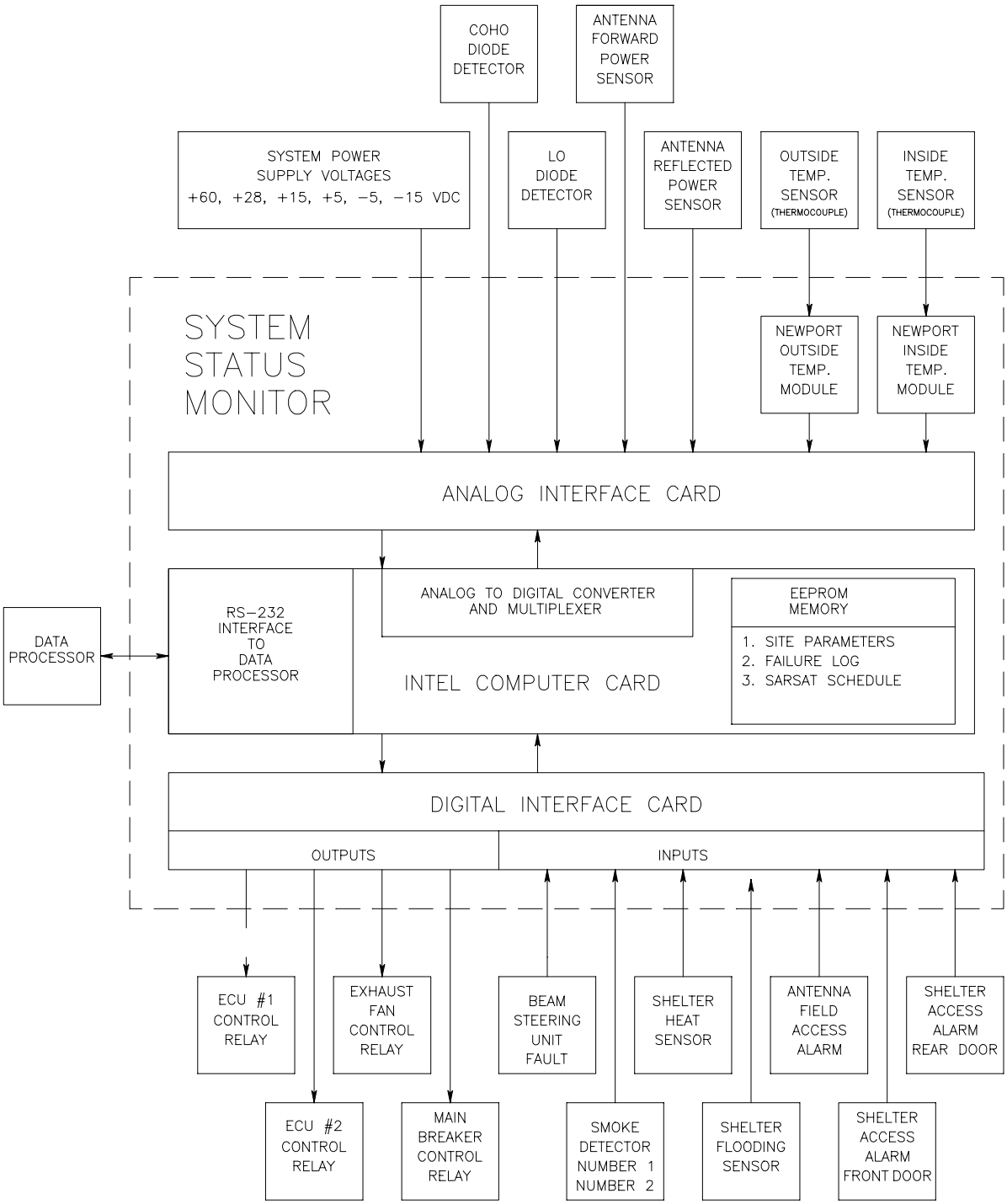

Figure 4-24 Status Monitor Interface Diagram

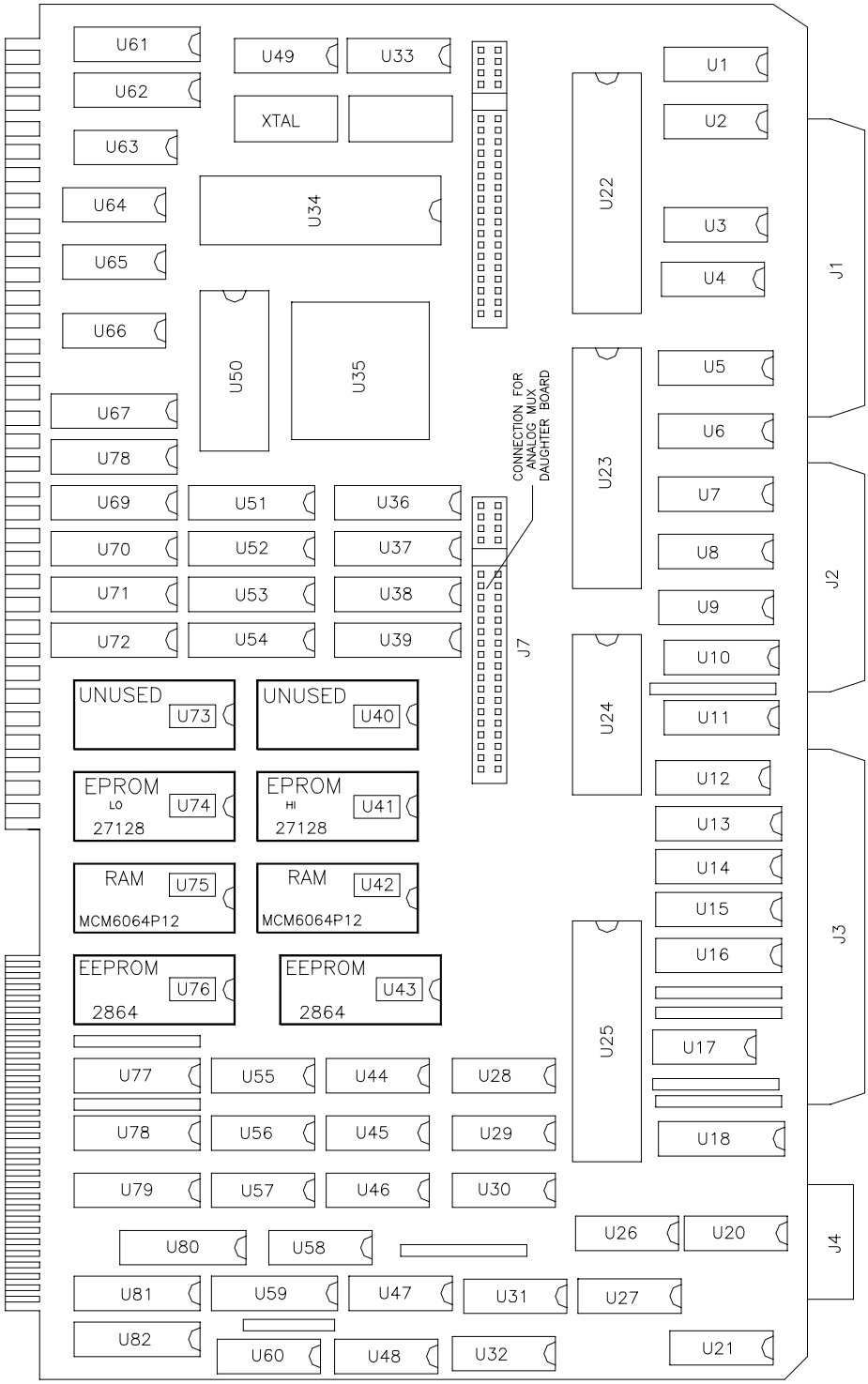

Figure 4-25 Intel Single Board Computer (SBC) Component Layout

4.6.2 Analog Interface Board

The Analog Interface Board performs the following functions;

- Provides signal conditioning (voltage division or inversion) of the system power supply voltages (+60, +28, +15, +5, -5, and -15) so these voltages can be measured by the A/D convertor of the Intel SBC.
- Provides the interface to the sensors which monitor the forward and reflected RF power of the radar antenna.
- Provides the interface to monitor the COHO and LO power levels of the RF Generator.
- Provides the interface to the meters which monitor the internal and external shelter temperatures.

For reference purposes, the Analog Interface Board component layout and schematic diagrams are provided in Figure 4-26 through Figure 4-28.

4.6.3 Digital Interface Board

The Digital Interface Board performs the following functions;

- Provides the driver circuitry to control the 4 solid-state relays for two ECUs, the Exhaust Fan, and the Main Breaker trip function.
- Monitors shelter and antenna access sensors.
- Monitors the Beam Steering Unit (BSU) for switch faults.
- Provides the driver circuitry to individually enable or disable four groups of Power Amplifier Modules in the Transmitter Cabinet.
- Monitors the shelter smoke, flooding, and heat sensors.

For reference purposes, the Digital Interface Board component layout and schematic diagrams are provided in Figure 4-29 through Figure 4-33.

4.6.4 System Status Monitor Replacement Procedure

1. Follow the standard power-down sequence in Section 2.3.

2. Remove the four mounting screws from the front panel of the SSM.

3. Slowly pull the unit to its full-out position.

4. Depress the mounting clips on type "D" connectors P1, P2, and P11, and remove them from ports J1, J2, and J11 at the rear of the SSM (see Figure 4-34).

5. Loosen the retaining nuts on plugs P3, P4, P5, P6, P7, P8, P13, and P14, and disconnect them from ports J3, J4, J5, J6, J7, J8, J13, and J14.

6. Unplug the Inside and Outside Temperature Sensor cables from ports J9 and J10. If the cables are not labeled, note the connections for future reference.

7. Disengage the slide rails and remove the SSM from the Equipment Cabinet with the rails still attached to the unit.

8. Remove the slide rails and attach them to the new System Status Monitor.

9. Install the new unit in the Equipment Cabinet.

10. Plug the Inside and Outside Temperature Sensor cables into ports J9 and J10.

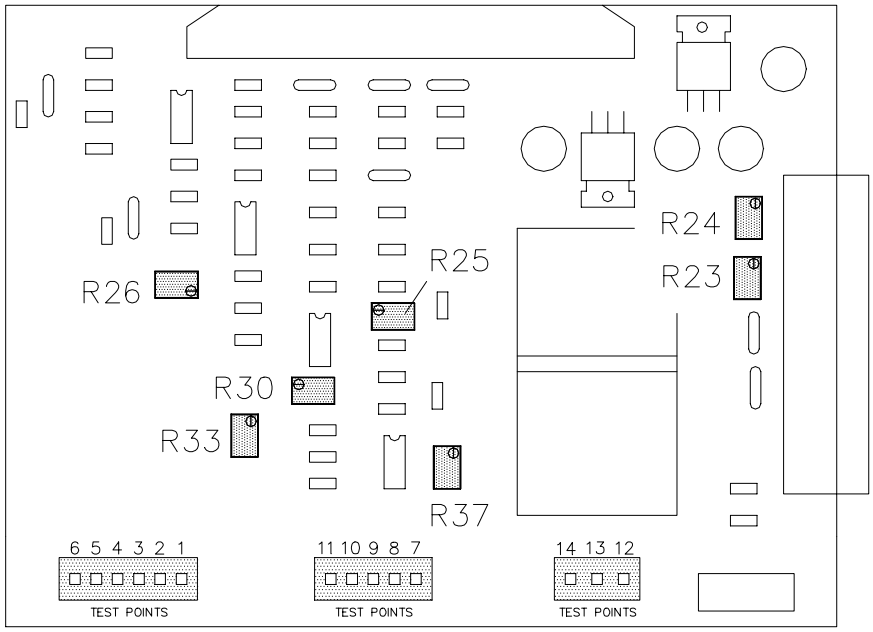

Figure 4-26 Analog Interface Board Component Layout

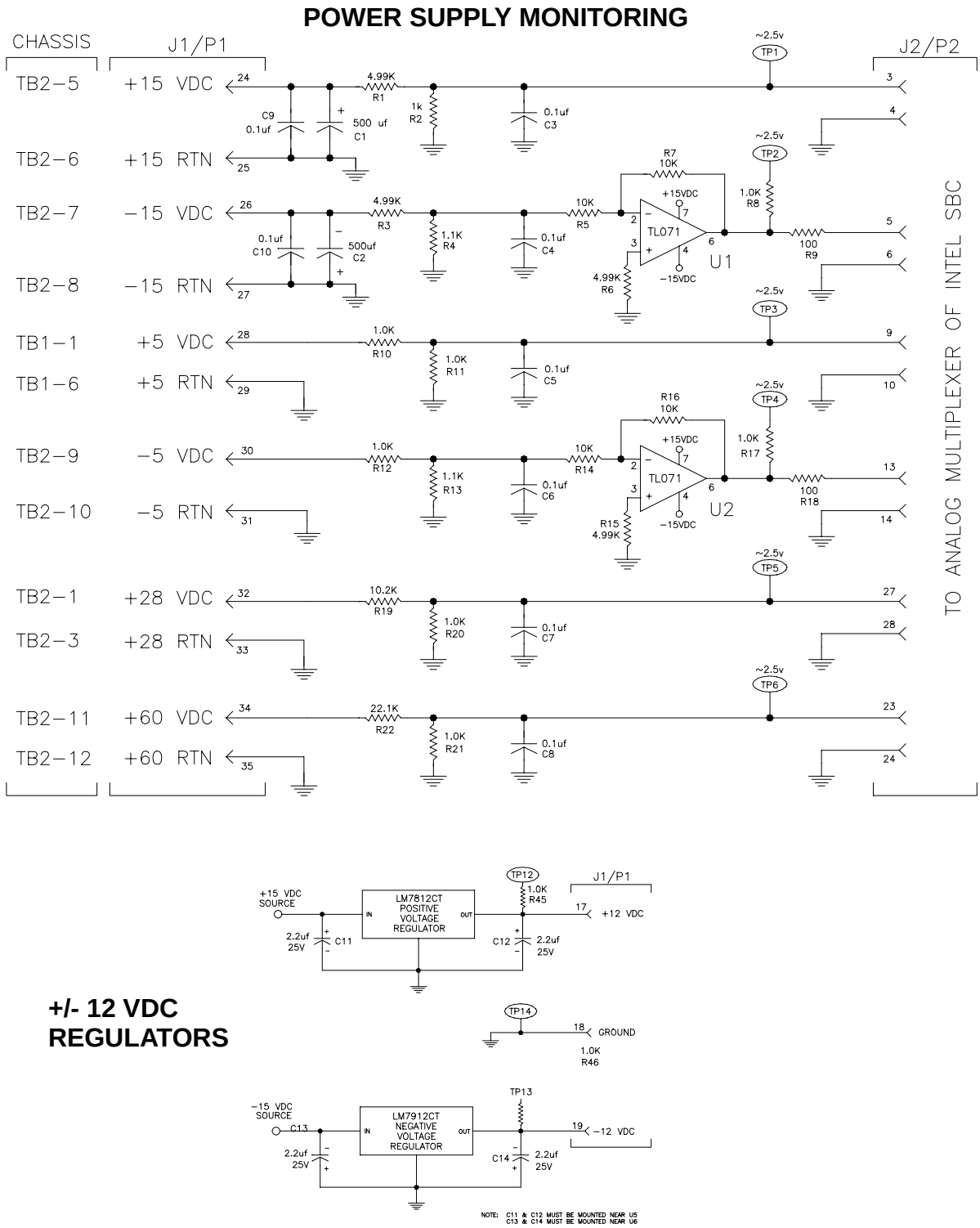

Figure 4-27 Analog Interface Board Schematic Diagram (1 of 2)

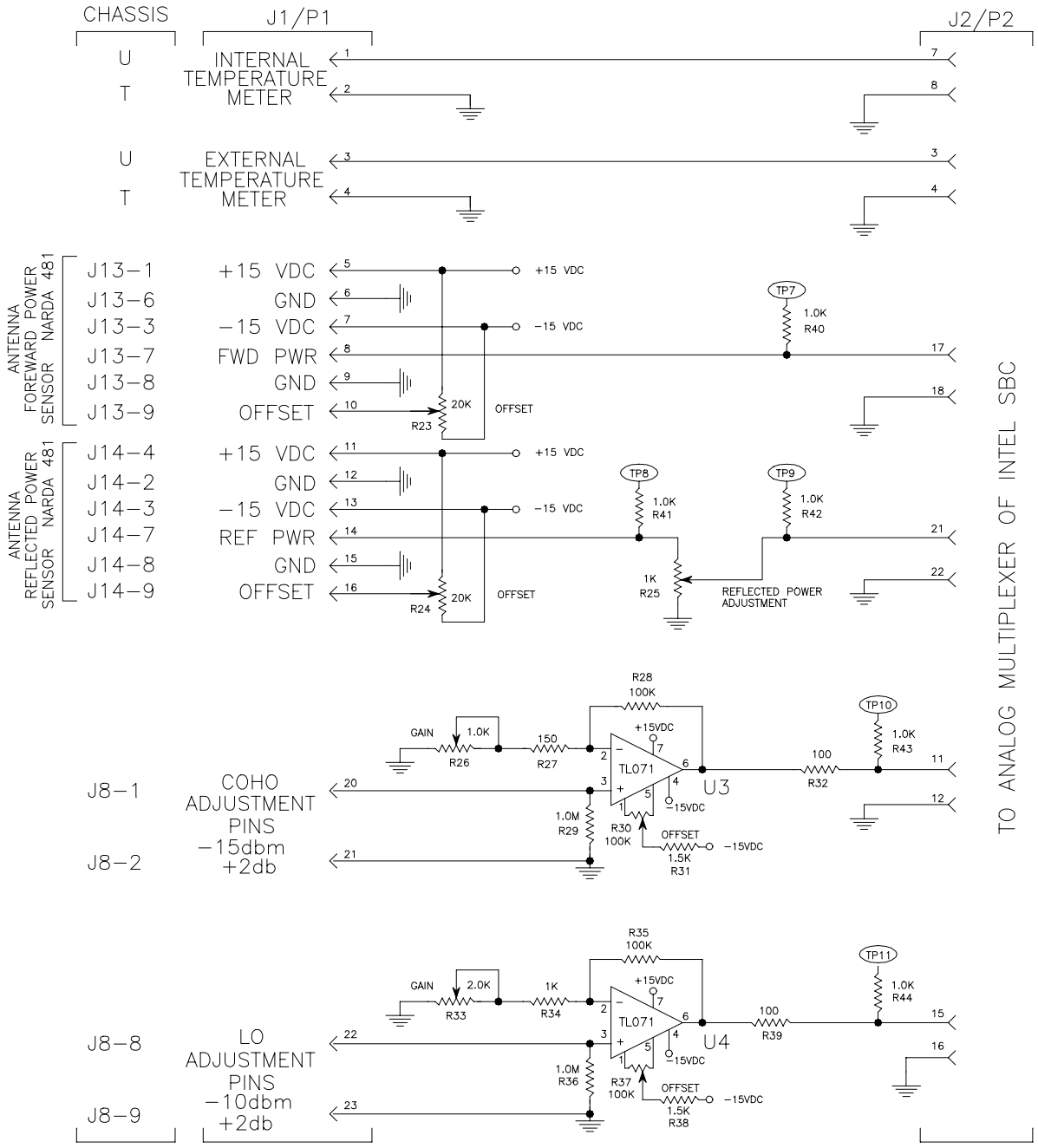

Figure 4-28 Analog Interface Board Schematic Diagram (2 of 2)

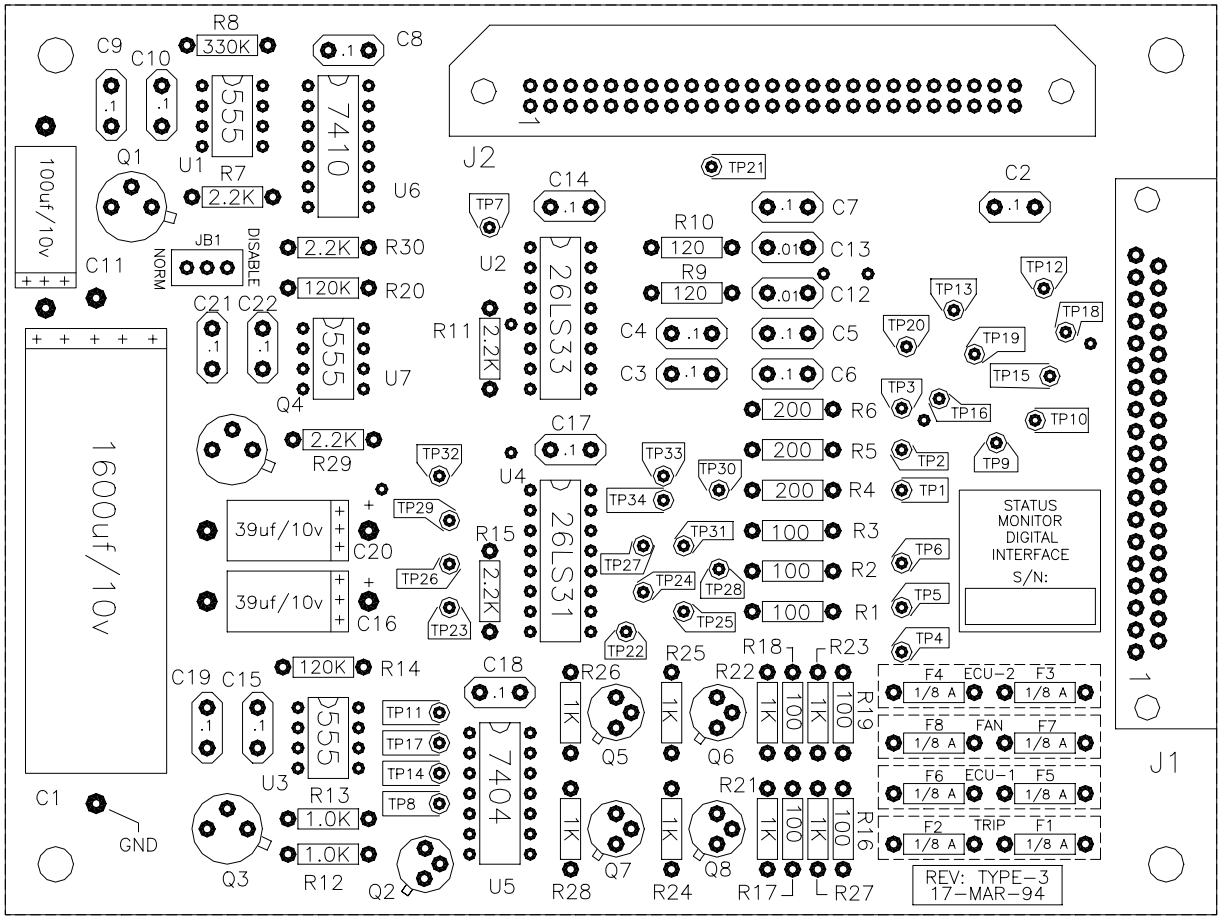

Figure 4-29 Digital Interface Board Component Layout

Access Alarm and Main Breaker Trip Control Circuitry

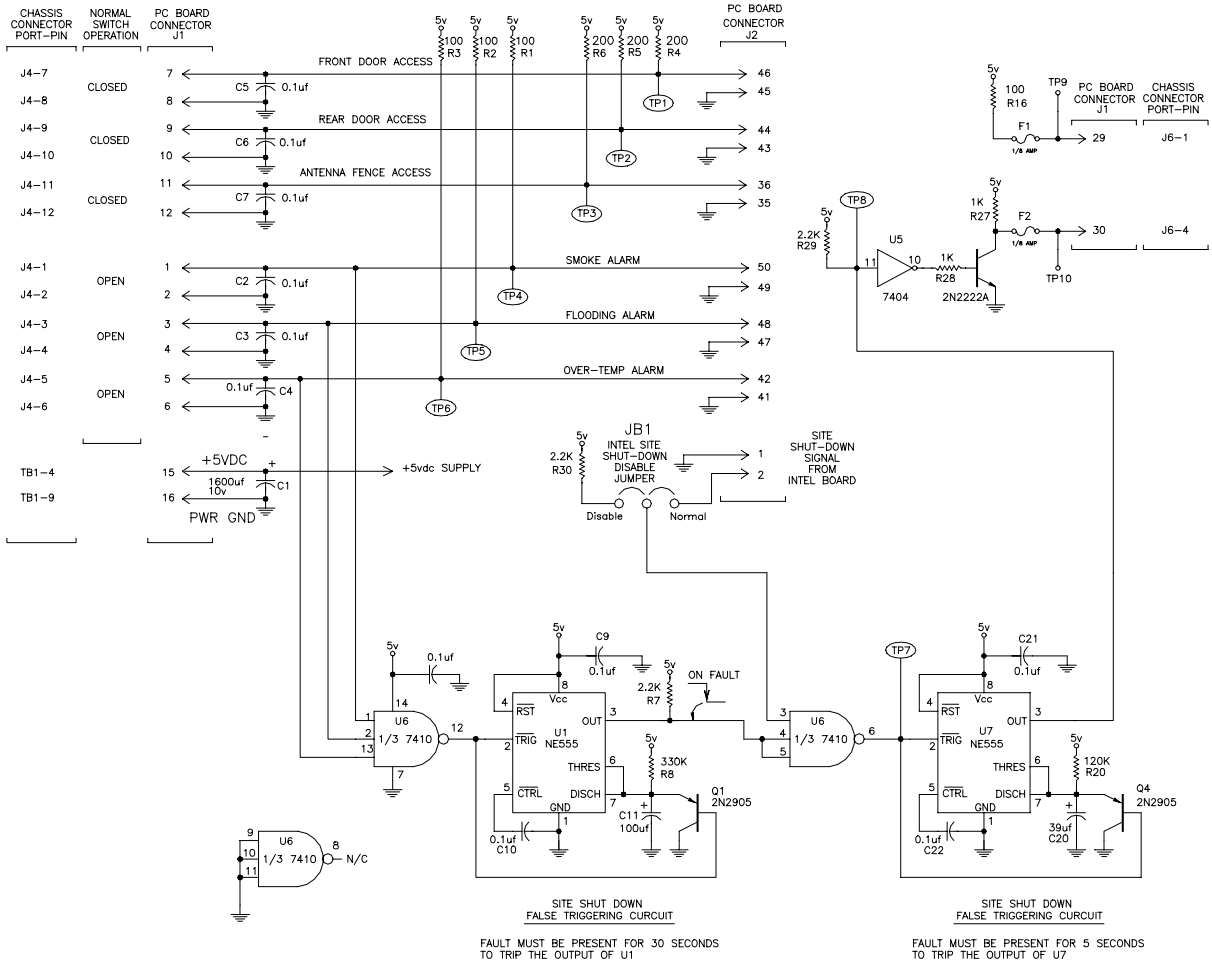

Figure 4-30 Digital Interface Board Schematic Diagram (1 of 4)

PA Module Quad Control Circuitry

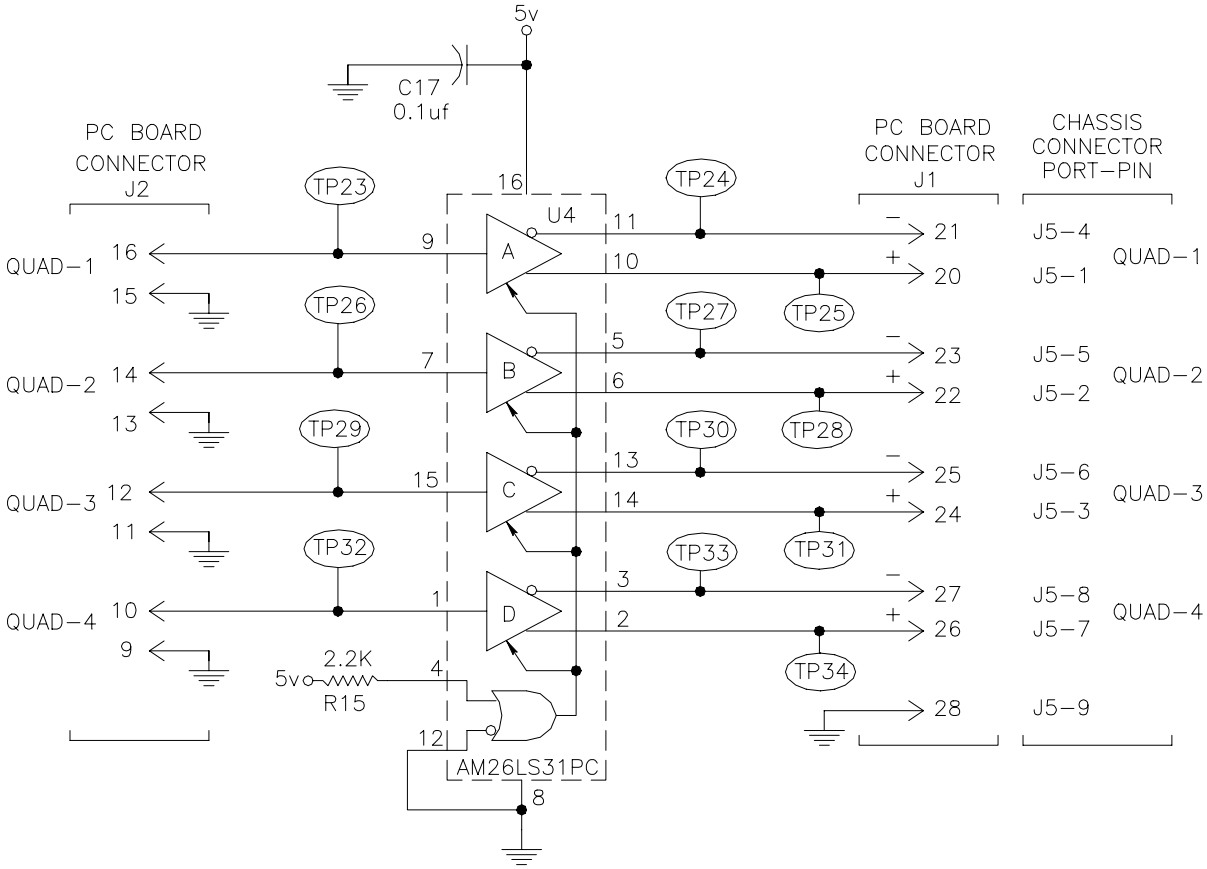

Figure 4-31 Digital Interface Board Schematic Diagram (2 of 4)

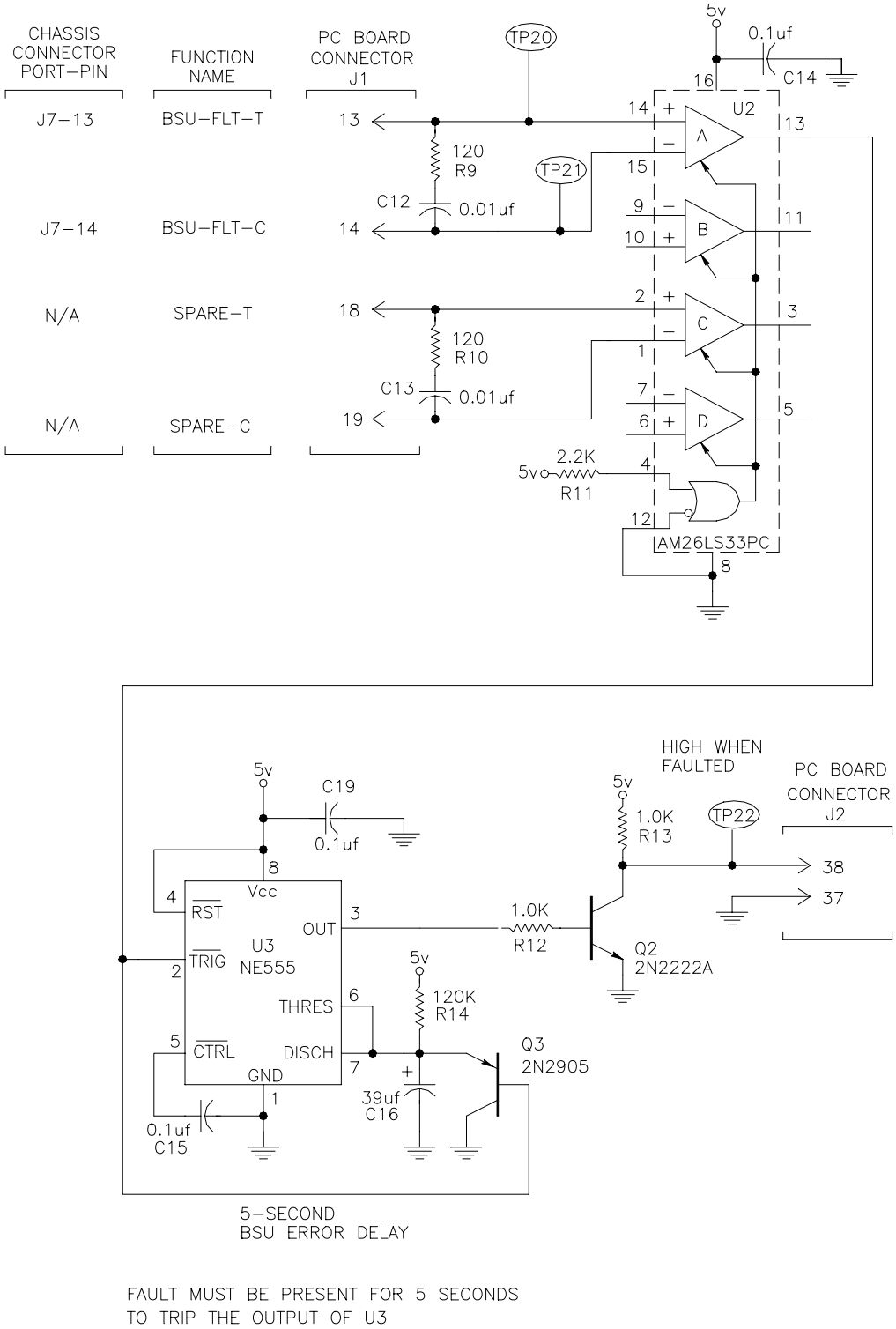

Figure 4-32 Digital Interface Board Schematic Diagram (3 of 4)

Relay Control Circuitry

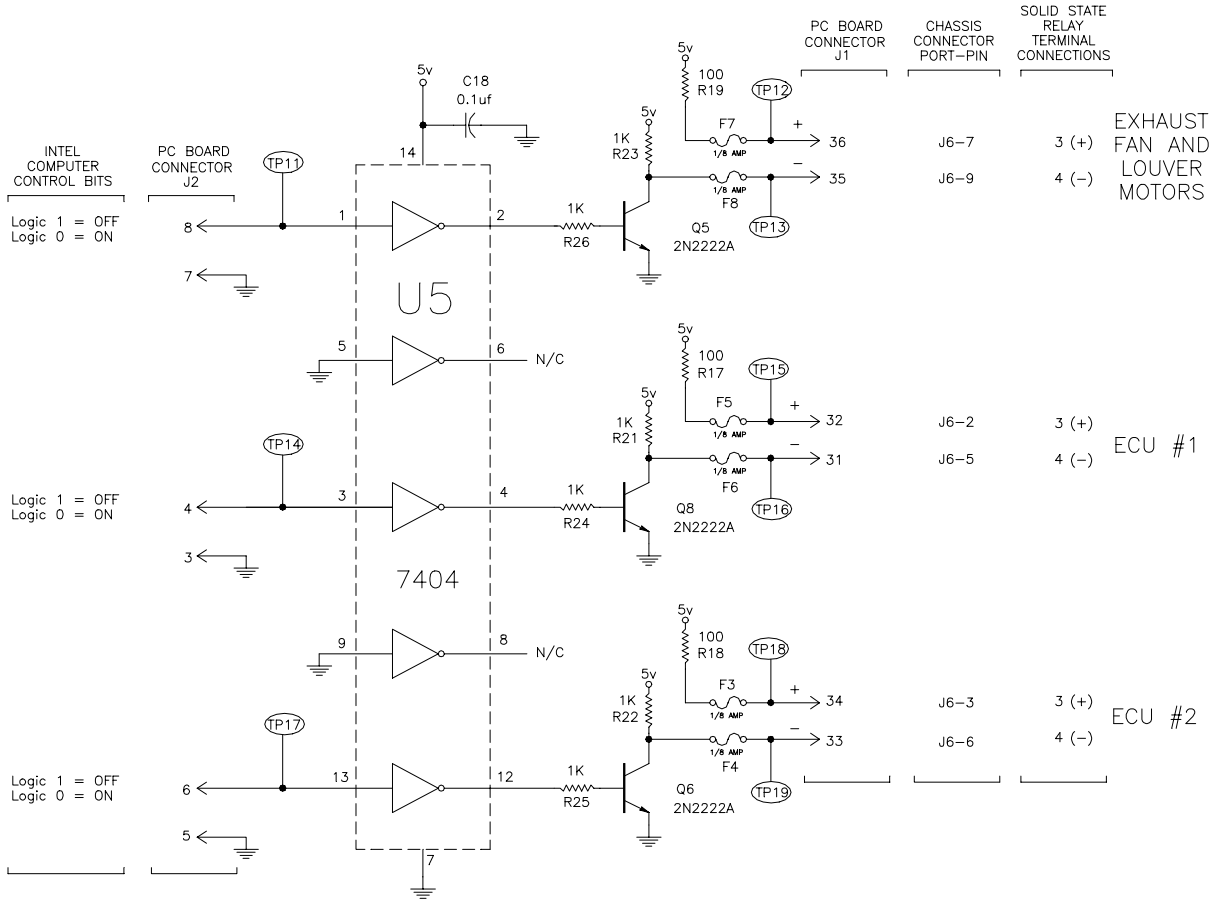

Figure 4-33 Digital Interface Board Schematic Diagram (4 of 4)

J1 = TO PA CABINET (J1), CABLE # W14
J2 = TO DATA PROCESSOR (B1), CABLE # W22
J3 = TO POWER SUPPLY #2 (J2), CABLE # W7
J4 = TO TERM BLOCK #2 (CONTROLS), CABLE # W26
J5 = TO PA CABINET (J1), CABLE # W14
J6 = TO TERM BLOCK #1 (RELAYS), CABLE # W23
J7 = DAISEY CHAIN CABLE FROM BSU (J2) TO SIGNAL PROCESSOR (J8), CABLE # W4
J8 = TO RF GENERATOR DIODE DETECTORS (J9) AND (J11), CABLE # W104
J9 = TO INSIDE TEMP. PROBE, CABLE # W25
J10 = TO OUTSIDE TEMP. PROBE, CABLE # W24
J11 = TO DATA PROCESSOR (C2), CABLE # W21
J13 = TO FORWARD POWER SENSOR (J1), CABLE # W18
J14 = TO REFLECTED POWER SENSOR (J1), CABLE # W19

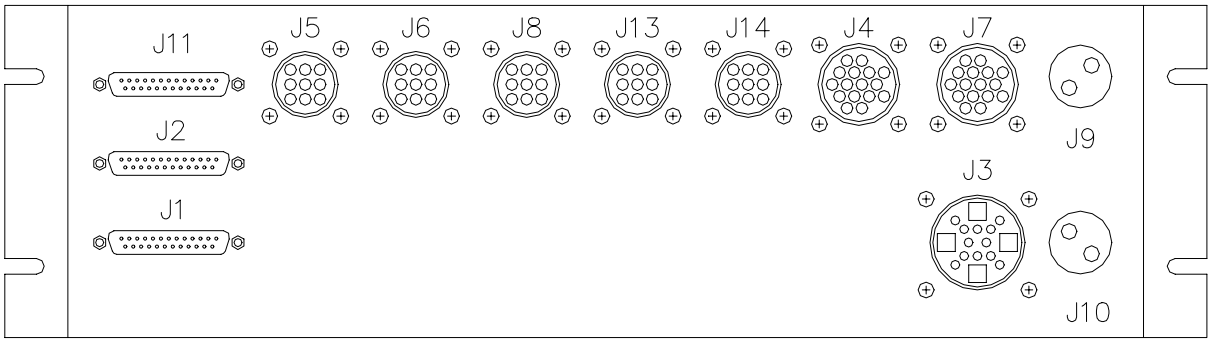

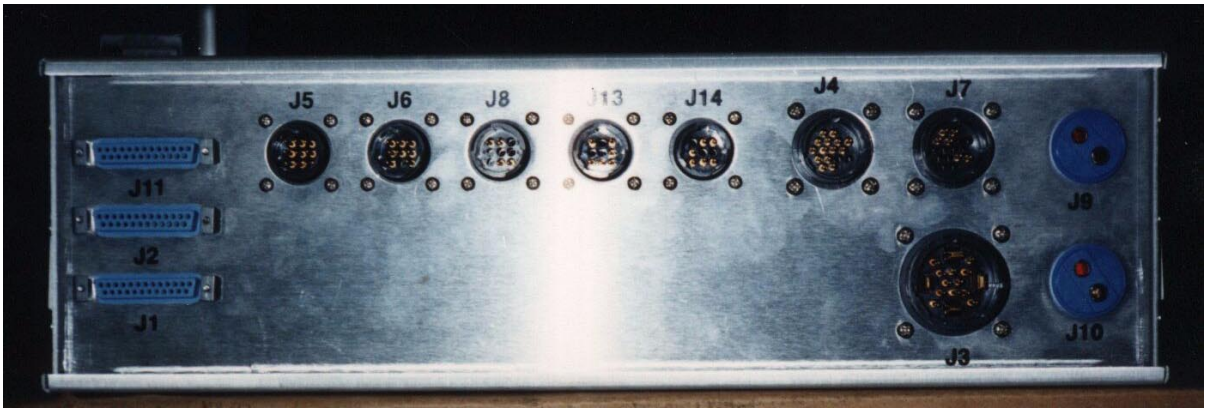

Figure 4-34 System Status Monitor Rear Panel and Cable Connections

11. Connect plugs P3, P4, P5, P6, P7, P8, P13, and P14 into ports J3, J4, J5, J6, J7, J8, J13, and J14, and tighten the retaining nuts.

12. Plug type "D" connectors P1, P2, and P11 into ports J1, J2, and J11, and secure the mounting clips on each connector.

4.6.5 System Status Monitor Calibration Procedure

When the SSM is replaced, it is necessary to re-calibrate the Diode Detectors and perform Zero Offset Adjustments to the Forward and Reflected Power Sensors. A Digital Volt Meter (DVM) is required to perform these procedures.

Coherent and Local Oscillator Trip Level Adjustment

***** WARNING *****

Profiler communications equipment (the DSU) rest on top of the RF Generator behind the air filter panel. Remove the air filter panel above the RF Generator before attempting to pull the RF Generator out from the Equipment Cabinet as shown in photo to right.

1. Remove the four mounting screws from the front panel of the RF Generator and carefully pull the unit to its full-out position.

2. Disconnect the Diode Detectors from ports J9 and J11 on the RF Generator.

3. Remove the top cover panel of the SSM.

***** CAUTION *****

While the Diode Detectors are disconnected from the RF Generator, make sure the metallic housing of the detectors does not come in contact with any other metallic components such as the rack frame or LRU covers. Isolating the detector housing will prevent erroneous meter readings from occurring during the "offset" calibrations.

4. Turn on Circuit Breaker #22 to return power to the Equipment Cabinet.

5. Connect the ground lead of the DVM to TP14(GND) on the SSM Analog Interface Board, and the positive lead to TP10(+). See Figure 4-26 for the location of the test points.

6. Adjust R30 (COHO offset) to produce 0 VDC ± 0.05 VDC.

7. Connect the Diode Detector and cable labeled RFG-P11 to port J11 on the RF Generator.

8. Adjust R26 (COHO gain) to produce 3.75 VDC ± 0.50 VDC.

9. Move the positive lead of the DVM from TP10(+) to TP11(+).

10. Adjust R37 (LO offset) to produce 0 VDC ± 0.05 VDC.

11. Connect the Diode Detector and cable labeled RFG-P9 to port J9 of the RF Generator.

12. Adjust R33 (LO gain) to produce 3.75 VDC +/- 0.50 VDC.

Zero Offset Adjustment

1. Disconnect the Narda 481 Forward Power Sensor from port J6 of the RF Generator, leaving the control cable connected to the sensor.

2. Connect the DVM between TP7(+) and TP14(GND) of the Analog Interface Board inside the SSM chassis (see Figure 4-26).

3. Adjust R23 for 0 VDC (± 10mV).

4. Remove the side panel of the BSU Cabinet (see Figure 2-4).

5. Disconnect the 3-dB pad from the reflected power port of the Directional Coupler (see Figure 5-15).

6. Connect the DVM to TP8(+) and TP14(GND) (see Figure 4-26) and adjust R24 for 0 VDC (± 10mV).

7. Reconnect the 3-dB pad to the reflected power port of the Directional Coupler.

8. Replace the side panel of the BSU Cabinet.

9. Replace the top cover panel of the SSM, push the unit back into the Equipment Cabinet, and replace the four mounting screws on the front panel.

10. Push the RF Generator back into the Equipment Cabinet and replace the four mounting screws on the front panel.

11. Turn off Breaker #22 and follow the standard power-up sequence in Section 2.4.

4.6.6 System Status Monitor EEPROM Replacement Procedure

1. Follow the standard power-down sequence in Section 2.3.

2. Remove the four mounting screws from the front panel of the SSM.

3. Slowly pull the unit to its full-out position.

4. Remove the top cover panel from the SSM.

***** CAUTION *****
The EEPROM chips can be damaged by STATIC ELECTRICITY! Always exercise anti-static precautions and use an anti-static mat and wrist strap when handling these chips.

5. Clip the anti-static wrist-strap to the chassis of the SSM or suitable ground.

6. Place the anti-static mat near the SSM and connect the mat to ground.
7. Remove U43 and U76 from the Intel SBC using the chip-pulling tool (see Figure 4-35 for locations of chips). Place the chips on the anti-static mat.

8. Carefully remove the new EEPROM chips from the anti-static protection and install the chips at locations U43 and U76 on the Intel SBC.

9. Replace the top cover panel of the SSM, push the unit back into the Equipment Cabinet, and replace the four mounting screws on the front panel.

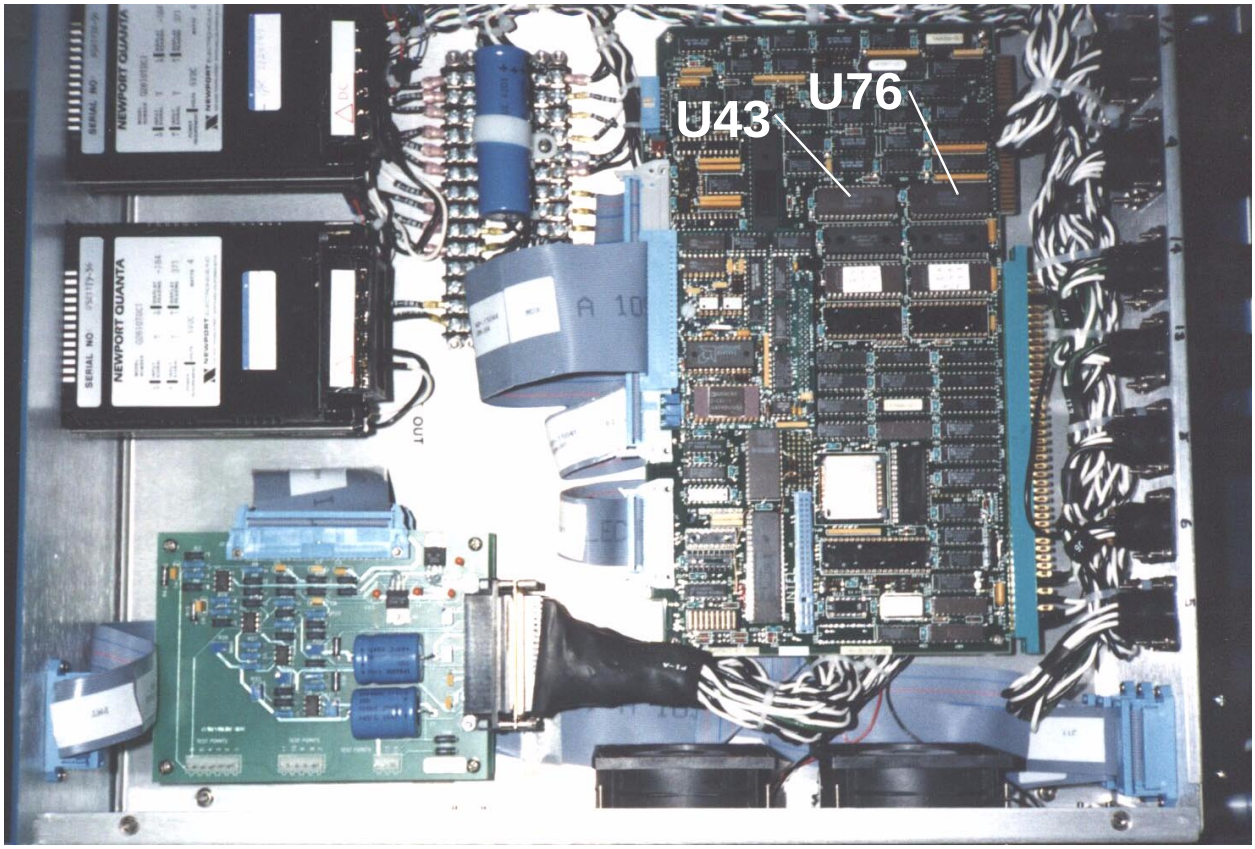

Figure 4-35 Status Monitor EEPROM Chip Replacement

***** NOTE *****

When the EEPROMs are replaced in the SSM, all system parameters, failure data entries, and the SARSAT schedule will be lost. When the radar is powered on it may come up in "Initial System Setup" mode, if it does not, use the PMT to place the radar in "Initial Setup" mode. Contact the PCC for site parameters and SARSAT schedule if required.

10. Follow the standard power-up sequence described in Section 2.4.

11. Connect the PMT and log in to the system.

12. Using the PMT, enter the parameters required by the Initial System Setup menus.

13. If a current SARSAT turn-off schedule diskette has been acquired prior to this procedure, load the schedule at this time. The radar must be in Operational mode to load the SARSAT schedule from diskette. If a current SARSAT schedule diskette is not available, contact the PCC and a schedule will be down-loaded to the profiler over the landline communications link.

4.7 Power Supplies

Power Supplies #1 and #2 are the bottom two units of the Equipment Cabinet (see Figure 4-1). Power Supply #1 (PS #1) consists of two short-circuit protected subsidiary power supplies: +5.25 VDC and +28 VDC. Power Supply #2 (PS #2) consists of the following short-circuit protected subsidiary power supplies: two (2) +60 VDCs; one +15 VDC; one -15 VDC; and one -5 VDC. Figure 4-36 shows the interfaces between various profiler components and the two power supplies. The front and rear panels of PS #1 and PS #2 are illustrated in Figure 4-37 and Figure 4-38, respectively.

The two +60 VDC subsidiary power supplies in PS #2 provide primary and backup power to the system T/R Switch. After installation, these power supplies are adjusted to +61 VDC for the primary supply and +59 VDC for the backup supply. The output of each +60 VDC power supply is connected in parallel through diodes to provide electrical isolation between the two power supplies (see Figure 4-36).

The failure of any subsidiary power supply triggers a fault in the System Status Monitor that is written to the SSM Failure Data log.

4.7.1 Power Supply Fault Isolation

Any of the components identified in Figure 4-36 may draw too much current, causing the short-circuit protection in one or more of the subsidiary power supplies to activate. For this reason, it is necessary to determine if the problem is in the power supplies or in one of the other system components.

A Digital Volt Meter (DVM) is required for the following procedures:

1. Follow the standard power-down sequence described in Section 2.3.

2. Inspect the fuses in both power supplies and replace, if necessary.

3. Disconnect all components that draw current from the power supplies. The most convenient place to do this is on the rear panel of PS #2 (see Figure 4-38).

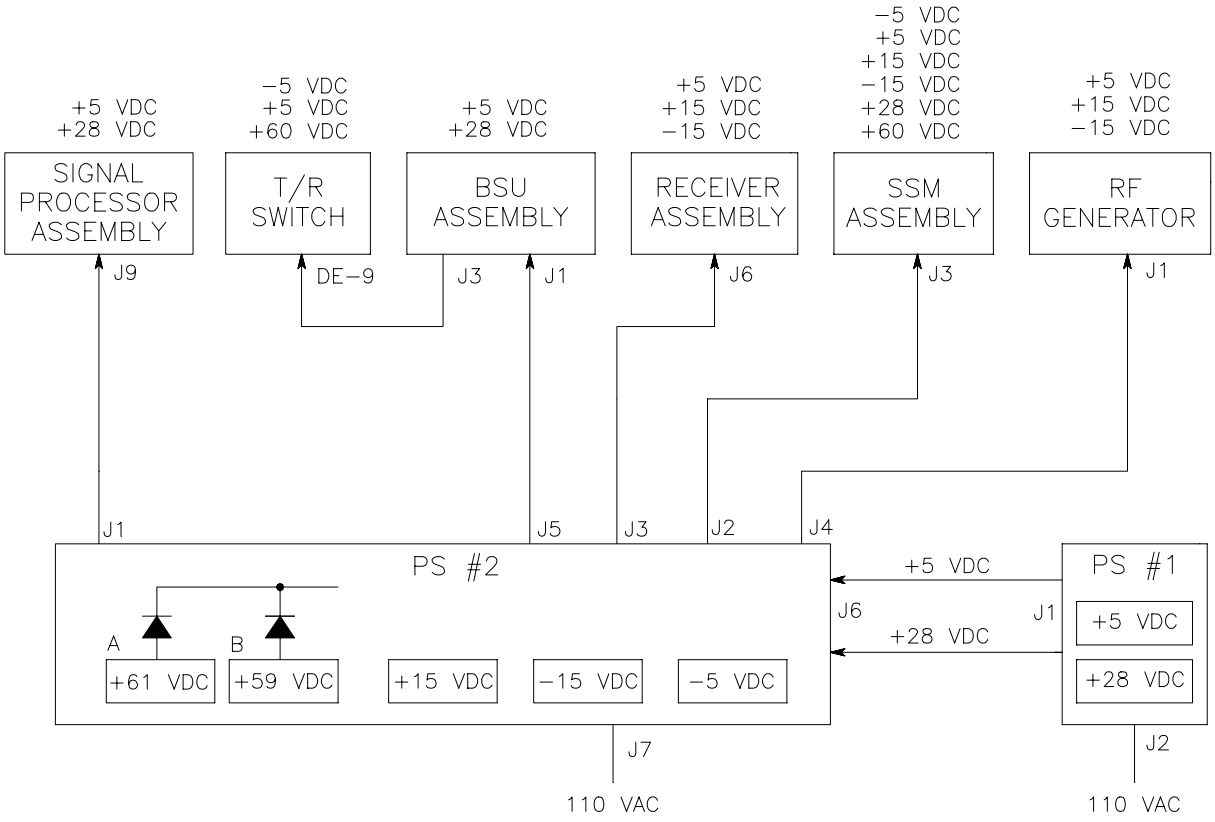

Figure 4-36 Equipment and BSU Cabinet DC Power Distribution

4. Turn on Breaker #22 to return power to the Equipment Cabinet. Measure the voltages at the output terminals of the power supplies and verify that the correct voltage levels are present. Refer to Figure 4-39 and Figure 4-40 for the location of the subsidiary power supplies in PS #1 and PS #2.

   If the voltages are out of specification, the problem has been isolated to a subsidiary power supply in PS #1 or PS #2. Disconnect cable P6 from port J6 on the rear panel of PS #2 (see Figure 4-38) to isolate the power supplies. Again measure the voltage levels to isolate the problem to one of the power supplies. See Section 4.7.2 and Section 4.7.3 for the power supply replacement procedures.

   If the measured voltages are within specification, the problem exists in one or more of the other radar components. Turn off Equipment Cabinet (Breaker #22) and re-connect cable P6 to port J6 on the rear panel of PS #2.

Power Supply #1 Front Panel

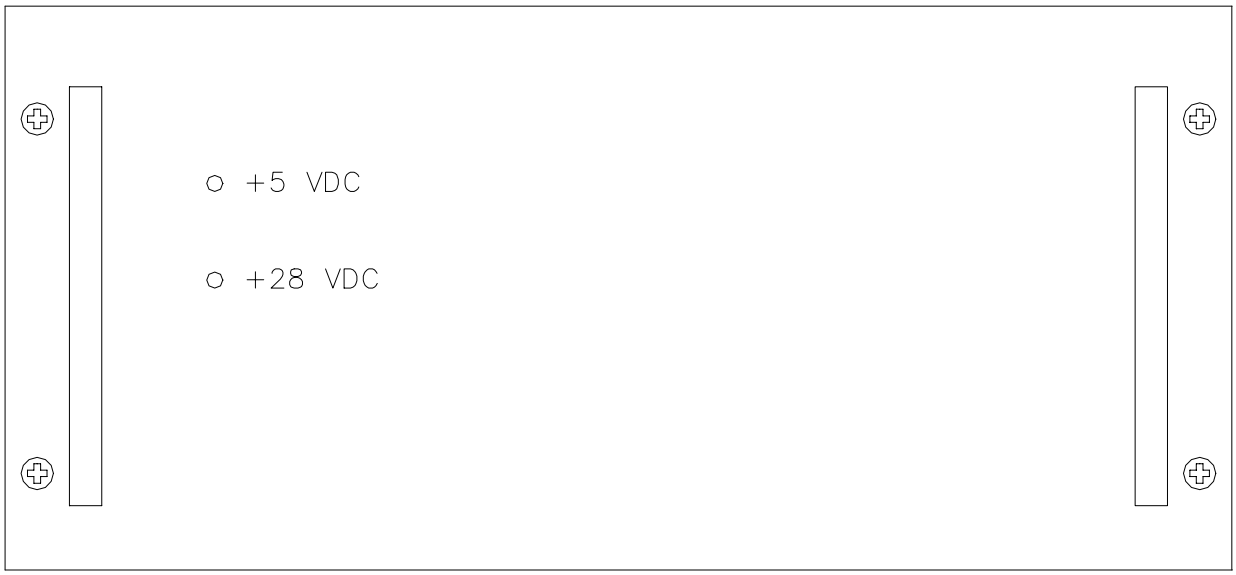

Power Supply #2 Front Panel

Figure 4-37 Power Supply #1 and #2 Front Panels

Power Supply #1 Rear Panel

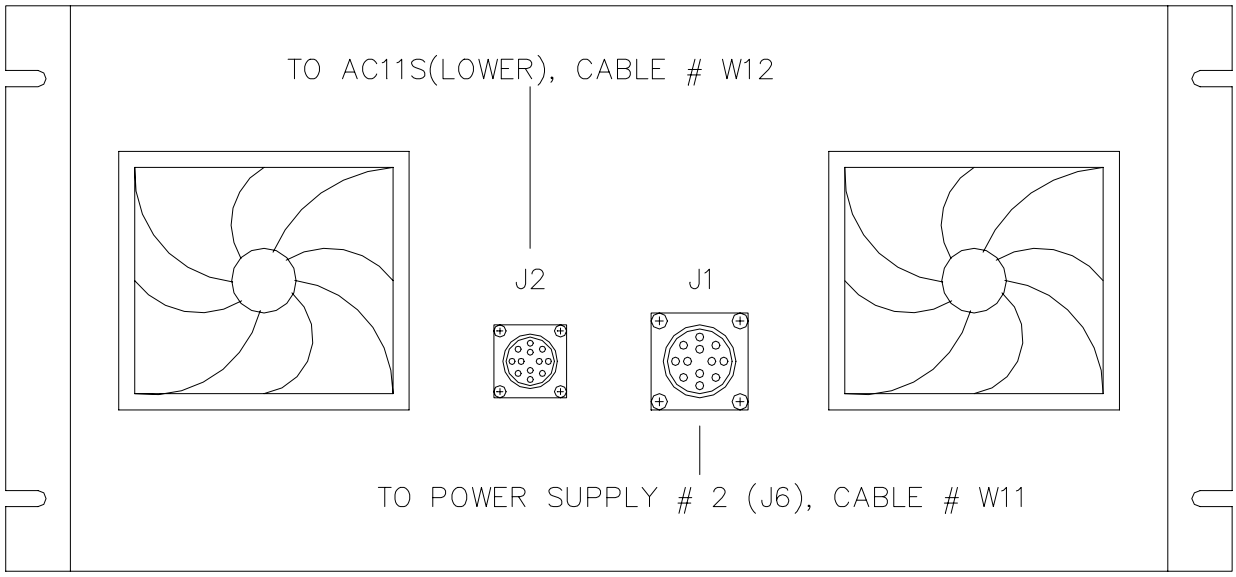

Power Supply #2 Rear Panel

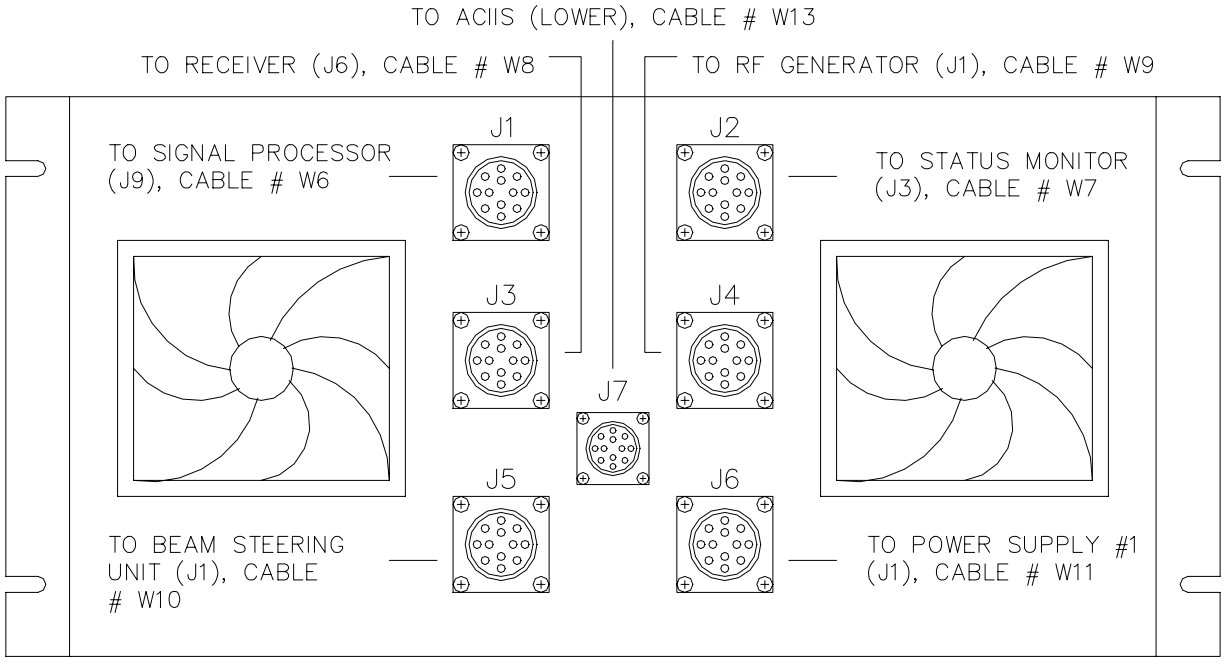

Figure 4-38 Power Supply #1 and #2 Rear Panels

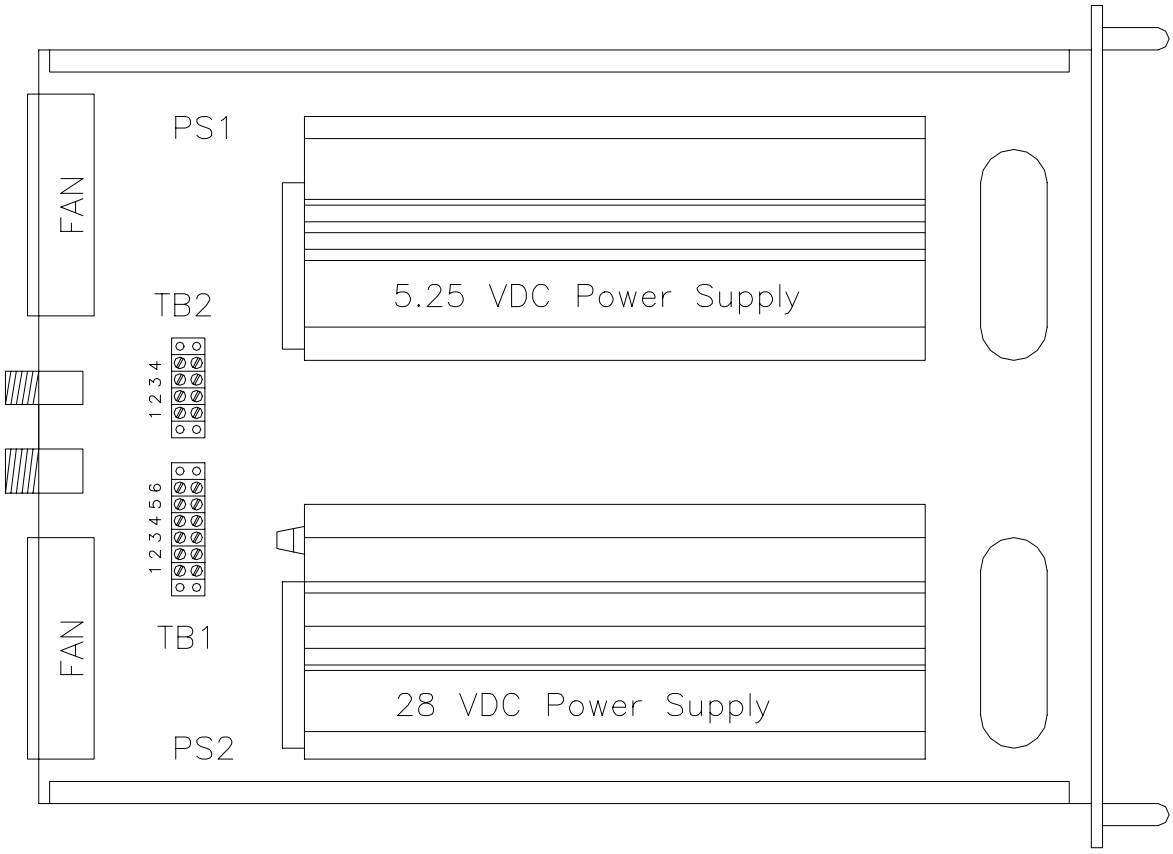

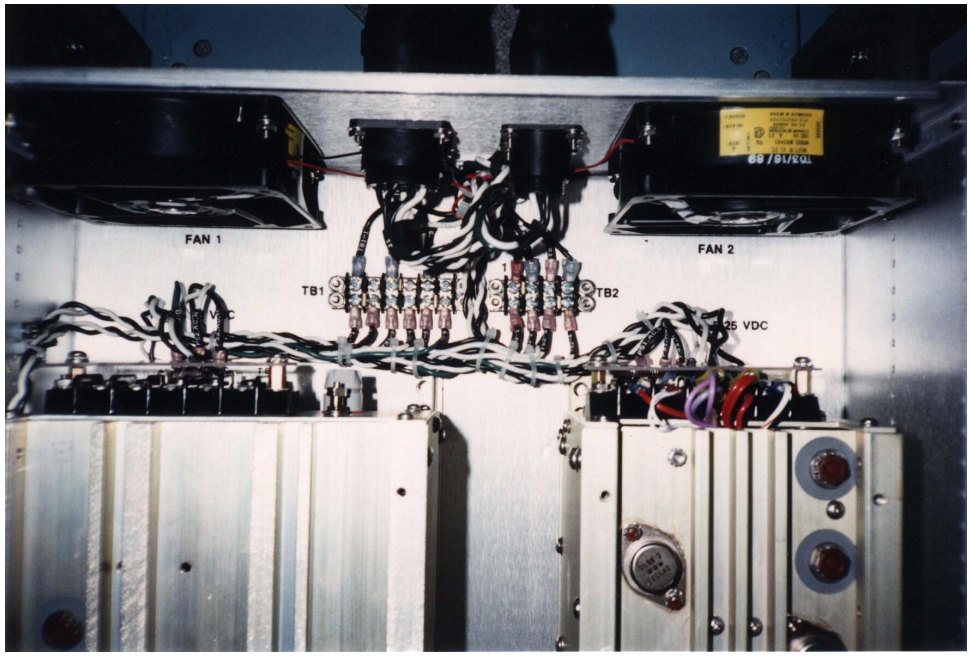

Figure 4-39 Power Supply #1 Internal Component Layout

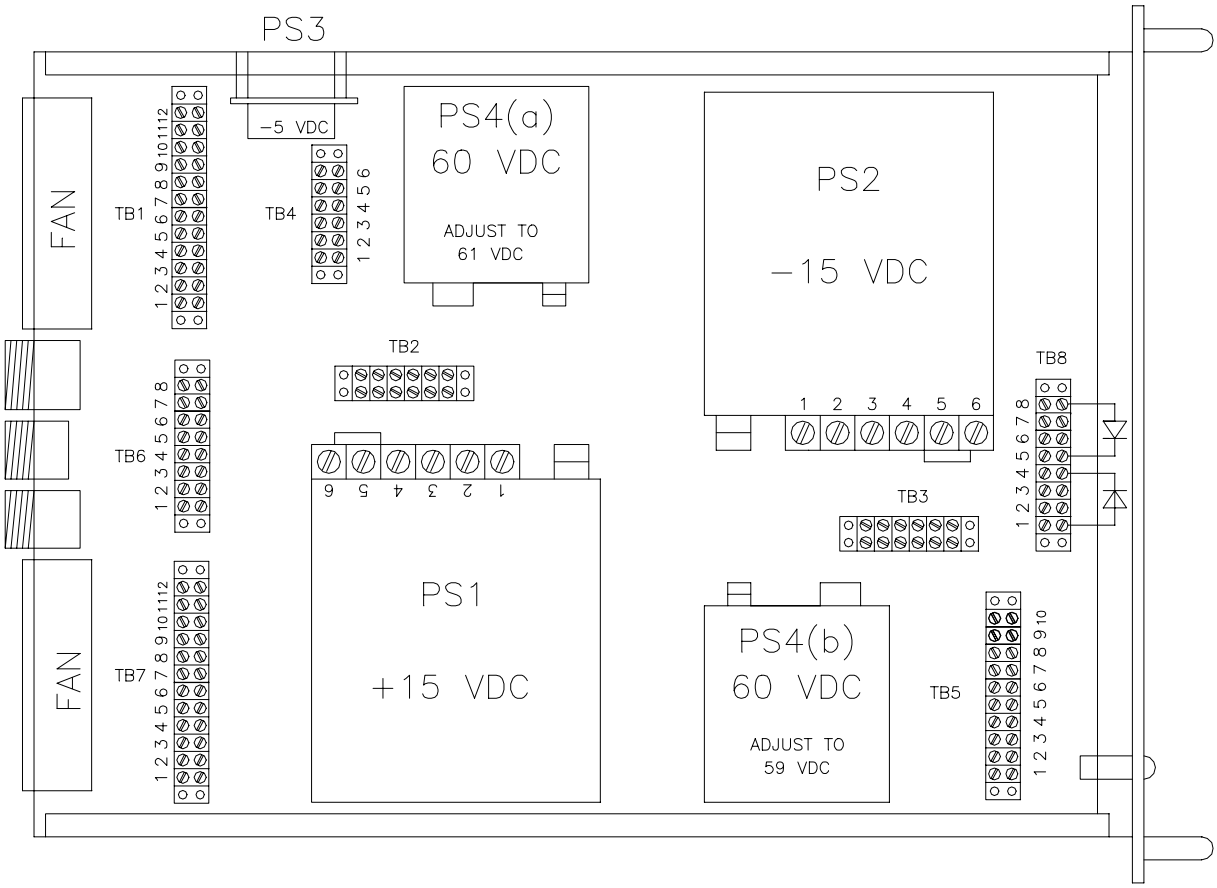

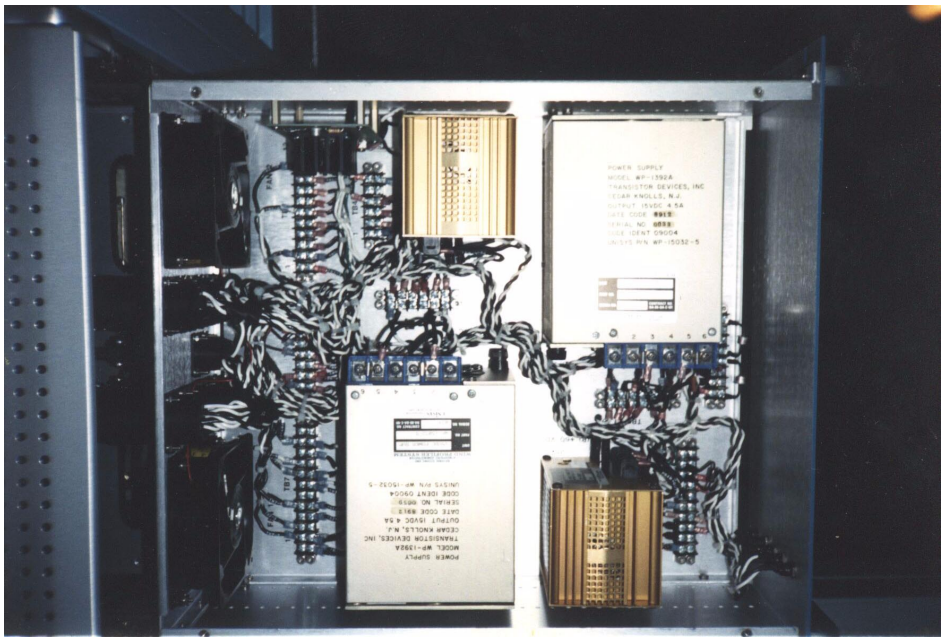

Figure 4-40 Power Supply #2 Internal Component Layout

5. Connect one of the radar components to PS #2 and return power to the Equipment Cabinet by turning on Breaker #22. Observe the indicator lights on the front panels of PS #1 and #2, and measure the voltage levels as described above. Turn off Breaker #22 and repeat this procedure until the faulty component is identified.

4.7.2 Power Supply #1 Replacement Procedures

4.7.2.1 Replacement of Subsidiary Power Supplies

1. Follow the standard power-down sequence described in Section 2.3.

2. Remove the four mounting screws from the front panel of PS #1.

3. Carefully pull the PS #1 chassis from the Equipment Cabinet to its full-out position and remove the top cover of the unit.

4. Locate the subsidiary power supply to be replaced (see Figure 4-39) and remove its mounting screws from the underside of the chassis.

5. Disconnect the AC and DC leads from the appropriate terminal block and remove the faulted power supply from the chassis.

6. Install the new subsidiary power supply in the chassis and connect the appropriate AC and DC leads.

7. Replace the mounting screws from the underside of the chassis.

8. Replace the top cover of the chassis and reconnect all power connectors on the rear panel.

9. Push PS #1 into the Equipment Cabinet and replace the mounting screws on the front panel.

10. Follow the standard power-up sequence described in Section 2.4.

4.7.2.2 Replacement of the Entire Power Supply #1 Unit

1. Follow the standard power-down sequence described in Section 2.3.

2. Remove the four mounting screws from the front panel of PS #1.

3. Slowly pull the PS #1 chassis from the Equipment Cabinet to its full-out position.

4. Loosen the retaining nut on plugs P1 and P2 and remove them from connectors J1 and J2 on the rear panel of the unit.

5. Disengage the slide rails and remove PS #1 from the Equipment Cabinet with the rails still attached to the unit.

6. Remove the slide rails from the old unit and attach them to the new PS #1.

7. Install the new PS #1 in the Equipment Cabinet.

8. Connect Plugs P1 and P2 to ports J1 and J2 and tighten the retaining nuts on the plugs.

9. Push the unit back into the cabinet and replace the mounting screws on the front panel.

10. Follow the standard power-up sequence described in Section 2.4.

4.7.3 Power Supply #2 Replacement Procedures

4.7.3.1 Replacement of Subsidiary Power Supplies

1. Follow the standard power-down sequence described in Section 2.3.

2. Remove the four mounting screws from the front panel of PS #2.

3. Slowly pull the PS #2 chassis from the Equipment Cabinet to its full-out position and remove the top cover of the unit.

4. Locate the subsidiary power supply to be replaced (see Figure 4-40) and remove its mounting screws from the underside of the chassis.

5. Disconnect the AC and DC leads from the appropriate terminal block and remove the faulty power supply from the chassis.

6. Install the new subsidiary power supply in the chassis and connect the appropriate AC and DC leads.

7. Replace the mounting screws from the underside of the chassis. If replacing a +60 VDC subsidiary supply, perform the following adjustments:

Turn on Breaker #22 to return power to the Equipment Cabinet. Use a DVM to measure the voltage output of the subsidiary supplies directly at their output terminals. Power supply 4A should be adjusted to +61 VDC and power supply 4B should be adjusted to +59 VDC.

8. Replace the top cover of the chassis and reconnect all power connectors on the rear panel.

9. Push PS #2 into the Equipment Cabinet and replace the mounting screws on the front panel.

10. Follow the standard power-up sequence described in Section 2.4.

4.7.3.2 Replacement of the Entire Power Supply #2 Unit

1. Follow the standard power-down sequence described in Section 2.3.

2. Remove the four mounting screws from the front panel of PS #2.

3. Slowly pull the PS #2 chassis from the Equipment Cabinet to its full-out position.

4. Loosen the retaining nuts on plugs P1-P7 and remove the plugs from connectors J1-J7 on the rear panel of the unit.

5. Disengage the slide rails and remove PS #2 from the Equipment Cabinet with the rails still attached to the unit.

6. Remove the slide rails from the old unit and attach them to the new PS #2.

7. Install the new PS #2 in the Equipment Cabinet.

8. Connect plugs P1-P7 to ports J1-J7 and tighten the retaining nuts on the plugs.

9. Push the unit back into the cabinet and replace the mounting screws on the front panel.

10. Follow the standard power-up sequence described in Section 2.4.

THIS PAGE INTENTIONALLY LEFT BLANK

5 Beam Steering Unit Cabinet

The Beam Steering Unit (BSU) Cabinet is located near the antenna field access door as illustrated in Figure 2-4 and Figure 2-6. The front view of the BSU Cabinet is shown in Figure 5-1, and the internal component layout of the cabinet in Figure 5-2.

The BSU Cabinet contains the following items: the Beam Steering Unit (BSU) Assembly; the Five-Way Power Divider; the Directional Coupler; the RF Limiter (usually referred to as the Limiter); the Transmit/Receive (T/R) Switch; the Coaxial Circulator (usually referred to as the Circulator); the Receiver Assembly; and the Reflected Power Sensor.

5.1 Type 2 449 MHz Receiver Assembly

The Type 2 Receiver Assembly is located above the BSU Assembly in the Beam Steering Unit Cabinet (see Figure 5-2). The Type 2 Receiver Assembly is a complete redesign of the original Type 1 404 MHz Receiver and is further modified to operate at 449 MHz. Design enhancements include; more rugged mechanical structure, better noise stability, and a modular input amplifier. The Type 2 Receiver is a superheterodyne design that performs an analog-to-digital (A/D) conversion of the returned Doppler-shifted signal before sending it to the Signal Processor Assembly.

5.1.1 Type 2 Receiver Replacement Procedure

Estimated time to complete procedures: 2-5 hours on site.

Required Tools and Test Equipment

• 5/16" Open End Wrench	for SMA connector removal & installation
• #2 Phillips Head Screwdriver	for chassis removal, installation, and STC alignment
• #2 Flat Head Screwdriver	for connector removal and installation
• Small Flat Head Screwdriver	for connector removal and installation
• 60-100MHz Oscilloscope	for STC alignment
• Alignment Tool (tweeker)	provided with the Type II Receiver for STC alignment and IF gain adjustment
• SMA (M) to BNC (F) Adaptor	for STC alignment
• 6' RG-58 Cable, BNC (m)-(m)	for STC alignment
• 50 Load	for Receiver Noise/Gain measurement and adjustment

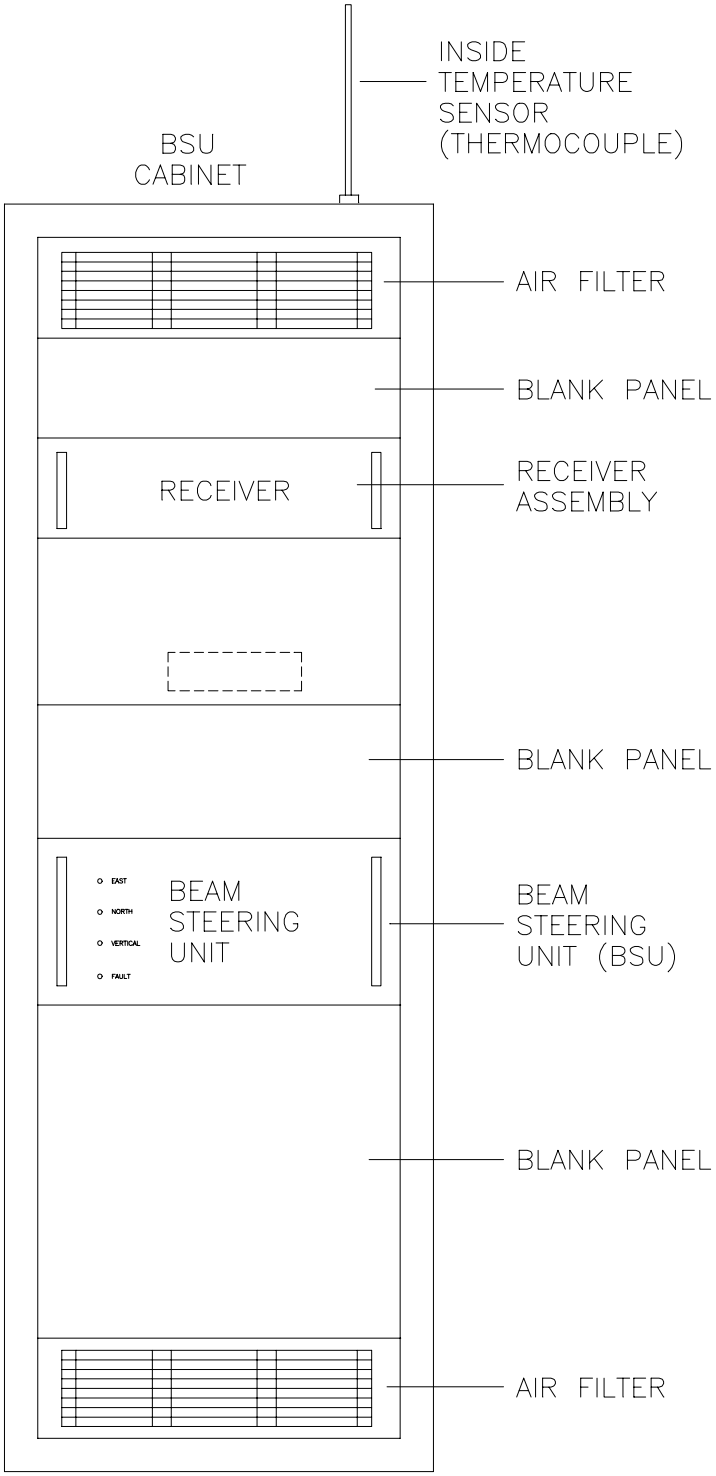

Figure 5-1 Beam Steering Unit (BSU) Cabinet Front Panel

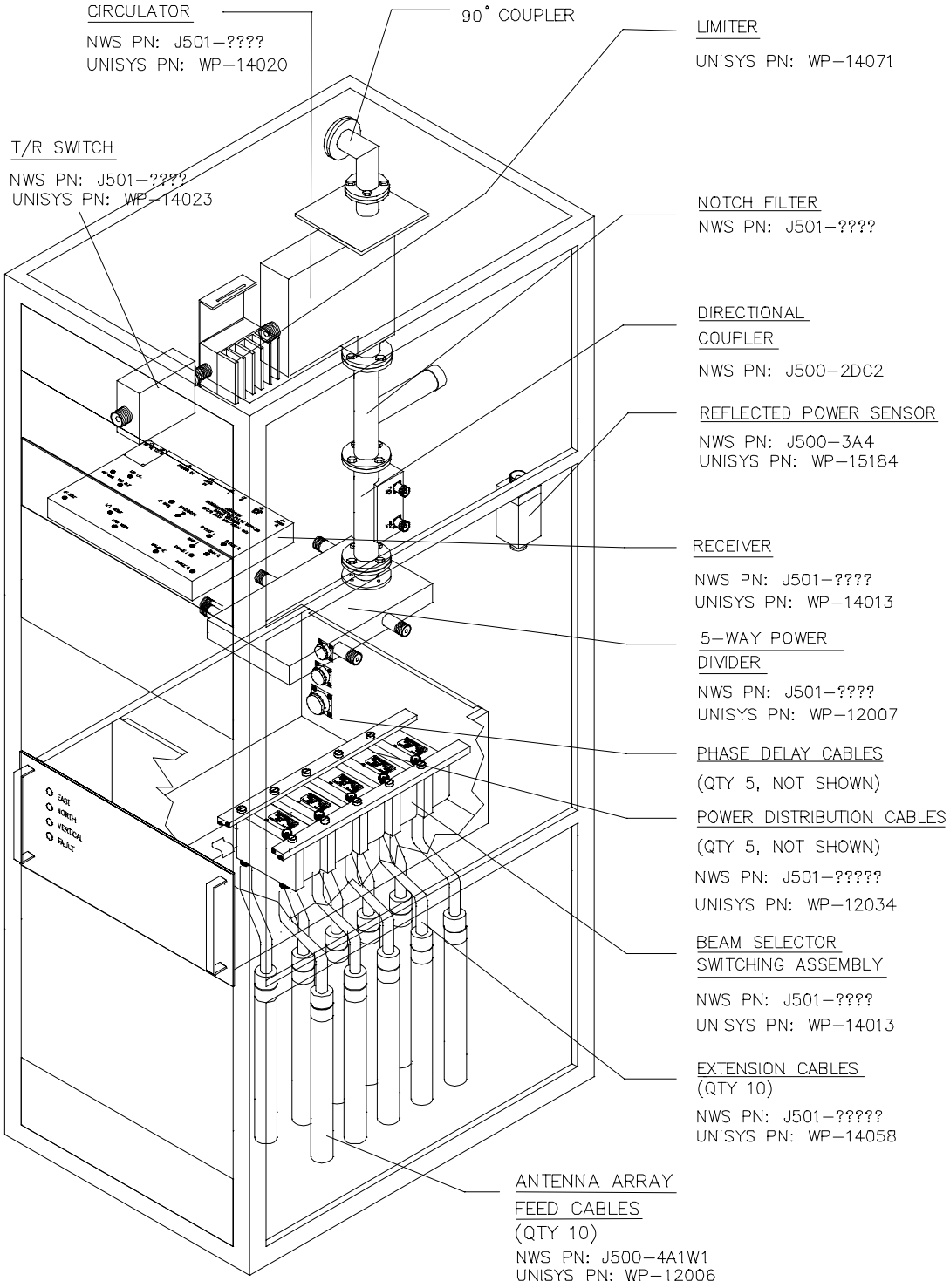

Figure 5-2 Beam Steering Unit (BSU) Cabinet Internal Component Layout

Receiver Removal Procedure

1. Power down the profiler using the standard power-down sequence described in Section 2.3.

2. Remove the side panel from the BSU Cabinet.

3. Disconnect the coaxial cables from ports J2 (LO) and J4 (COHO) on the rear panel of the Receiver (see Figure 5-3).

4. Disconnect the cables from ports J5 (control) and J3 (output) on the rear panel of the Receiver.

5. Disconnect the coaxial cable from port J1 (RF Input) on the rear panel of the Receiver.

6. Disconnect the power cable from the port J8 on the rear panel of the Receiver.

7. Remove the four mounting screws from the front panel of the Receiver and slide the unit out the front of the BSU Cabinet.

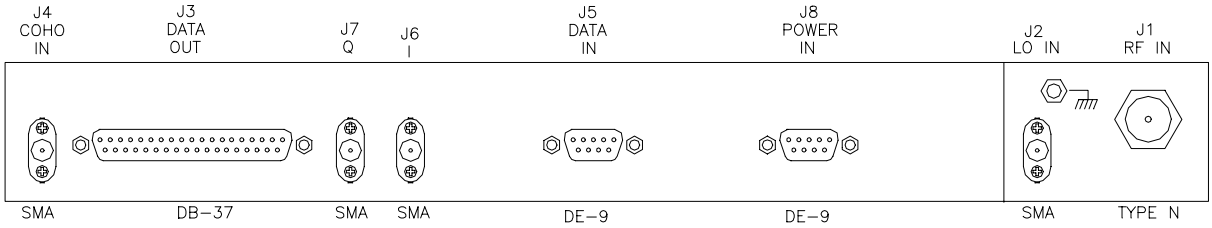

Figure 5-3 Type 2 Receiver Rear Panel

Type 2 Receiver Installation Procedure

1. Install the Type 2 Receiver in the BSU Cabinet and secure the four mounting screws on the front panel.

2. Attach the adaptor cable WP-14064 (supplied with the Type 2 Receiver) to the existing power cable, and connect the adaptor cable to port J8 on the rear panel of the Type 2 Receiver.

3. Reconnect the interface cables to ports J2, J3, J4, and J5 on the rear panel of the Type 2 Receiver (see Figure 5-3).

4. Connect the braided ground strap (supplied with the Type 2 Receiver) to the ground lug (located above J2) on the rear panel of the Type 2 Receiver. Attach the other end of the braided ground strap to the BSU Cabinet frame using an existing bolt or screw.

5.1.2 Type 2 Receiver Noise Measurement

A proven method of calibrating the Receiver gain is to use the Profiler's signal processing to measure the Receiver noise level. During this calibration, a 50 ohm load is used to terminate the input of the Receiver (J1) to isolate it from any external noise sources. During the measurement, the profiler should be cycling normally in Operational Mode. The Profiler Maintenance Terminal (PMT) is used to display the value of the system noise.

1. Attach a 50 ohm terminator load to RF IN (put) port (J1) on the rear panel of the Type 2 Receiver.

2. Power up the Profiler using the sequence described in Section 2.4 and wait for the system to begin cycling normally.

3. Connect the PMT Interface Cable to the front panel of the Status Monitor, and power-up the PMT (laptop computer).

4. Once the PMT has logged onto the profiler, place the profiler into *Maintenance Mode*. The Profiler's *Diagnostic Spectrum* parameters need to be set to a specific beam and range gate. Contact the PCC at (303) 497-6033 and technicians will provide the desired beam and range gate parameters for the diagnostic spectrum.

5. After the Diagnostic Spectrum and been set and the radar is returned to *Operational Mode*, let the radar go through one or two complete beam cycles.

*** NOTE ***

One complete beam cycle is defined as follows:

East High ->East Low ->North High ->North Low ->Vertical Hi ->Vertical Low

The indicator LEDs on the front panel of the BSU Switch Assembly can be used to determine what beam the profiler is currently in.

6. Select *Display Current Output* from the PMT Main Menu. Select *Landline* from the menu. Select *Status Data* from the menu. The *System Status Data Block* screen will appear on the PMT (see Figure 5-4).

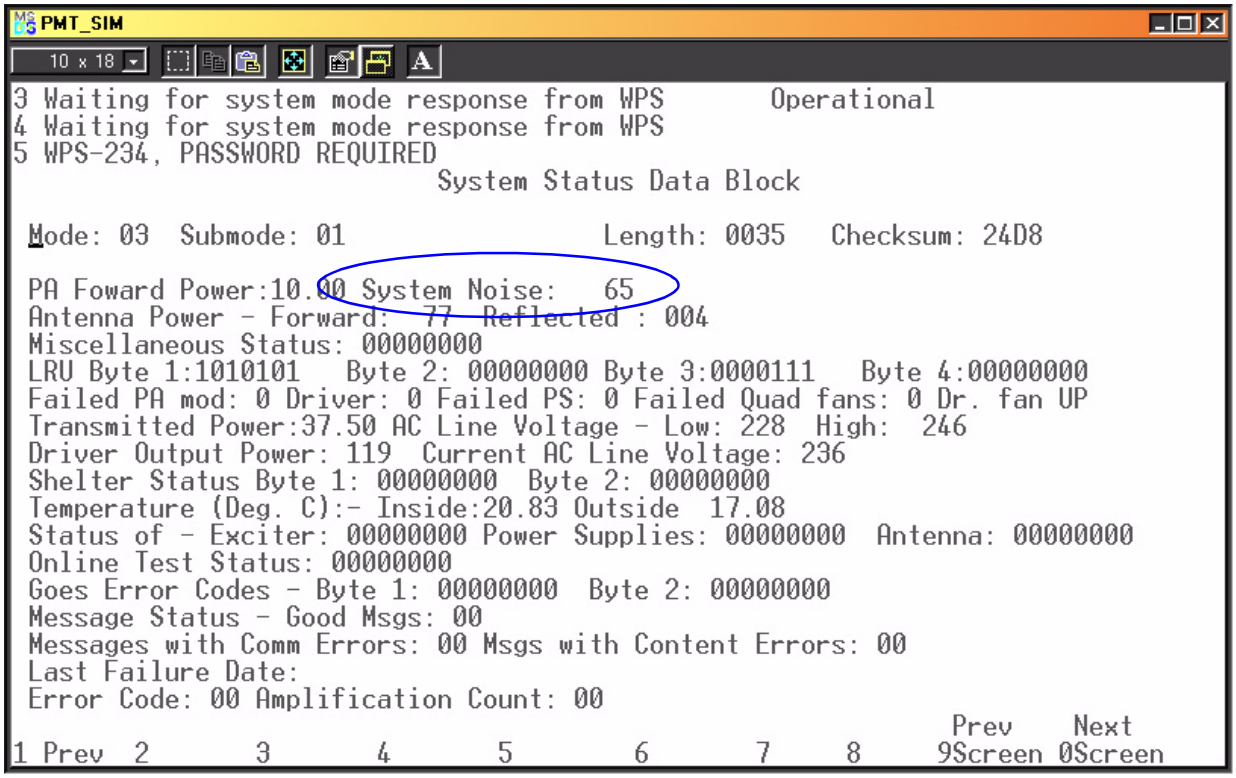

Figure 5-4 Profiler Maintenance Terminal Status Data Block Screen

7. Locate the *System Noise* field on the PMT screen, this number should be 63 ±1 with the Receiver Input (J1) terminated with a 50 ohm load. To assure repeatability of the System Noise value, let the radar cycle through the beams several times. Each time the East beam is reached, back out of the Status Data Menu by pressing F1 on the PMT. Select Status Data again and check the System Noise.

   If the system noise is approximately 063 ±1, no adjustment is required, proceed with the STC Alignment procedure described in Section 5.1.4. If the system noise value is too high or too low, proceed to Receiver Noise Adjustment in Section 5.1.3.

5.1.3 Type 2 Receiver Gain Adjustment.

The Receiver gain is changed by adjusting a potentiometer (pot) that is accessed by inserting the alignment tool through a port-screw (labeled ***IF GAIN***) on the top panel of the Receiver. The pot is a surface mount device and is very small (the screw on the pot

is about the size of a pinhead). A special alignment tool is provided with the Type 2 Receiver specifically for adjusting these pots and should always be kept at the site.

***** WARNING *****

Considerable care must be taken when making adjustments to the ***IF GAIN*** pot because it is delicate and extremely sensitive, rotations of just a few degrees will cause significant changes to the Receiver's gain.

1. Remove the blank panel located above the Receiver front panel from the front of the BSU Cabinet. (This will allow easier access to the gain adjustment pot.)

2. Carefully insert the alignment tool through the hole drilled in the center of the port-screw labeled IF GAIN on top of the Receiver, as shown in Figure 5-5. The pot may not be visible, so rely on the "feel" to seat the alignment tool on the potentiometer screw head.

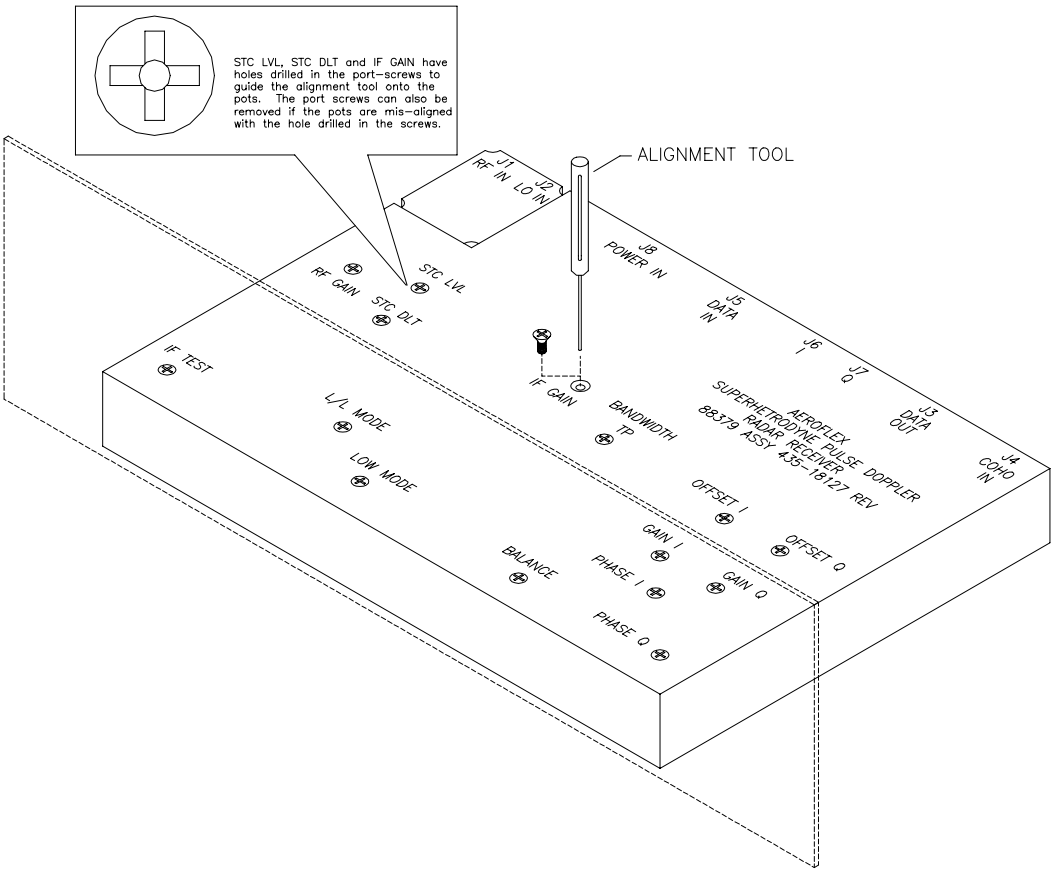

Figure 5-5 Type 2 Receiver Gain Adjustment

3. Adjusting the Receiver gain is a trial and error process. Make a small change to the IF GAIN pot, wait for the radar to cycle to the East beam, and use the PMT to verify the System Noise as described in Section 5.1.2. Repeat this process until the System Noise value of 063 ±1 is obtained. Once this value is reached, verify consistency of the System Noise value by checking several more continuous Beam cycles.

4. If required, replace the IF GAIN port-screw on the Receiver top panel.

5. Remove the 50 ohm load from RF INPUT (J1) on the rear panel of the Receiver, and connect the coaxial cable between J1 and the T/R Switch.

6. Contact the PCC at (303) 497-6033, and technicians will evaluate the data received from the profiler to determine if the factory STC settings will require adjustment.

5.1.4 Type 2 Receiver STC Alignment Procedure

The Sensitivity Time Control (STC) circuit is used to attenuate strong atmospheric signal returns that can saturate the Receiver in the three lowest range gates of the low modes. Receiver saturations cause a bias in the true atmospheric signals, and thus bias the wind measurements produced by the profiler.

The STC Alignment procedure requires an oscilloscope to monitor the waveform present at the In-phase (J6) or Quadrature (J7) output on the rear panel of the Type 2 Receiver. Triggering for the oscilloscope is obtained from one of two T/R Switch's gating pulses. The alignment procedure is performed when the radar is cycling normally in Operational mode during any of the three *Low* modes.

Test Equipment Setup

1. Power down the profiler using the standard power-down sequence described in Section 2.3.

2. Remove the four mounting screws from the front panel of the Signal Processor and pull the unit to its full out position. Remove the top cover panel from the Signal Processor.

3. Connect an oscilloscope-probe to Channel One of the oscilloscope. Unscrew the grabber-tip from the probe to expose the pointed tip. Insert the scope probe into pin 2 of connector J3 in the rear panel from inside the Signal Processor chassis, as shown in Figure 5-6.

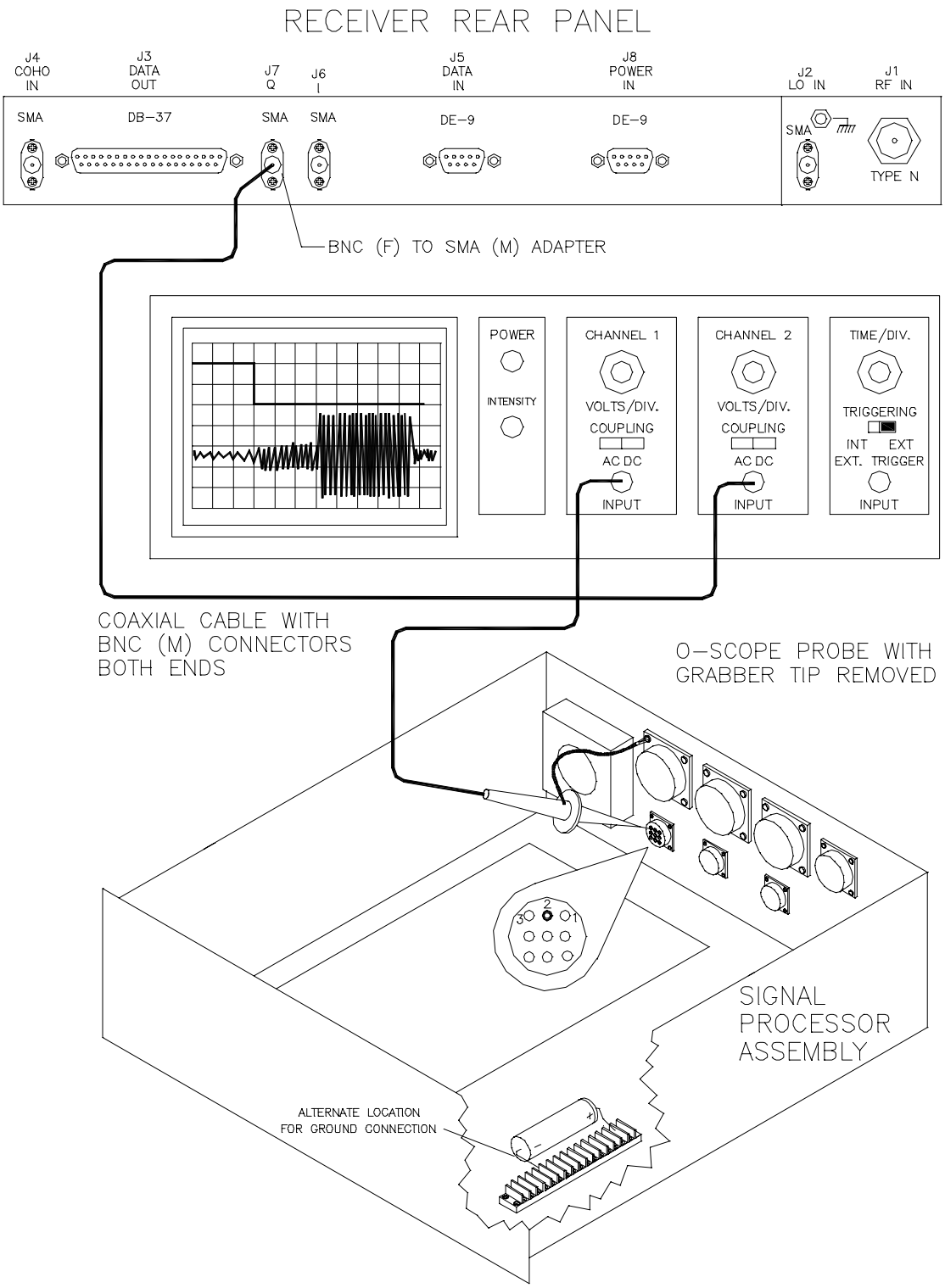

Figure 5-6 Receiver STC Alignment Test Equipment Setup

4. Screw an SMA (M) to BNC (F) adaptor onto connector J6 or J7 on the rear panel of the Type 2 Receiver. Connect a coax cable (with BNC connectors on both ends of cable) between Channel Two of the oscilloscope and the I (J6) or Q (J7) output on the rear panel of the Receiver as shown in Figure 5-6.

5. Oscilloscope Settings:

Time/Division:	5 uSec
Triggering:	Triggering on channel one - positive edge
Channel One:	Volts/Division = 2 (0.2 for x10 probe)
Channel Two:	Volts/Division = 200 mV

6. Terminate the RF INPUT (J1) on the Receiver rear panel with a 50 ohm load.

Procedure

1. Power up the Profiler using the sequence described in Section 2.4 and wait for the system to begin cycling normally.

2. With the Receiver's input (J1) terminated with a 50 ohm load, the oscilloscope will display waveforms similar to those shown in Figure 5-7. If the waveforms on the oscilloscope do not resemble those in Figure 5-7 and Figure 5-8, verify that the oscilloscope is triggering on pin 2 of connector J3 in the Signal Processor. The J3 connector may be rotated, and pin 2 may not be on top of the connector as it is shown in Figure 5-6.

   Figure 5-7 shows the entire T/R pulse referenced to the Receiver's video signal waveform. The oscilloscope is displaying the waveforms using a storage mode (trace over-writing) to enhance the characteristics of the video signal. The STC circuitry should be factory preset for ~8 microseconds delay (measured from the falling edge of trace 1) and 15 dB (~300 mV p-p) attenuation level. In reality, these settings must be fine-tuned on a site-by-site basis to achieve the maximum benefit from the STC circuitry.

3. Change the oscilloscope settings to 2 uSec/Division, and trigger on the falling edge of trace 1 (this will provide greater resolution on the oscilloscope screen). Figure 5-8 shows the falling edge of the T/R Switch gating signal (top trace) and the effect of the STC circuit on the video waveform (bottom trace). The STC is triggered off the falling edge of the gating signal and clamps the amplitude of the video signal several microseconds. The duration of the clamp is set by adjusting the *STC DLT* pot. The amplitude of the clamp is set by adjusting the *STC LVL* pot.

4. Contact the PCC to obtain the value required for the STC DLT duration setting.

Figure 5-7 STC Waveforms During the Low Mode, Rising Edge Trigger.

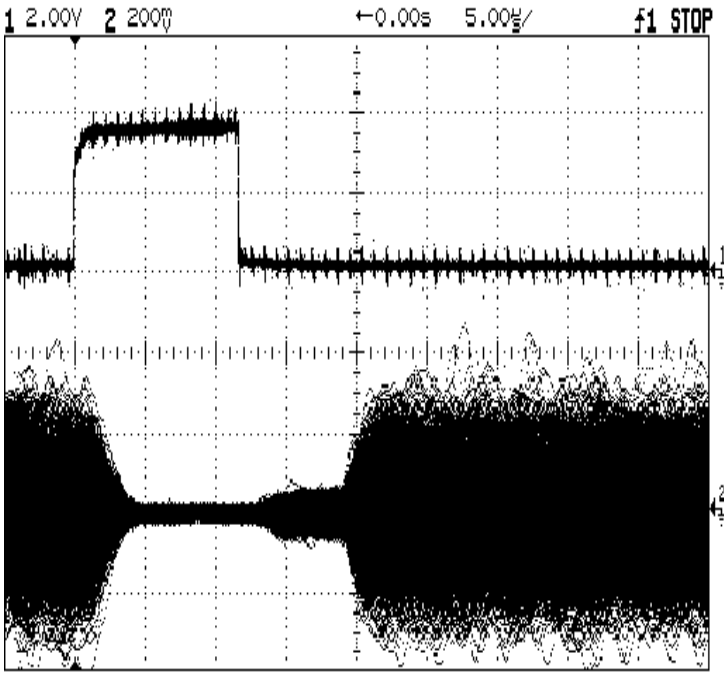

The top pulse in Figure 5-7 is the gating signal for the T/R Switch. The o-scope time/div is set at 5us to show the entire pulse. During the time when the signal is high, the T/R Switch blanks the receiver input. The bottom waveform shown is the video output of the Receiver (J7 or J8). The STC region starts at the falling edge of the T/R Pulse and extends out ~8us. The end of the STC region is where the video signal's amplitude jumps up.

Figure 5-8 STC Waveforms During the Low Mode, Falling Edge Trigger.

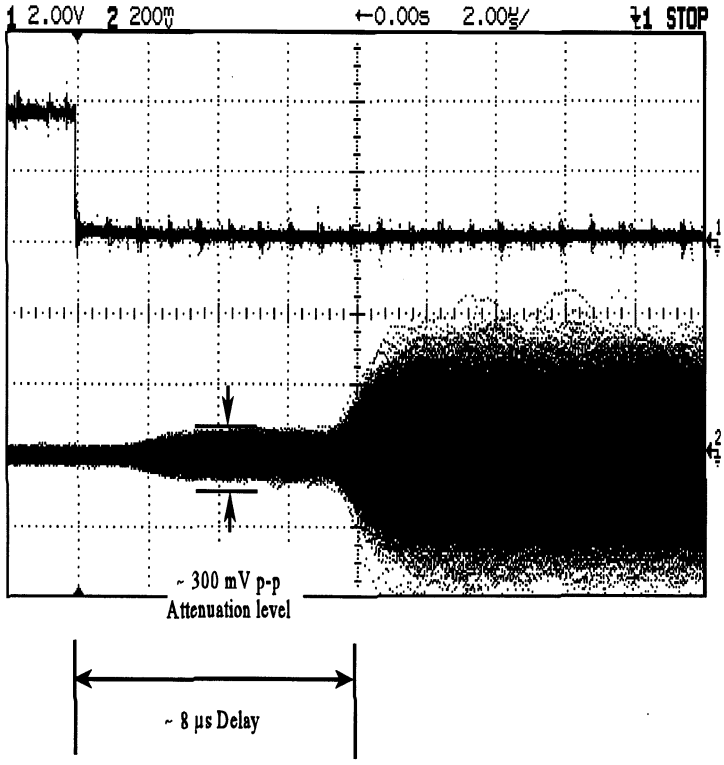

These are the same waveforms as shown in Figure 5-7, except, triggering is on the falling edge of the T/R pulse, and time/div is set at 2us to expand the STC region. Nominally, the duration of the STC region should be adjusted to ~8us, and the amplitude of the STC region is adjusted between 300-700 mV p-p. Every site is different, additional adjustment to the STC LVL is required to optimize the STC circuitry.

***** NOTE *****

The port-screws covering the *STC LVL* and *STC DLT* pots (should) have small holes drilled through the center of the screws. These holes (should) guide the alignment tool onto the pot. Considerable care must be taken when making adjustments to the *STC DLT* and *STC LVL* pots, they are extremely delicate. Do not attempt to adjust these pots without the special alignment tool and an oscilloscope.

***** NOTE *****

To adjust the STC Delay, carefully insert the alignment tool through the hole drilled in the port-screw of the *STC DLT* port on top of the Receiver (refer to Figure 5-5).

Rotate **CW** to Decrease the delay duration
Rotate **CCW** to Increase the delay duration

To adjust the STC Level, carefully insert the alignment tool through the hole drilled in the port-screw of the *STC LVL* port on top of the Receiver (refer to Figure 5-5).

Rotate **CW** to Increase the signal
Rotate **CCW** to Decrease the signal

5. Adjust the *STC DLT* pot on the top of the Receiver, observe the video signal on the oscilloscope. The length of the delay should vary with changes of the pot. Adjust the STC duration to ~ 8 uSec. This step will verify that the test equipment is connected correctly, and that turning the *STC DLT* pot will in fact change the STC delay settings.

6. Remove the 50 ohm load from the *RF INPUT* (J1) on the Receiver rear panel and connect the coaxial cable between the T/R Switch and J1 on the Receiver.

7. Contact the PCC at (303) 497-6033 and work with the support technicians to fine-tune the *STC LVL* and *STC DLT* settings. Fine-tuning the STC can be a time-consuming process, occasionally taking several hours of evaluation and adjustment to optimize the STC settings for a given site.

8. Once the STC alignment is completed, disconnect the test equipment from the radar, put the cover back on the Signal Processor, and slide the unit back into the rack.

9. Reinstall the blank panel above the Receiver front panel, and reinstall the BSU Cabinet side panel.

5.2 Limiter

The Limiter is located in the BSU Cabinet above the Receiver Assembly (see Figure 5-2). The Limiter is designed to protect the T/R Switch and Receiver Assembly from being damaged by excessive reflected power levels induced by antenna or BSU VSWR faults.

Replacement Procedure

1. Follow the standard power-down sequence described in Section 2.3.

2. Remove the side panel from the BSU Cabinet (see Figure 5-2).

3. Unscrew the type "N" connector between the T/R Switch and the Limiter, and disconnect the T/R Switch from the Limiter (see Figure 5-9).

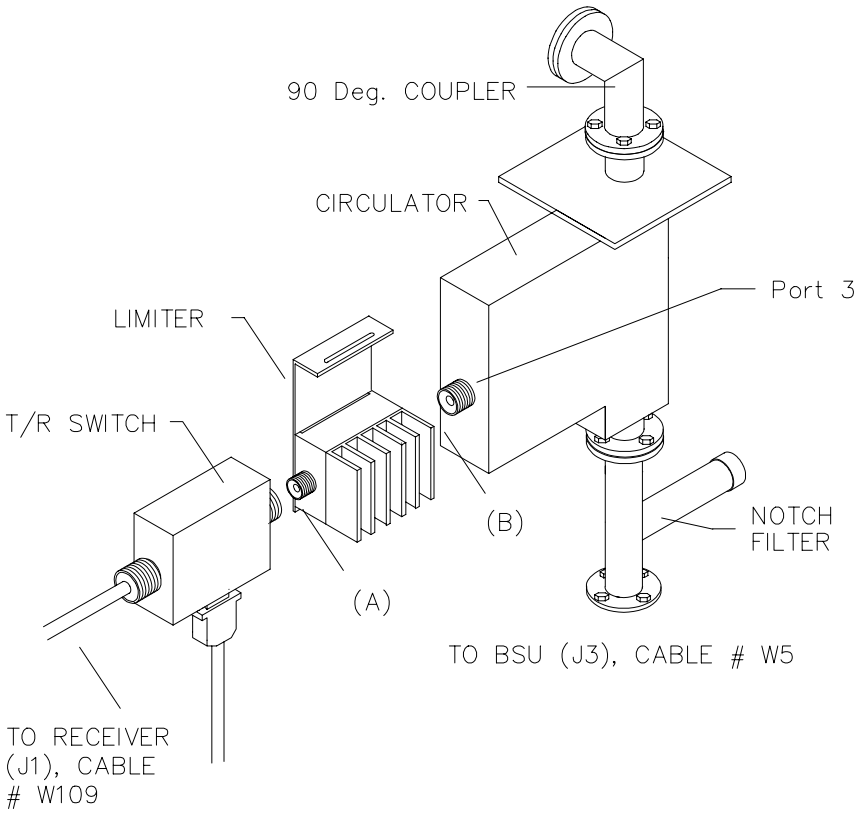

Figure 5-9 Limiter Replacement

4. Remove the bolts that fasten the Limiter mounting bracket to the BSU Cabinet top panel.

5. Unscrew the type "N" connector between the Limiter and the Circulator and remove the Limiter from the BSU Cabinet.

6. Connect Type N connector on the new Limiter to the Circulator.

7. Fasten the Limiter mounting bracket to BSU Cabinet top panel.

8. Connect the T/R Switch to the Limiter.

9. Reinstall the side panel on the BSU Cabinet.

10. Follow the standard power-up sequence described in Section 2.4.

5.3 Transmit/Receive Switch

The Transmit/Receive (T/R) switch is located in the BSU cabinet above the Receiver Assembly (see Figure 5-2). The T/R switch isolates the Receiver during the radar pulse transmission to protect the first stage of the Receiver Assembly from damage. As such, it functions with the Coaxial Circulator as a duplexer, allowing the profiler antenna to be used for both transmission and reception.

Transmit/Receive Switch Replacement Procedure

1. Follow the standard power-down sequence described in Section 2.3.

2. Remove the side panel from the BSU Cabinet (see Figure 5-2).

3. Using a small screwdriver, remove the retaining screws from the DE-9 connector on cable #W5 [point (A) in Figure 5-10] and remove the connector from the bottom of the T/R Switch.

4. Remove cable #W109 from the output of the T/R Switch [point (B) in Figure 5-10].

5. Loosen the type "N" connector that attaches the T/R Switch directly to the Limiter [point (C) in Figure 5-10] and remove the T/R Switch from the BSU Cabinet.

6. Install the new T/R Switch in the BSU Cabinet and tighten the type "N" connector between the T/R Switch and the Limiter.

7. Reconnect cable #W109 to the output of the T/R Switch and tighten the connector.

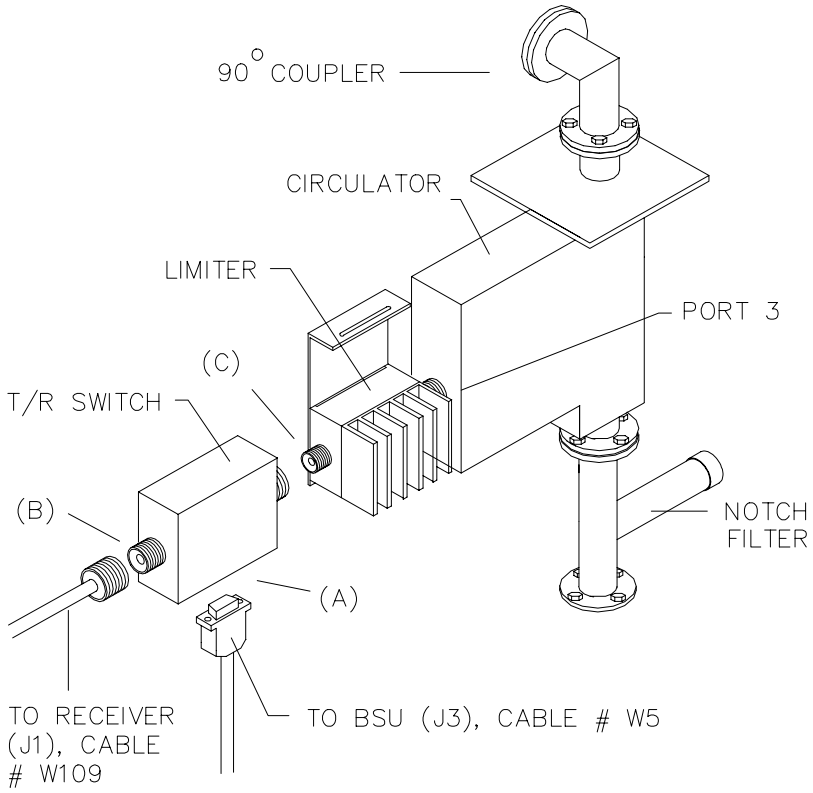

Figure 5-10 Transmit/Receive (T/R) Switch Replacement

8. Reconnect control cable #W5 to the bottom of the T/R Switch by re-attaching the DE-9 connector and fastening the retaining screws with a small screwdriver.

9. Replace the side panel on the BSU Cabinet.

10. Follow the standard power-up sequence described in Section 2.4.

5.4 Circulator

The Coaxial Circulator is bolted to the top of the BSU Cabinet and physically connected to the Directional Coupler Assembly (see Figure 5-2). The Circulator is a three-port, non-reciprocal device. It passes energy from the RF Power Amplifier (port 1) to the radar's coaxial co-linear antenna (port 2) with little attenuation while isolating the Receiver (at port 3). It also allows return signals from the antenna (port 2) to flow to the receiver (port 3) with little attenuation. Any residual power that appears at the first stage of the Receiver (port 3) is isolated by the actions of the Limiter and T/R Switch.

5.4.1 Circulator Replacement Procedure

1. Follow the standard power-down sequence described in Section 2.3.

2. Remove the side panel of the BSU Cabinet.

3. Remove the mounting screws that attach the Limiter mounting bracket to the top of the BSU Cabinet (see Figure 5-11).

4. Disconnect cable #W109 from port J1 on the rear panel of the Receiver and terminate J1 with a 50-ohm Load.

5. Disconnect the Limiter and T/R switch from port 3 of the Circulator [point (A) in Figure 5-11] by unscrewing the type "N" connector. Place the Limiter and T/R Switch on top of the Receiver.

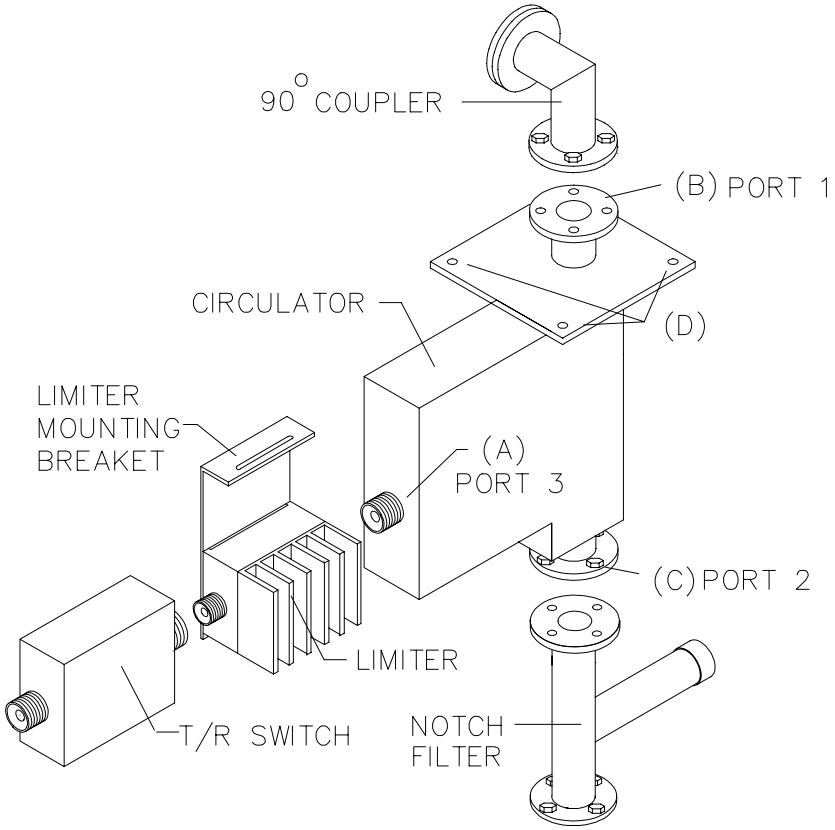

Figure 5-11 Circulator Replacement

6. Unplug the Inside Temperature Sensor (thermocouple) from its receptacle in the top of the BSU Cabinet (see Figure 2-4) and place it on the workbench.

7. Disconnect the thermocouple wires from the sensor receptacle and place them on top of the Receiver.

8. Remove the four bolts that fasten the top of the Circulator to the 90^0 Coupler [point (B) in Figure 5-11].

9. Remove the screws holding the top panel of the BSU Cabinet (see Figure 5-2).

10. Remove the bolts connecting the Circulator to the Directional Coupler [point (C) in Figure 5-11].

11. Grasp the Circulator firmly with both hands, lifting the Circulator and top panel of the BSU Cabinet straight up (as one assembly) to disconnect the Circulator from the Directional Coupler. Remove the assembly from the BSU Cabinet and place it on the floor of the shelter. Use care not to drop or jar the unit as the Circulator is easily damaged.

12. Remove the four bolts holding the top of the Circulator to the top panel of the BSU Cabinet [point (D) in Figure 5-11] and remove the Circulator.

13. Attach the new Circulator to the top panel of the BSU Cabinet and fasten the mounting bolts.

14. Lift the Circulator/BSU top panel assembly and place it on top of the BSU Cabinet.

15. Reach into the BSU Cabinet from the side and grasp the Circulator firmly with both hands.

16. Align port 2 of the Circulator [point (C) of Figure 5-11] with the center conductor of the Directional Coupler, and lower the Circulator straight down so that the center conductor is inside the Circulator. Rotate the Circulator flange so that the hole in the flange aligns with the pin on the Directional Coupler flange.

17. Fasten the four bolts connecting the Circulator to the Directional Coupler [point (C) in Figure 5-11].

18. Replace the screws that fasten the top panel to the BSU Cabinet.

19. Reconnect the thermocouple wires to the sensor receptacle.

20. Plug the Inside Temperature Sensor into its receptacle at the top of the BSU Cabinet.

21. Replace the four bolts that fasten the top of the Circulator to the 90^0 Coupler.

22. Test the power levels at port 3 of the Circulator using the procedures described in Section 5.4.2.

23. Reconnect the T/R Switch and Limiter to port 3 of the Circulator and tighten the type "N" connector [point (A) in Figure 5-11].

24. Remove the 50-ohm Load terminating port J1 and reconnect cable #W109.

25. Replace the side panel of the BSU Cabinet.

26. Follow the standard power-up sequence described in Section 2.4.

5.4.2 Circulator Port 3 Power Levels Test Procedure

The Circulator port 3 power level test measures the performance of the Circulator. This test is performed when any component in the BSU Cabinet is replaced or suspected of being faulty.

Test equipment required for this procedure is as follows:

- HP8900D Peak Power Meter
- HP84811A Peak Power Sensor
- HP8401A 10-dB Attenuator
- 100 MHZ Oscilloscope
- Two RG-8 coaxial cables with male type "N" connectors
- Pasternak Model PE7021 40-dB Attenuator, 100-watt (average power)
- Two RG-58 coaxial cables with male BNC connectors

The test equipment setup for this procedure is illustrated in Figure 5-12.

1. Follow the standard power-down sequence described in Section 2.3.

2. Remove the side panel of the BSU Cabinet (see Figure 5-2).

3. Disconnect cable #W109 from port J1 on the rear panel of the Receiver and terminate port J1 with a 50-ohm Load.

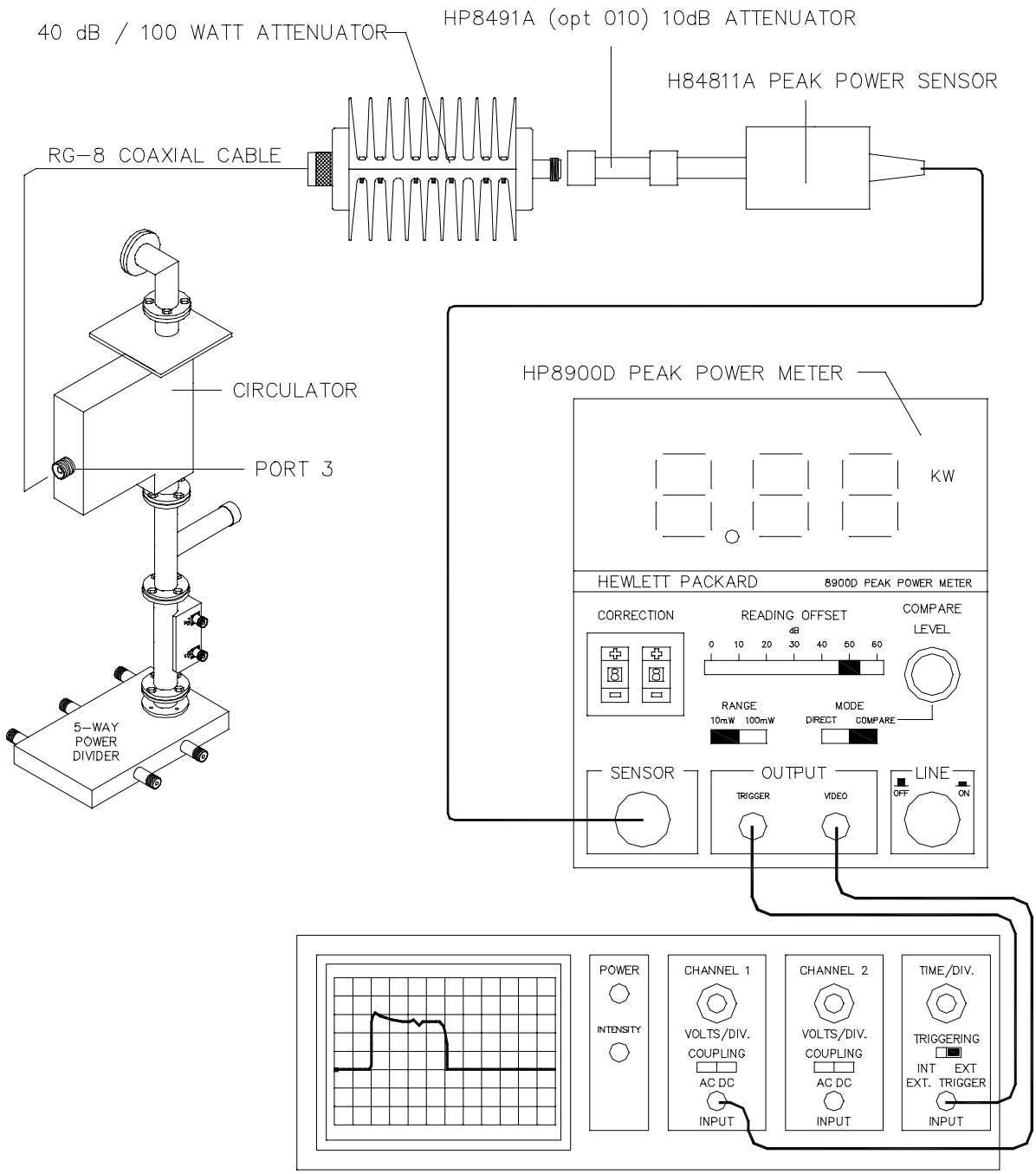

Figure 5-12 Circulator Port 3 Power Test Equipment Setup

4. Remove the mounting screws that attach the Limiter mounting bracket to the top of the BSU Cabinet (see Figure 5-11).

5. Disconnect the Limiter and T/R switch from port 3 of the Circulator [point (A) in Figure 5-11] by unscrewing the type "N" connector. Place the Limiter and T/R Switch on top of the Receiver.

6. Assemble the test equipment as illustrated in Figure 5-12. Connect one end of an RG-8 coaxial cable to port 3 of the Circulator, and connect the other end of the cable to the INPUT port of the 40-dB attenuator. Connect the 10-dB attenuator to the OUTPUT port of the 40-dB attenuator. Connect the HP84811A Peak Power Sensor to the 10-dB attenuator. Connect the Peak Power Sensor to the HP8900D Peak Power Meter. Connect the VIDEO OUTPUT of the HP8900D to Channel One of the oscilloscope with a BNC (M) to BNC (M) coaxial cable. Connect the TRIGGER OUTPUT of the HP8900D to the EXTERNAL TRIGGER INPUT of the oscilloscope with a BNC (M) to BNC (M) coaxial cable.

7. HP8900D Peak Power Meter settings:

READING OFFSET	50-dB
RANGE	10 mW, 100 mW if over range occurs
MODE	COMPARE
CORRECTION FACTOR	As marked on the 84811A Peak Power Sensor for range nearest to 400 MHz

8. Oscilloscope Settings:

VOLTS/DIVISION	5 mV/Div
TIME/DIVISION	5 uSec/Div
TRIGGER SOURCE	EXTERNAL - RISING EDGE

9. Follow the standard power-up sequence described in Section 2.4.

10. Permit the radar to enter its normal *Operational* cycle.

11. Observe the waveforms on the oscilloscope screen. Adjust the COMPARE knob on the HP8900D so the DC level of the C*ompare Trace* on the scope is positioned at the top of the transmitted pulse, averaging through any ripples. (The waveform will be similar to those shown in Figure 5-17 and Figure 5-18.)

12. Record the readings of the Peak Power Meter in each beam and mode. If the measured peak power is less than 350 Watts in all beams and modes, the Circulator is functioning properly.

> ***** NOTE *****
>
> If any of the readings are out of specification, check the test equipment setup and repeat the measurements if the setup is found to be in error. If the setup is correct, contact the PCC for assistance.

13. Reconnect the Limiter and T/R switch to port 3 of the Circulator.

14. Replace the mounting screws that attach the Limiter mounting bracket to the top of the BSU Cabinet.

15. Remove the 50-ohm Load from port J1 on the rear panel of the Receiver and reconnect cable #W109 at this point.

16. Replace the side panel of the BSU Cabinet.

17. Follow the standard power-up sequence described in Section 2.4.

5.5 Directional Coupler

The Directional Coupler is a passive device connected between the Notch Filter and the 5-Way Power Divider as illustrated in Figure 5-2. This component has two ports that allow antenna forward and reflected power measurements to be made. The Forward and Reflected Power ports of the Directional Coupler have internal 50 dB attenuation factors.

Directional Coupler Replacement Procedure

1. Follow the standard power-down sequence described in Section 2.3.

2. Remove the side panel from the BSU Cabinet (see Figure 5-2).

3. Unscrew the type "N" connectors from the forward and reflected power ports on the Directional Coupler [points (A) & (B) in Figure 5-13] and disconnect the 3-dB pads.

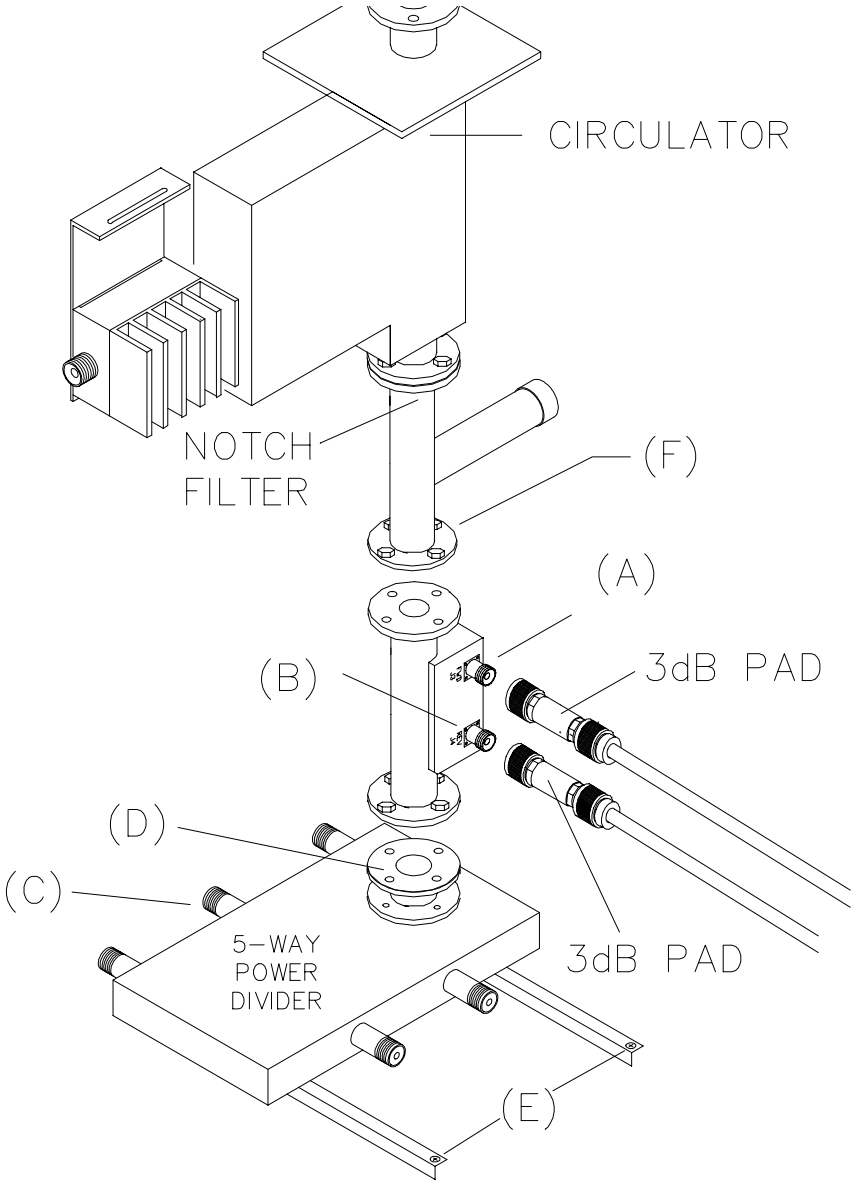

Figure 5-13 Directional Coupler Replacement

4. Disconnect the five Power Feed Cables from the 5-Way Power Divider [point (C) in Figure 5-13].

5. Remove the four bolts that fasten the Directional Coupler to the 5-Way Power Divider [point (D) in Figure 5-13].

6. Remove the four bolts that attach the 5-Way Power Divider support rails to the BSU Cabinet rails [point (E) Figure 5-13]. Support the 5-Way Power Divider from

below and disconnect the 5-Way Power Divider from the Dual Directional Coupler. Remove the 5-Way Power Divider from the BSU Cabinet.

7. Remove the four mounting bolts attaching the Directional Coupler to the Notch Filter [point (F) Figure 5-13].

8. Pull down on the Directional Coupler, separating it from the Notch Filter. Remove the Directional Coupler Assembly from the BSU Cabinet.

9. Remove the center conductor pin assembly from the defective Directional Coupler and install in the new Directional Coupler

10. Attach the replacement Directional Coupler to the Notch Filter and verify that the center conductor and nylon spacer are properly seated in the flange [point (F) of Figure 5-13]. Install and tighten the four flange mounting bolts [point (F) Figure 5-13].

11. Attach the 5-way Power Divider to the Directional Coupler, verify that the center conductor and nylon spacer are properly seated in the flange [point (D) of Figure 5-13]. Install and tighten the four flange mounting bolts.

12. Attach the 5-Way Power Divider support rails to the BSU rack rails [point (E) Figure 5-13].

13. Connect the five Power Feed Cables to the 5-Way Power Divider [point (C) in Figure 5-13]. **Make sure the Power Feed Cables are re-connected to the same ports of the 5-Way Power Divider that they were removed from!**

14. Perform the Circulator Port 3 Power Levels Test Procedure described in Section 5.4.2.

15. Reconnect the 3-dB pads to the forward and reflected power ports of the Directional Coupler and fasten their type "N" connectors.

16. Replace the side panel of the BSU Cabinet.

17. Follow the standard power-up sequence described in Section 2.4.

5.6 5-Way Power Divider

The 5-Way Power Divider splits the RF power from the transmitter into five equal parts and sends each portion to a BSU Switch in the BSU Switch Assembly. Figure 5-2 identifies the location of the 5-Way Power Divider in the BSU Cabinet.

1. Follow the standard power-down sequence described in Section 2.3.

2. Remove the side panel of the BSU Cabinet.

3. Disconnect the five Power Feed Cables from the 5-Way Power Divider [point (A) in Figure 5-14].

4. Remove the four bolts that fasten the Directional Coupler to the 5-Way Power Divider [point (B) in Figure 5-14].

5. Remove the four bolts that attach the 5-Way Power Divider support rails to the BSU Cabinet rails [point (C) Figure 5-14]. Support the 5-Way Power Divider from below and disconnect the 5-Way Power Divider from the Dual Directional Coupler. Remove the 5-Way Power Divider from the BSU Cabinet.

6. Remove the two support rails from the defective 5-Way Power Divider and attach the rails to the replacement 5-Way Power Divider.

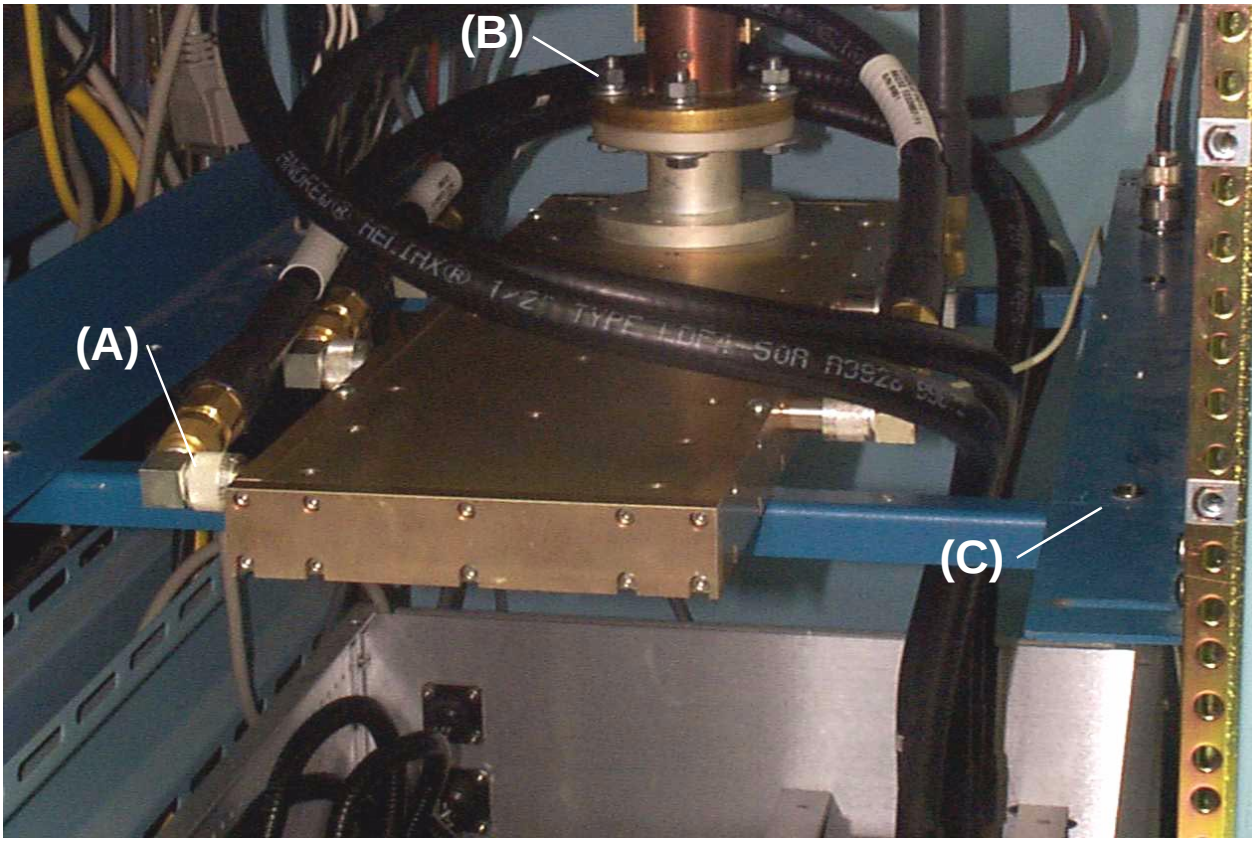

Figure 5-14 5-Way Power Divider Replacement

7. Insert the center conductor into the flange of the new 5-Way Power Divider.

8. Remove the o-ring gasket from the shaft of the old 5-Way Power Divider and place it on the new unit.

9. Attach the 5-way Power Divider to the Directional Coupler, verify that the center conductor and nylon spacer are properly seated in the flange [point (B) of Figure 5-14]. Install and tighten the four flange mounting bolts.

10. Attach the 5-Way Power Divider support rails to the BSU rack rails [point (C) Figure 5-14].

11. Connect the five Power Feed Cables to the 5-Way Power Divider [point (A) in Figure 5-14]. **Make sure the Power Feed Cables are re-connected to the same ports of the 5-Way Power Divider that they were removed from!**

12. Perform the Circulator port 3 power level test procedure described in Section 5.4.2.

13. Install the side panel of the BSU Cabinet.

14. Follow the standard power-on sequence described in Section 2.4.

5.7 Reflected Power Sensor

The Narda 481 Reflected Power Sensor; located inside the BSU Cabinet is mounted on a cross brace as illustrated in Figure 5-2. The sensor detects the reflected power from the antenna and transmits a proportional voltage to System Status Monitor. If the DC voltage transmitted to the SSM is out of range, the status monitor interprets this as a voltage standing wave ratio (VSWR) fault and shuts down the radar transmitter, places the radar in *Inoperative Mode*.

5.7.1 Reflected Power Sensor Replacement Procedure

1. Follow the standard power-down sequence described in Section 2.3.

2. Remove the side panel of the BSU Cabinet.

3. Unscrew and remove the type "N" connector from the top of the Reflected Power Sensor [point (A) in Figure 5-15].

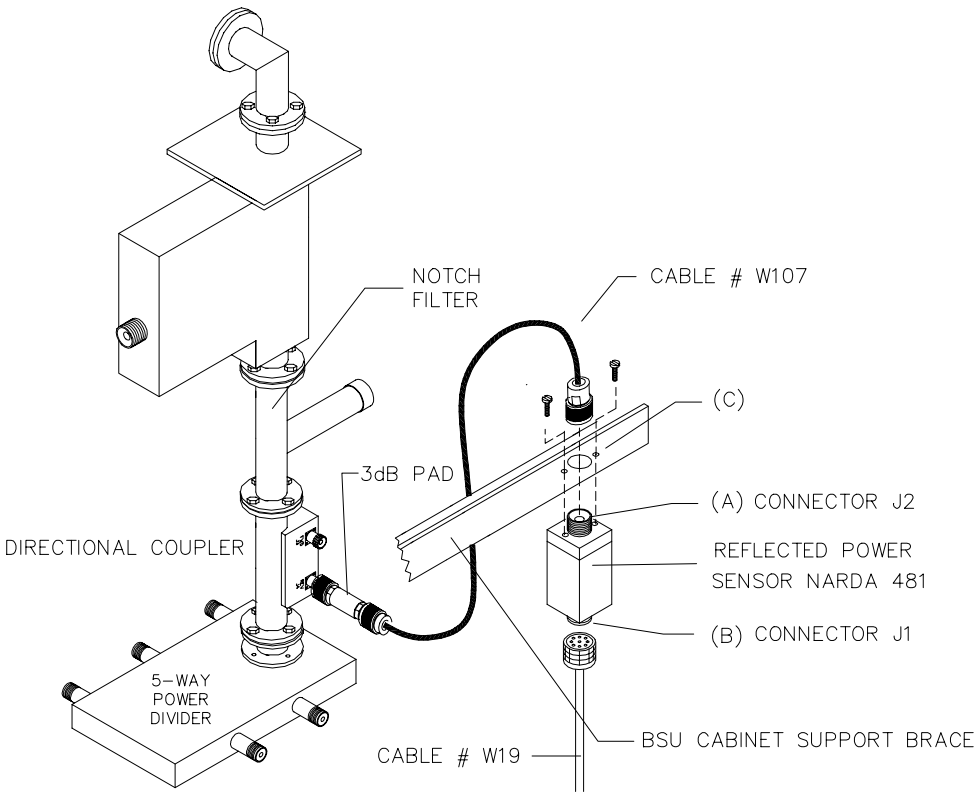

Figure 5-15 Reflected Peak Power Sensor Replacement

4. Unscrew and remove the interface cable connector from the bottom of the Reflected Power Sensor [point (B) in Figure 5-15].

5. Remove the mounting screws and remove the sensor [point (C) in Figure 5-15].

6. Install the new Reflected Power Sensor and fasten it in place with the mounting screws.

7. Install the type "N" connector at the top of the sensor.

8. Install the interface cable connector on the bottom of the sensor.

5.7.2 Reflected Power Sensor Calibration Procedure

The Reflected Power Sensor must be calibrated after replacement. The steps required for calibration include zero-offset adjustment, test equipment setup, power measurement, sensor output calculation, and sensor output calibration. Test equipment required to perform these activities is as follows:

- HP8900D Peak Power Meter
- HP84811A Power Sensor
- Digital Volt Meter (DVM)

The Test equipment setup for this procedure is shown in Figure 5-16.

Reflected Power Sensor Zero Offset Adjustment

1. Disconnect the 3-dB pad and cable #W107 from the reflected power port on the Directional Coupler [point (A) in Figure 5-16].

2. Remove the four mounting screws from the front panel of the System Status Monitor (SSM) and pull the unit to its full-out position. Remove the top cover panel of the SSM.

3. Connect the DVM between test points TP8(+) and TP14(GND) of the Analog Interface Board (see Figure 5-19) inside the SSM chassis.

4. Turn on Breaker #22 to restore power to the Equipment Cabinet.

5. Adjust R24 on the SSM Analog Interface Board for 0 VDC (± 10mV).

6. Turn off Breaker #22 to remove power from the Equipment Cabinet.

Test Equipment Setup

***** CAUTION *****

Measurements and adjustments are made at full RF power. To avoid encountering HIGH POWER RF, care must be taken to disconnect the correct cables.

1. Connect HP84811A Power Sensor to the REV (reflected) power port of the Directional Coupler as illustrated in Figure 5-16.

2. Connect the output cable of the Power Sensor to the SENSOR input of the HP8900D Peak Power Meter [point (B) in Figure 5-16].

3. Note the correction factor for the 400-MHZ range on the Power Sensor and dial it into the CORRECTION switches on the front panel of the Peak Power Meter [point (C) in Figure 5-16].

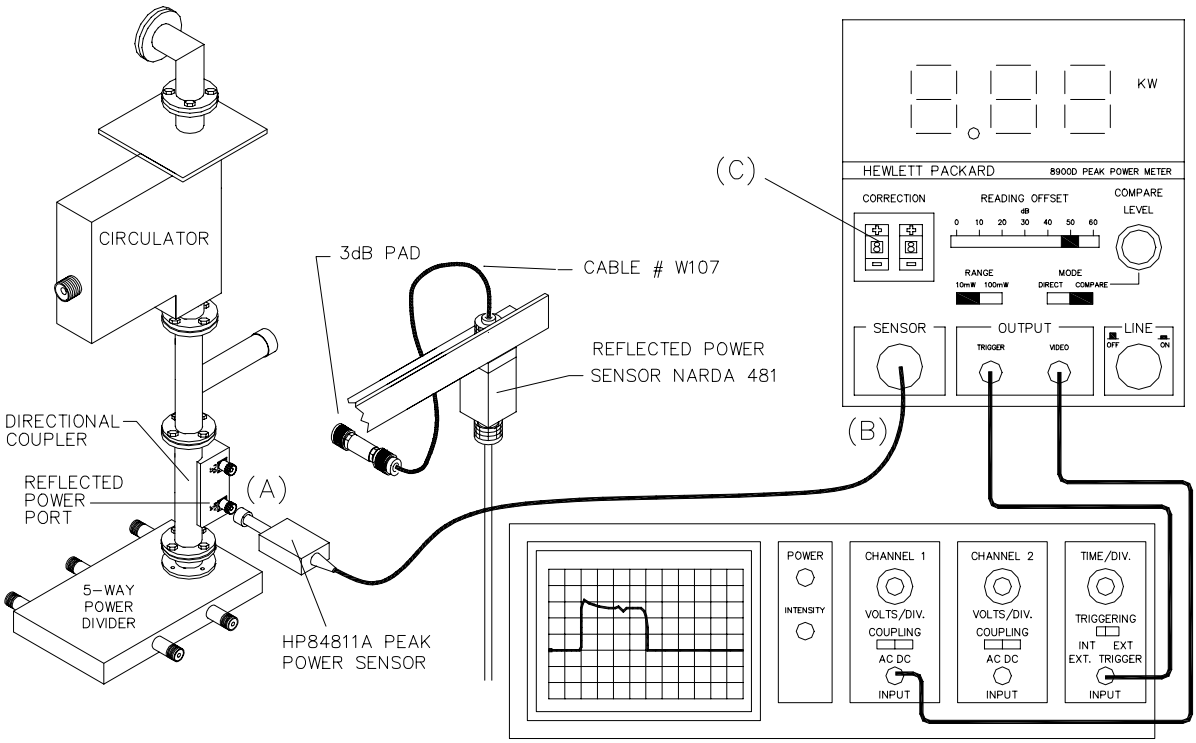

Figure 5-16 Reflected Power Measurement Test Equipment Setup

4. Set the *READING OFFSET* on the Peak Power Meter to "50-dB", set the *MODE* to "DIRECT", and set the *RANGE* to "10 mW". If an over range condition occurs during measurements, change the range to "100 mW".

5. Using the coaxial cables provided in the Peak Power Test Kit, connect the *Video* output of the HP8900D to *Channel 1* of the oscilloscope. Connect the *Trigger* output of the HP8900D to *External Trigger* Input of the oscilloscope.

6. Power up the system by following the standard power up sequence in Section 2.4.

Reflected Peak Power Measurement

The profiler spends two minutes in each of its three beams (east, north, and vertical): one minute in the high mode and then one minute in the low mode. All power measurements and adjustments must be made in the same beam and mode to ensure the consistency of the measurements.

Observe the front panel of the Beam Steering Unit to determine when the profiler is in a particular beam and mode. When the radar switches beams, one minute remains to make measurements or adjustments in high mode before it switches to low mode using the procedures described below. If measurements or adjustments cannot be made in the selected one minute period, wait until the next time the radar switches into the desired beam and mode.

1. Let the profiler transmit through one complete beam cycle (East High through Vertical Low). During this time observe the reading of the Peak Power Meter, and determine which beam and mode produces the highest measurable power level.

2. Switch the *RANGE* switch on the Peak Power Meter from *DIRECT* to *COMPARE* mode.

3. When the profiler is transmitting in the beam and mode that produced the highest measurable power, observe the waveforms on the oscilloscope. Rotate the *COMPARE LEVEL* knob on the HP8900D to position the *Compare Trace* at the top of the transmitted pulse waveform, averaging through any ripples. Figure 5-17 and Figure 5-18 are examples of transmitted pulses in the high and low modes respectively. The *Compare Traces* in these figures have been positioned correctly. Record the peak power value displayed on the HP8900D (referenced below as $P_{measured}$).

Figure 5-17 20 us Peak Power Pulse in High Mode

Waveform displayed on an oscilloscope when used in conjunction with an HP8900D peak power meter. The vertical position of the **Compare Trace** is varied by rotating the *Compare* knob on the HP8900D.

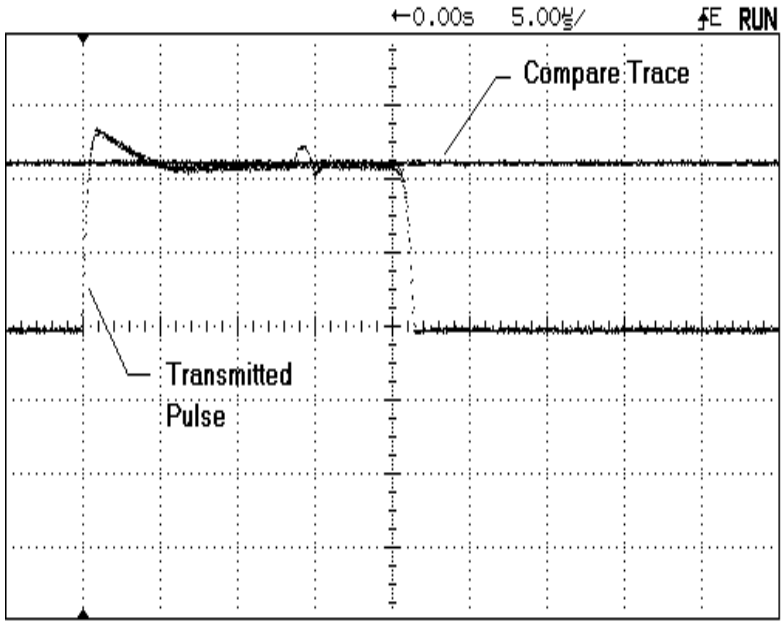

Figure 5-18 3.33 us Peak Power Pulse in Low Mode

Waveform displayed on an oscilloscope when used in conjunction with an HP8900D peak power meter. The vertical position of the **Compare Trace** is varied by rotating the *Compare* knob on the HP8900D.

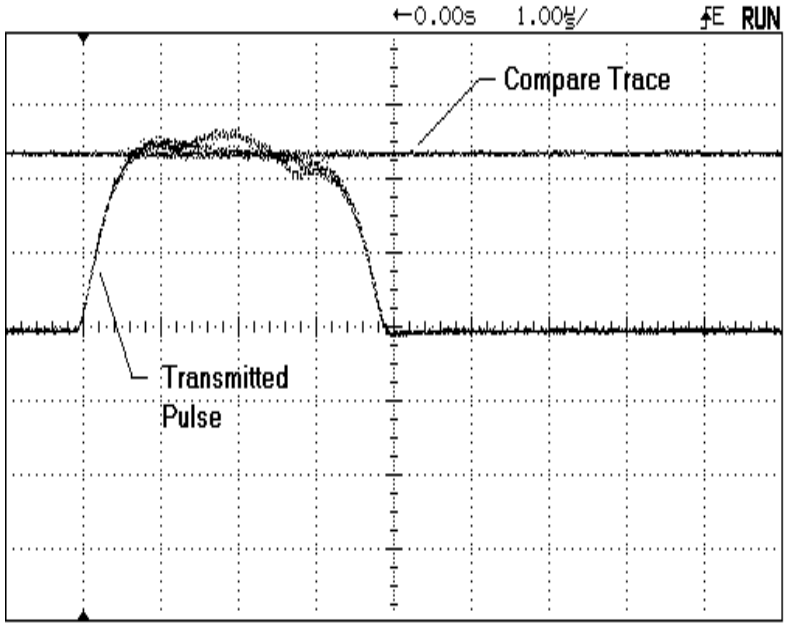

Reflected Power Sensor Output Calculation

Calculate the Reflected Power Sensor output voltage at a given power level using Equation (5-1) and record the result for later use in the calibration of the sensor.

$$V_{out} = (P_{measured} * 10) / 4 \qquad (5\text{-}1)$$

where: V_{out} =Reflected Power Sensor output voltage measured between TP8(+) and TP14(-) of the SSM Analog Interface Board.

$P_{measured}$ =Reflected Power Reading Using the HP8900D

Example : Calculate V_{out} when $P_{measured}$ = 0.191 KW.
(0.191 * 10) / 4 = 0.4775 VDC.

Reflected Power Sensor Calibration

1. Remove the test equipment and reconnect the Reflected Power Sensor to the reflected power port on the Directional Coupler.

2. Connect the DVM between test points TP8(+) and TP14(GND) on the SSM Analog Interface Board (see Figure 5-19).

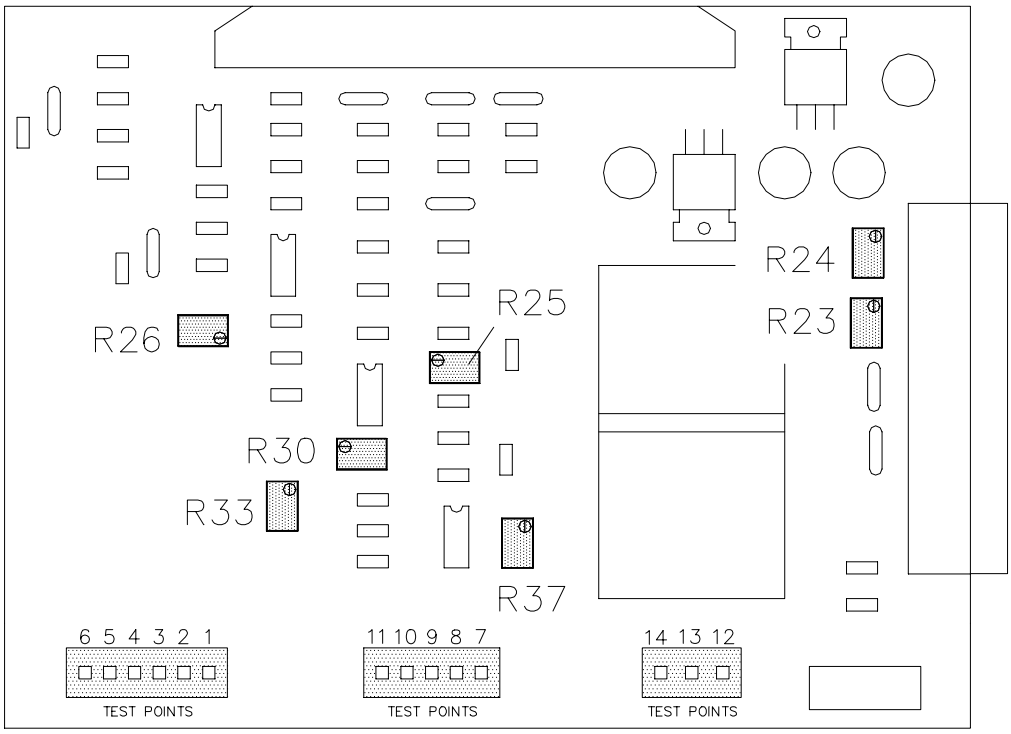

Figure 5-19 System Status Monitor Analog Interface Board

3. With the profiler in O*perational* mode, and transmitting in the same direction and mode used to calculate the Reflected Power Sensor output, adjust the calibration potentiometer on the Reflected Power Sensor to produce a DC voltage corresponding to the result obtained using Equation (5-1).

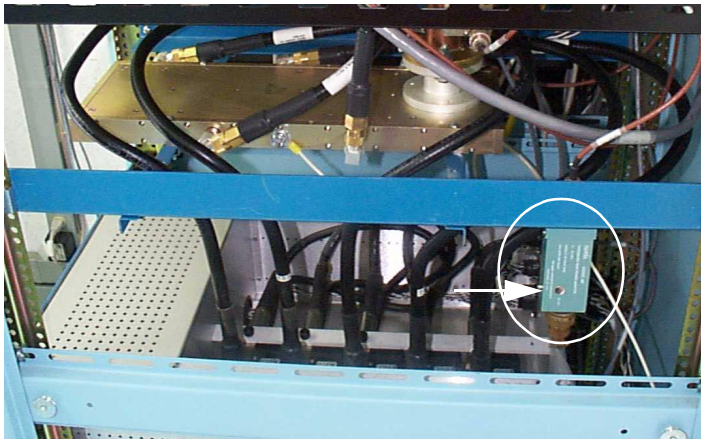

Figure 5-20 Reflected Power Sensor Calibration Adjustment Pot

4. The Reflected Power Sensor calibration potentiometer is exposed by removing the metallic plug from the side of the sensor housing (see Figure 5-20). Use a small flat-blade screwdriver to make the adjustment.

Completion Activities

1. Replace the plug on the side of the Reflected Power Sensor.

2. Replace the side panel of the BSU Cabinet.

3. Replace the top cover of the SSM.

4. Push the SSM back into the Equipment Cabinet and replace the mounting screws on the front panel.

5. Contact the Profiler Control Center to verify that the Reflected Power Sensor calibration and replacement have been successfully accomplished.

5.8 Type 3 449 MHz Beam Steering Unit (BSU) Switch Assembly

The BSU Switch Assembly routes RF energy to one-of-two Co-Axial Co-Linear (COCO) antenna arrays. The two antenna arrays are orthogonal to one another. The upper COCO antenna array comprises the East Beam. The lower COCO antenna array comprises both the North and Vertical Beams. The oblique beams (east and north) propagate RF energy into the atmosphere at an angle of 73.7 degrees above the horizon. The angle of propagation is determined by the length-ratio of the five Power Feed Cables (see Figure 5-21). The BSU Switch Assembly contains five Phase Shift Cables. The lengths of the Phase Shift Cables are complimentary to the lengths of the Power Feed Cables. During the Vertical Beam, the BSU routes RF energy through the Phase Shift Cables, effectively making the lengths of the all five Power Feed Cables equal. Consequently, during the vertical beam, the antenna radiates directly vertical.

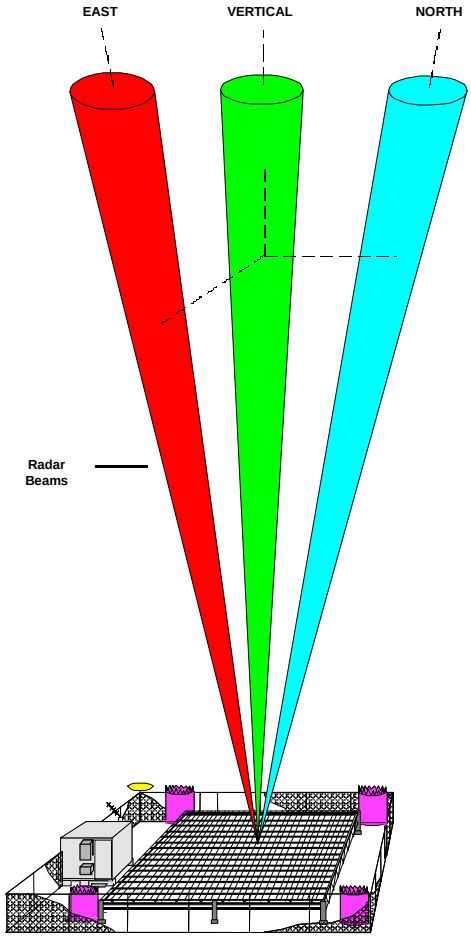

Figure 5-2 identifies the location of the BSU Switch Assembly in the BSU Cabinet. Figure 5-22 shows the BSU front panel *BEAM DIRECTION* indicators and switch *FAULT LOCATION* indicators. Figure 5-23 illustrates the internal component layout of the BSU Switch Assembly.

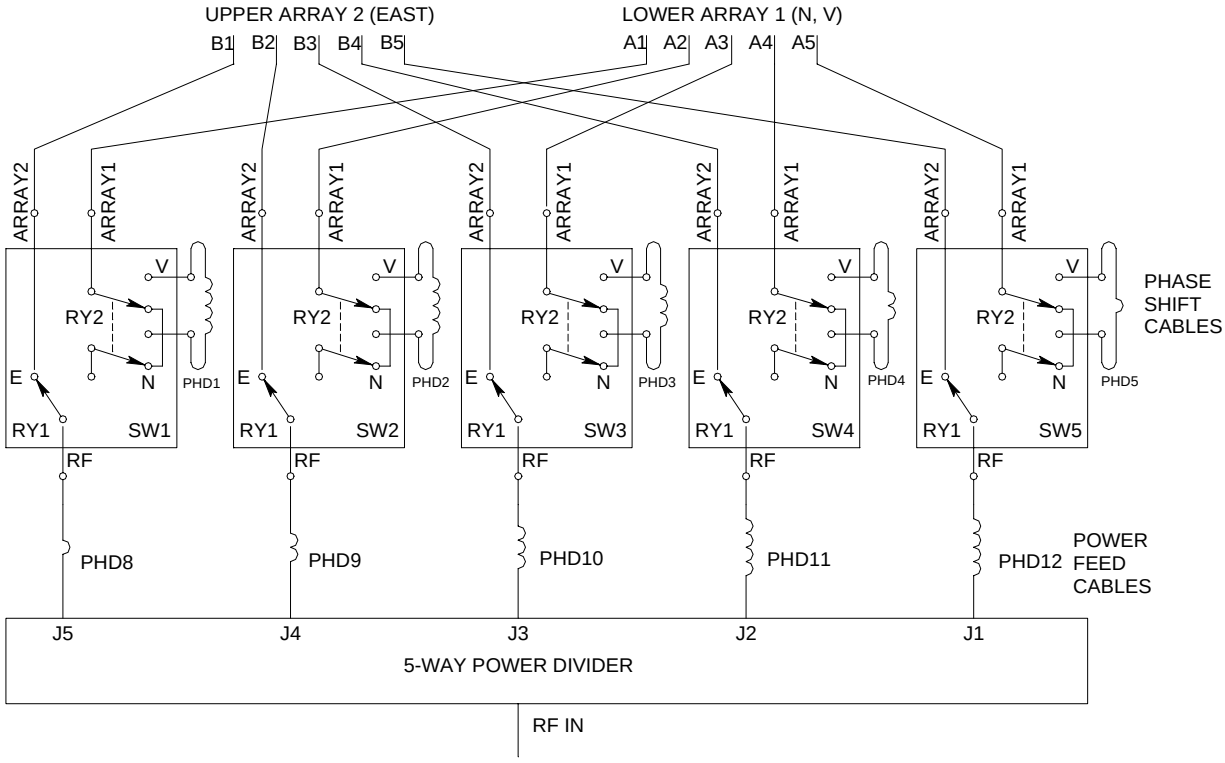

Figure 5-21 Beam Steering Network Diagram

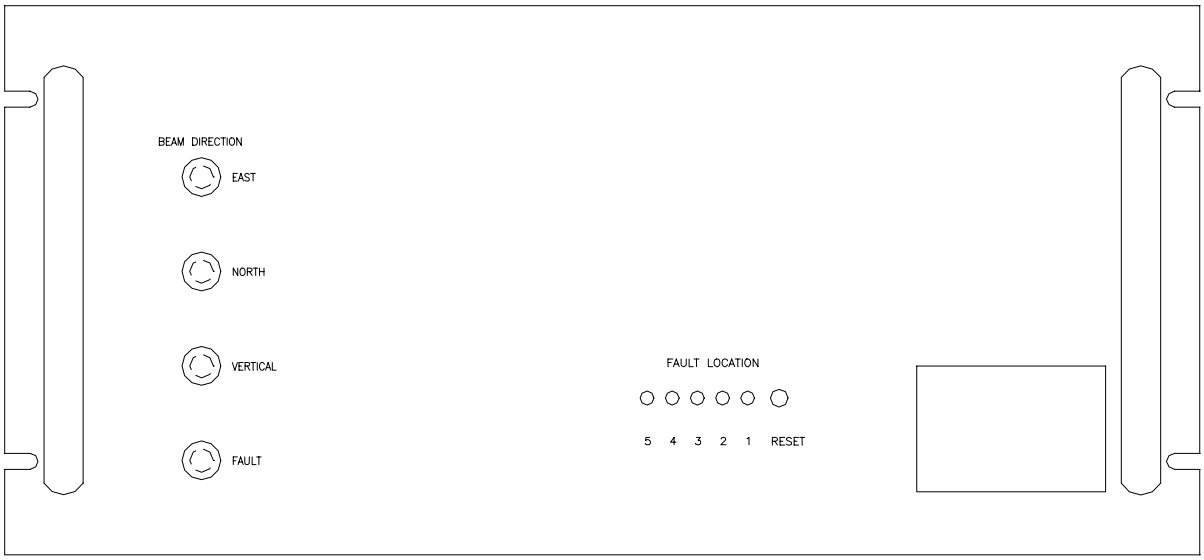

Figure 5-22 Type 3 BSU Switch Assembly Front Panel

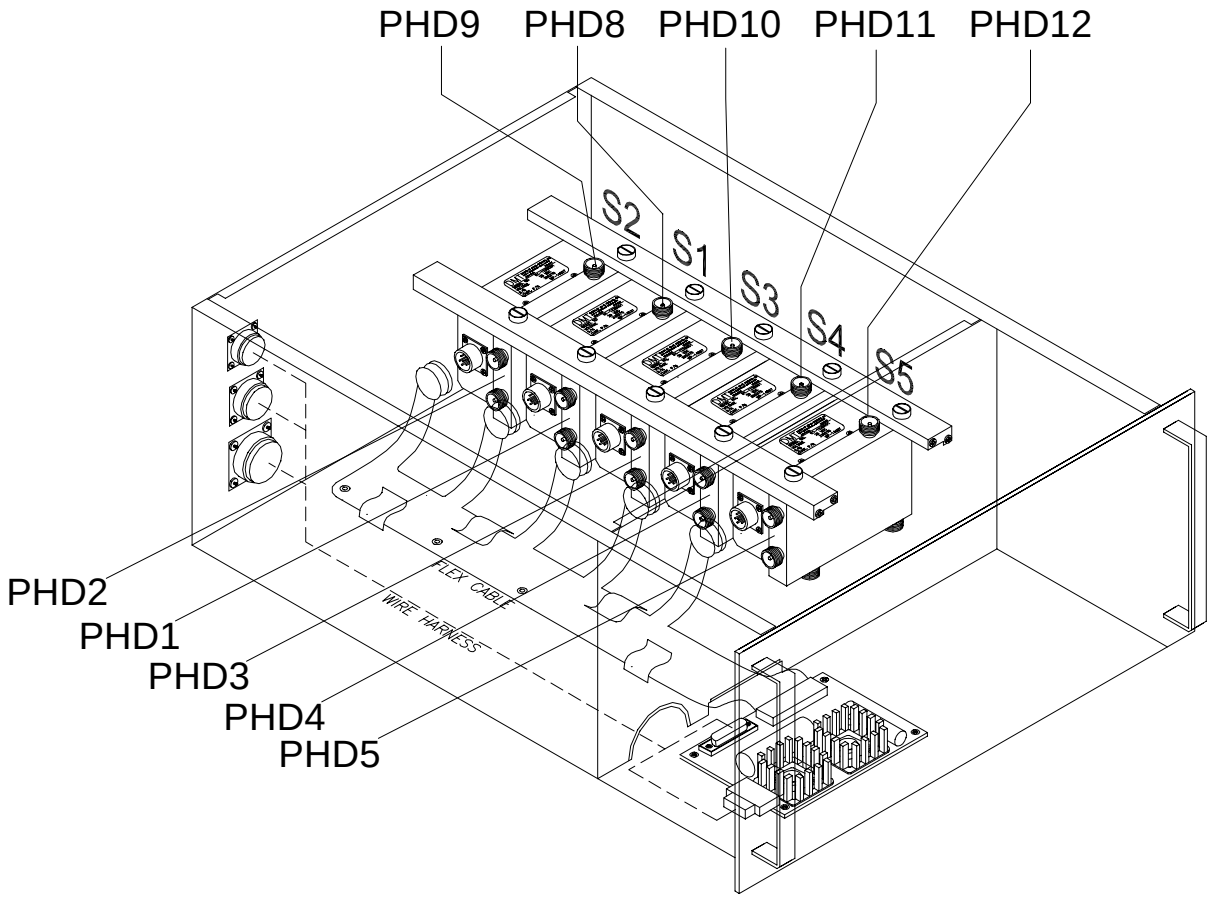

Figure 5-23 Type 3 BSU Switch Assembly Internal Component Layout

5.8.1 Coaxial Switch Assemblies

The BSU Switch Assembly contains five identical coaxial switches that control routing RF energy to the east and north/vertical antenna arrays (see Figure 5-24). Internally, the coaxial switch assembly is comprised of two sets of relays actuated by two +28 VDC solenoids. Solenoid operation is monitored using optical sensors that detect actuation failures. Figure 5-24 shows the physical configuration of a coaxial switch and its schematic diagram. Figure 5-25 depicts the route of RF energy through the switch in the three beam positions.

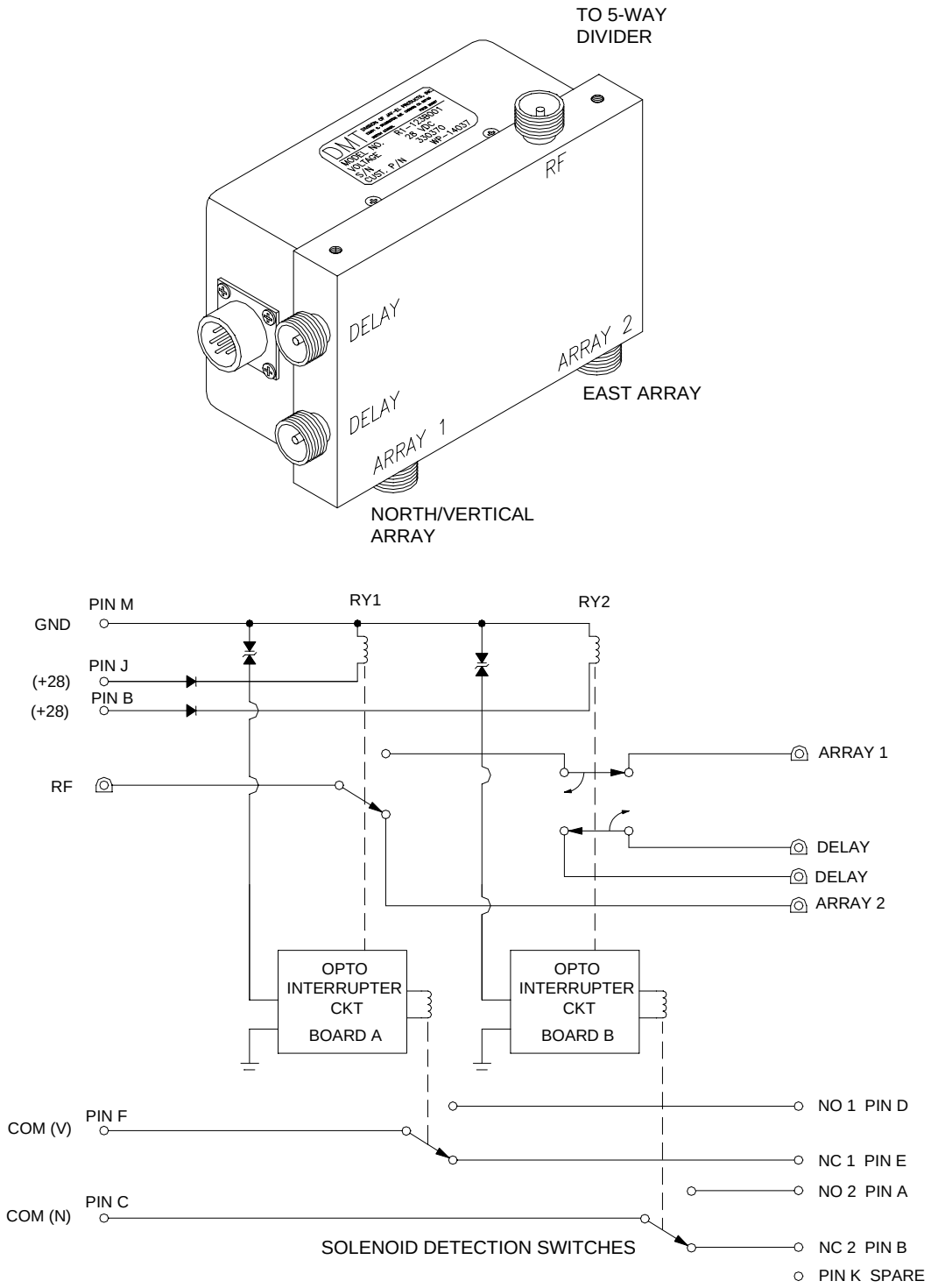

Figure 5-24 BSU Coaxial Switch Assembly Schematic Diagram

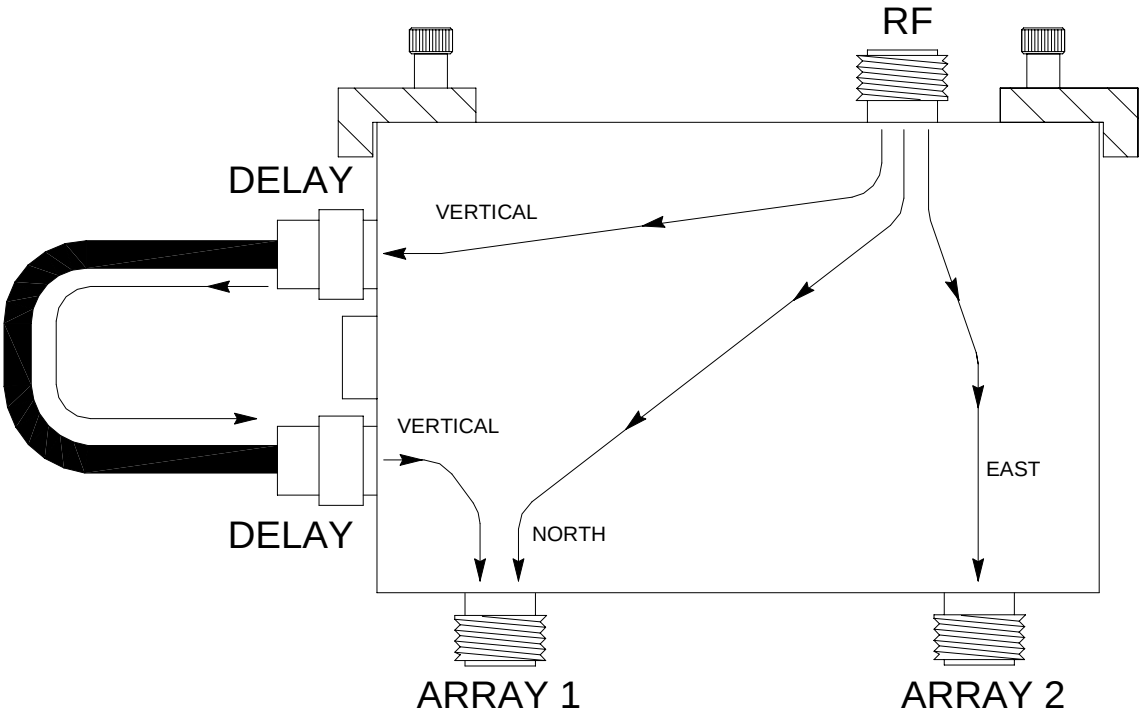

Figure 5-25 BSU Coaxial Switch Signal Routing

5.8.2 BSU Coaxial Switch Fault Isolation

1. **Turn off the AC power for the Power Amplifier Cabinet** at the breaker panel (breaker #17/19).

2. Remove the side panel from the BSU cabinet.

3. Disconnect the five Power Feed Cables from the *RF* input connector of each BSU switch assemblies.

4. Disconnect the ten extension cables (W111) from the output ports (*ARRAY 1* and *ARRAY 2*) from each of the BSU switch assemblies.

5. Connect PMT interface cable to the PMT Interface Connector on the front panel of the System Status Monitor. Start the PMT program, and login to the system.

6. Select the *SYSTEMS OPERATIONS* menu, select *TEST MODE*. Select *DOPPLER TEST* from the *TEST MODE* menu (Test Mode menu enables the BSU to be placed in specific beams positions.)

7. Turn on the *Site Master* and connect a coaxial cable to the *Test Port* on back of the *Anritsu*. Verify the Site Master is configured to measure "Return Loss" (labeled at top of display), and that Marker 1 (M1) is displaying "0.00 at 449.0 MHz" (labeled at the bottom of display).

   If *Anritsu* display is not correct, press *RECALL SETUP*, press *2*, then press *ENTER*. The display should return to the correct settings.

8. At the Doppler Test Setup Menu on the PMT (see Figure 5-26), use the *arrow* keys to move the cursor to *BEAM*, press *F5*, then select number for beam (East, North, Vertical) to be tested (high mode or low mode does not matter). Press *F6* to enter the beam selection, then press *F7* to start the test. This forces the BSU Switch Assembly to actuate the relays and change to the selected beam position. The LED indictor on the BSU front panel should change to desired beam.

```
4 WPS-234, PASSWORD REQUIRED                                Test
5 This could take 6 minutes
6 COMMAND EXECUTED

                  Doppler Frequency Scaling Test Setup Menu

 Submode A                        .  RF Attenuation    0  00-90 dB
                                       Must be divisible by 6
 Beam  1    1 = East High
            2 = East Low          .  Doppler Frequency  0   0 = 0.0
            3 = North High                                  1 = 15.56 Hz
            4 = North Low                                   2 = 31.11Hz
            5 = Vertical High                               3 = 46.67Hz
            6 = Vertical Low                                4 = 62.23Hz
                                                            5 = -46.67Hz
  RF Frequency  0 0 = On Channel                            6 = -31.11Hz
                  1 = Image                                 7 = -15.56Hz




                                                   start
1 Prev  2       3       4      5 select 6 enter 7test 8     9      0

                               (Numbers Represent Function Keys)
```

Figure 5-26 PMT Doppler Test Setup Menu

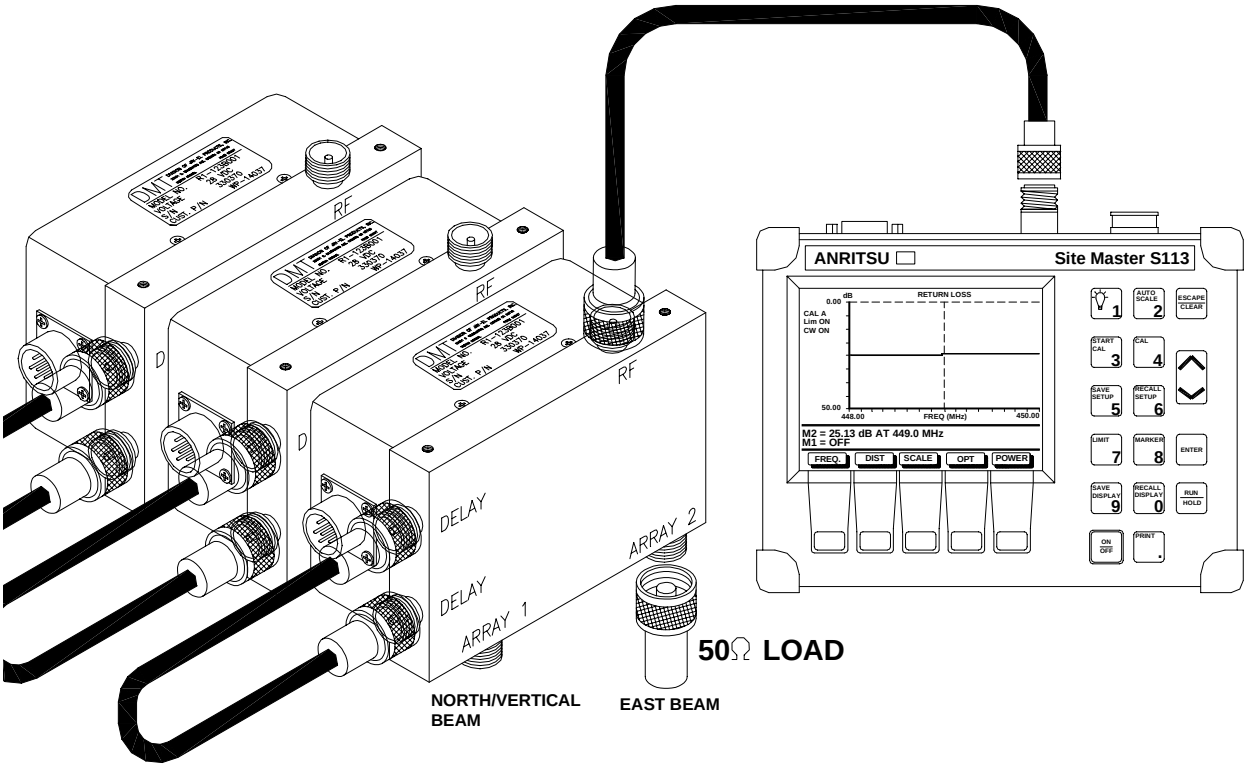

Figure 5-27 BSU Switch Return Loss Test Equipment Setup

9. Connect a 50-ohm load provided in *Anritsu* kit to the port labeled *ARRAY 2* (east beam) or *ARRAY 1* (north or vertical beams) as shown in Figure 5-27.

10. Connect the coaxial cable to the RF port of the switch being tested as shown in Figure 5-27. Wait for the sweep on the Anritsu display to cycle. Marker 1 (M1) displays the return loss reading (see Figure 5-28). The reading is an implied negative value, although it is displayed as a positive value.

    A good BSU switch should yield a return loss reading of > 20 dB (more negative 21,22,23). A failed BSU switch's return loss reading is < 20 dB (typically 1 or less).

11. Remove 50 ohm load and connect the load to next switch to be tested.

12. After all five switches have been tested in one beam, press *F1* on the PMT computer to return the setup menu. Repeat steps 8-11 until all five switches have been tested in the east, north, and vertical beams

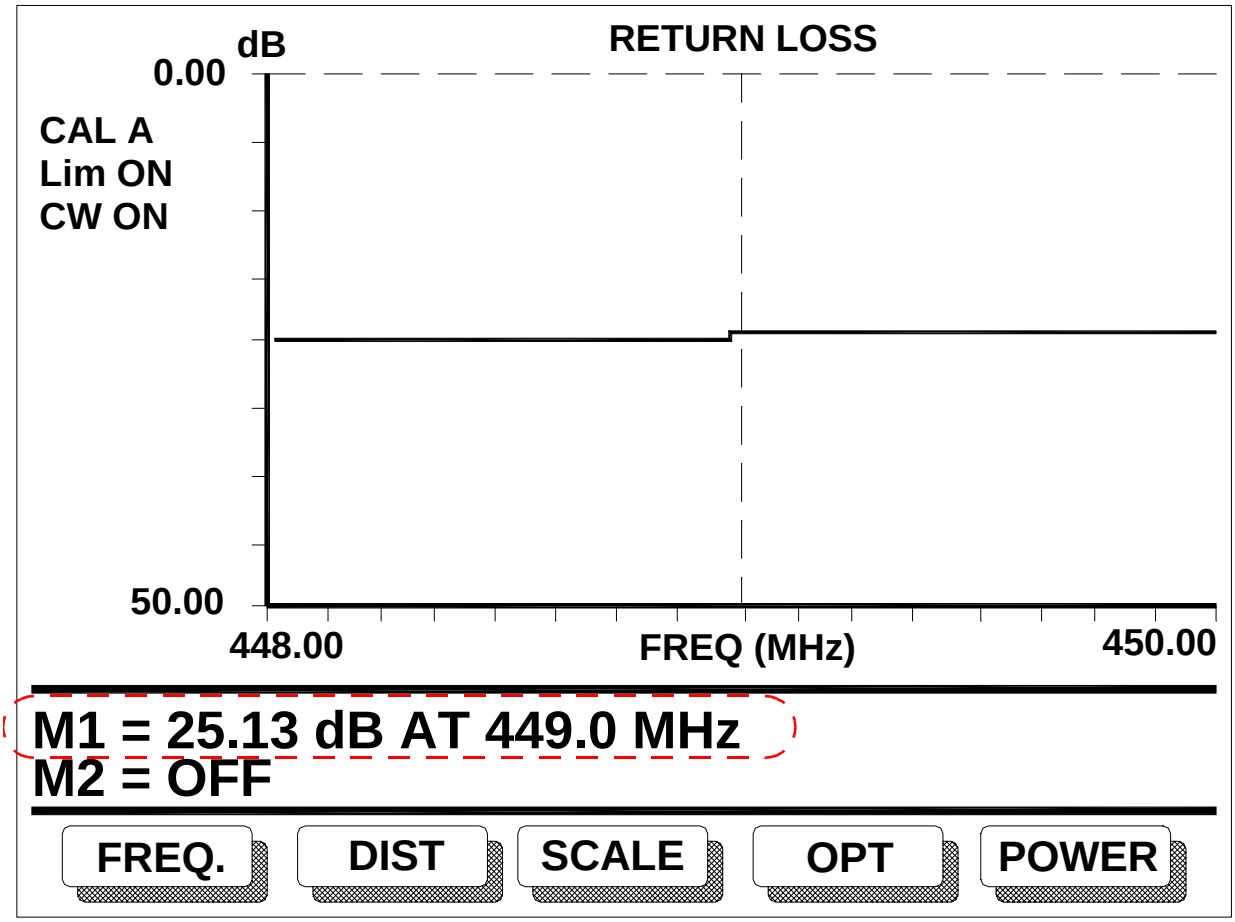

Figure 5-28 Anritsu Site Master Return Loss Display

5.8.3 BSU Coaxial Switch Replacement Procedure

1. Follow the standard power-down sequence described in Section 2.3.

2. Remove the side panel from the BSU Cabinet.

3. Disconnect all coaxial cables from the switch to be replaced.

4. Disconnect the control cable from the connector from the BSU switch.

5. Loosen the two captive fasteners at the top of the switch assembly, support the switch from below, and remove the switch assembly from bottom of the BSU chassis

6. Install the replacement switch and connect the control cable and Phase Shift Cable to the switch. Do not connect the input and output cables to the switch -- (See Note below). If other BSU switches require replacement, do so at this time.

***** NOTE *****

A BSU switch may fail the *Return Loss Test* because of an internal failure or malfunction. However, the driver circuitry that controls the switch's operation may be the cause of the failure. To verify that the driver circuitry is functioning, it is a good practice to repeat the *Return Loss Test* after replacing a suspect switch. If the new switch fails the Return Loss Test, the BSU driver circuit board is probably damaged, in which case, the entire BSU chassis assembly will require replacement.

7. If the new BSU switches pass the return Loss Test, connect the input and output cables to the BSU switches.

8. Install the side panel on the BSU Cabinet.

9. Follow the standard power-up sequence described in Section 2.4.

10. Using the PMT, return the radar to *Operational Mode*.

11. Verify the radar operates without further VSWR faults.

5.8.4 Type 3 449 MHz BSU Switch Assembly Replacement Procedure

1. Follow the standard power-down sequence described in Section 2.3.

2. Remove the side panel from the BSU Cabinet and the blank panel above the BSU front panel.

3. Loosen the retaining nuts on connectors P1, P2, and P3 on the rear panel of the BSU Switch Assembly and remove the connectors from ports J1, J2, and J3 (see Figure 5-29).

4. Loosen and remove the type "N" connectors on the 10 Extension Cables at the bottom of the BSU Switch Assembly.

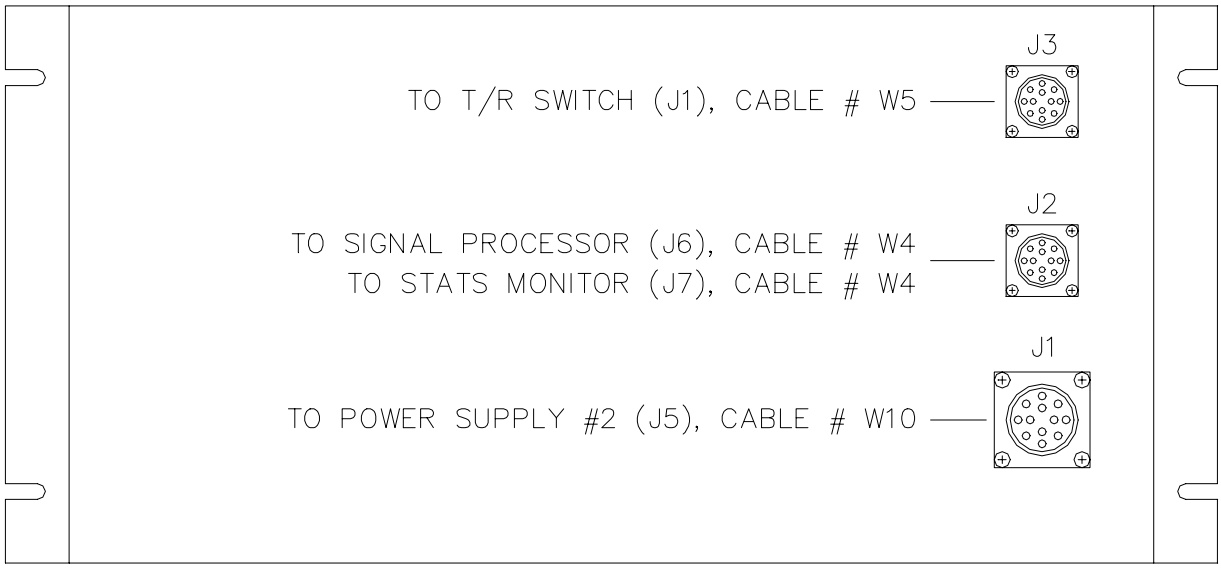

Figure 5-29 BSU Switch Assembly Rear Panel

5. Loosen and remove the type "N" connectors from the inputs of the BSU Switches [PHD8 - 12 in Figure 5-23] and disconnect the five Power Feed Cables.

> ***** WARNING *****
>
> **Make sure the Power Feed Cables (PHD8 - 12) are re-connected to the corresponding BSU switches (SW1 - SW5) as shown in** Figure 5-23. If the cables are connected to the wrong switch, the antenna beams will not be in their expected orientation and location. For 449 MHz profilers, this will seriously compromise the radar data.

6. Remove the four mounting screws on the front panel of the BSU and carefully lift the unit out the front of the BSU Cabinet.

7. Remove the top panel of the new BSU Switch Assembly to reveal the interface/ driver circuit boards. Verify that the interface cable connectors are properly seated and fastened to the circuit boards.

8. Install the new BSU Switch Assembly and replace the four mounting screws on the front panel of the cabinet.

9. Connect the ten Extension Cables to the bottom of the five switch assemblies.

> ****NOTE****
>
> Avoid cross threading when tightening the type "N" connectors. All connections should be as tight as possible since loose connections may cause a VSWR fault.

10. Reconnect the five Power Feed Cables to the BSU Switches [PHD8 - 12 in Figure 5-23].

11. Connect cables P1, P2, and P3 on the rear panel of the BSU Switch Assembly and tighten the retaining nuts.

12. Replace the blank panel above the BSU front panel.

13. Replace the side panel of the BSU Cabinet.

14. Follow the standard power-up sequence described in Section 2.4.

15. Verify the radar operates without further VSWR or BSU switch faults.

6 449 MHz Power Amplifier Cabinet

The 449 MHz Wind Profiler Power Amplifier, part no. WP-36001, consists of one single floor-standing 24” cabinet (see Figure 6-1). The cabinet houses ten high power amplifiers, two redundant driver amplifiers, the Serial Control and Monitoring Interface (SCMI) Assembly, control circuitry, and six integral system power supplies. Six integral fans provide forced-air cooling within the cabinet. Both side panels of the cabinet are removable, providing access to the electronic assemblies during maintenance activities. The location of the Power Amplifier (PA) Cabinet in the wind profiler Shelter Assembly is identified in Figures 2-2 and 2-5. Views of the cabinets internal components are presented in Figures 6-2 through 6-6. Figures 6-7 and 6-10 provide block/ wiring diagrams for the power amplifier assembly.

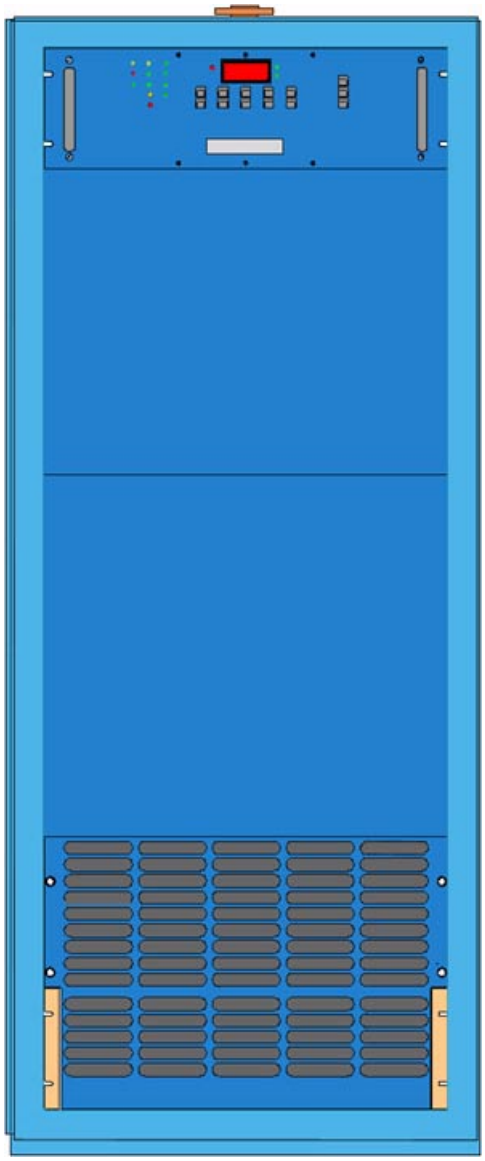

Figure 6-1 Power Amplifier Cabinet Front Panel

The power amplifier accepts RF input pulse widths between 0.6 to 30 microseconds. The power amplifier is capable of delivering up to 16,000 watts pulsed peak power at 449 MHz, with a maximum short term duty cycle of 15.0% and continuous duty cycle of 10.0%. Extensive monitoring capabilities are built into the power amplifier to protect the components from being damaged by excessive RF input pulse width or duty cycle, over-temperature conditions cause by internal fan failures or excessive shelter temperature, and over/under AC line voltage conditions. Any of the above mentioned conditions can cause the transmitter to shut down, and remain latched in that state until an operator clears the fault condition.

Normally, the transmitter operates in *Remote* mode, responding to control signals, and providing status information to the System Status Monitor (SSM) via an RS-232 interface. The transmitter can also be placed in *Local* mode using the Serial Control/ Monitoring Interface (SCMI). Local mode allows on-site technicians to use the SCMI’s front panel to control the transmitter and evaluate performance parameters. If the SCMI is left in *Local* mode, an internal fail-safe timer will cause the SCMI to automatically revert back to *Remote* mode after one hour.

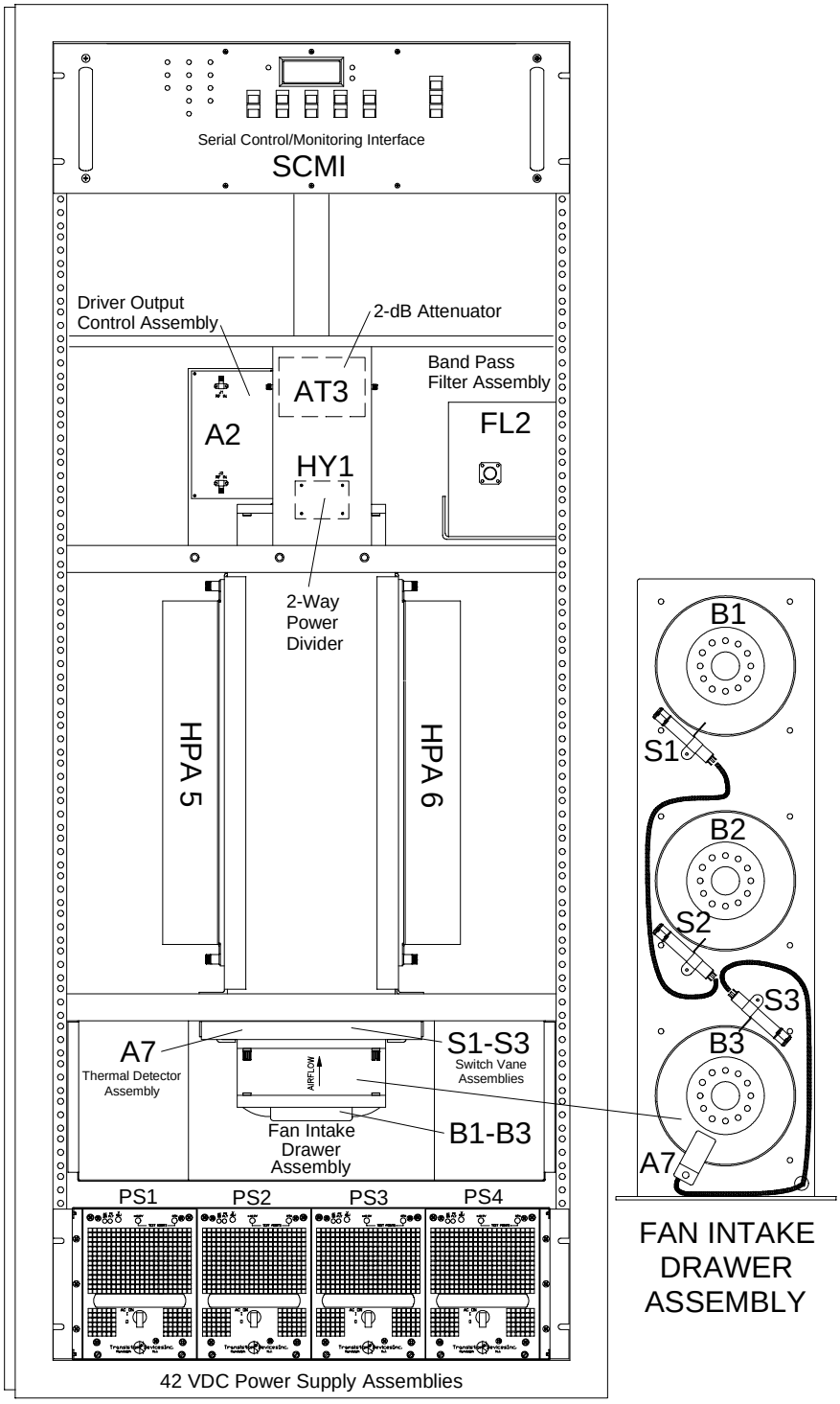

Figure 6-2 PA Cabinet Front View

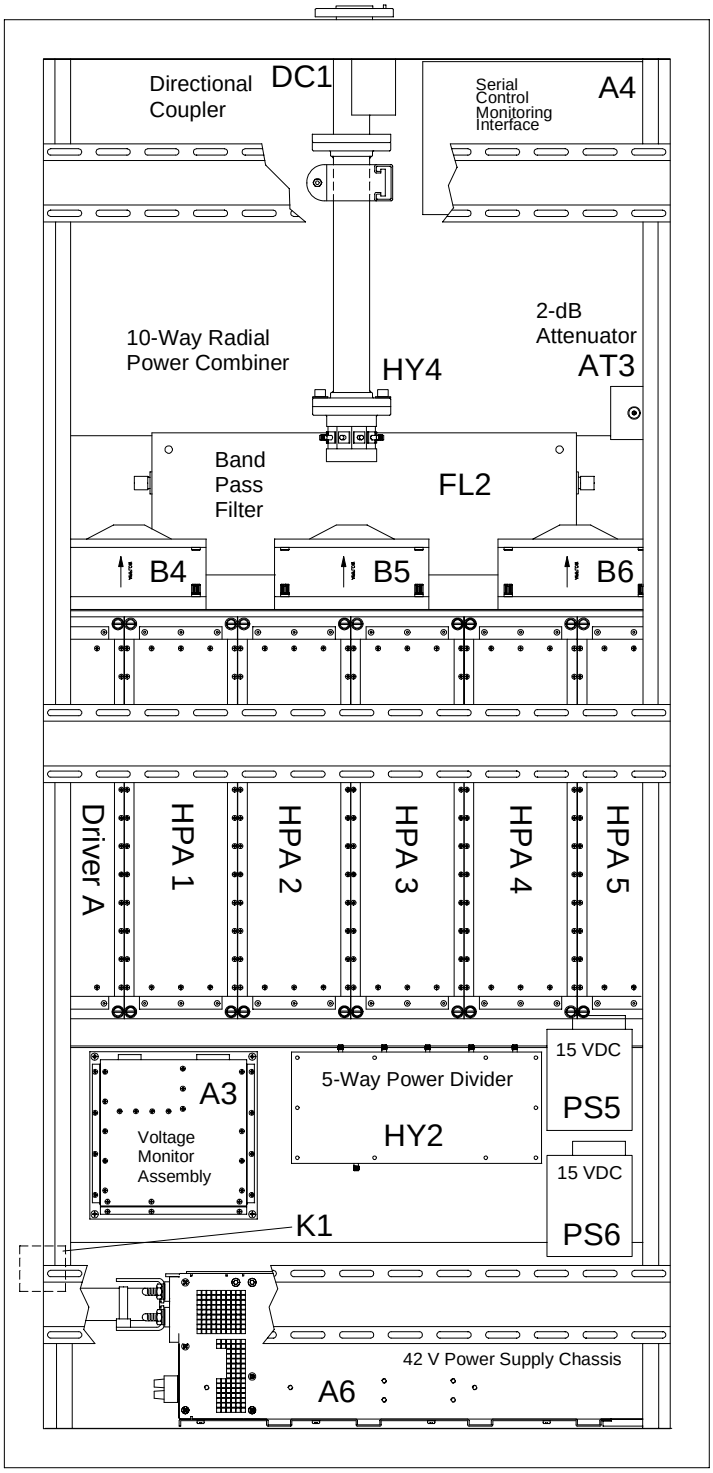

Figure 6-3 PA Cabinet Left Side View

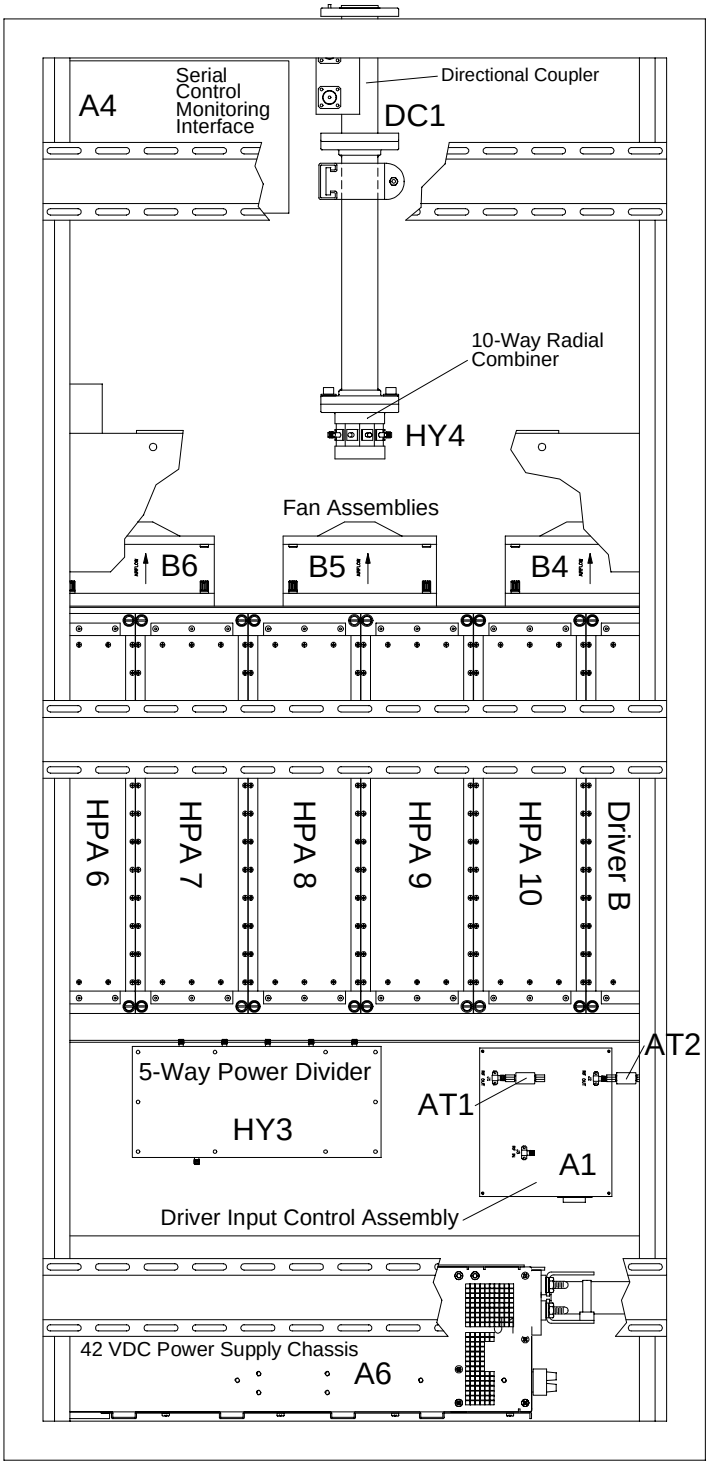

Figure 6-4 PA Cabinet Right Side View

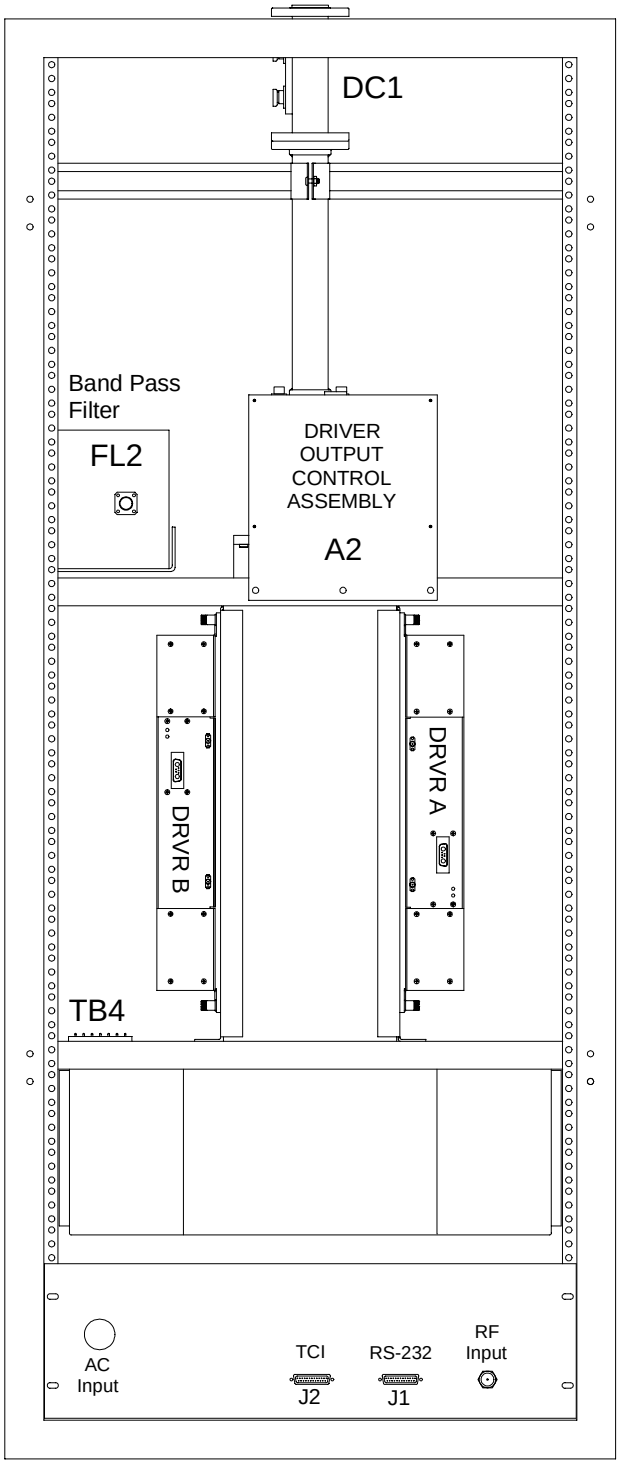

Figure 6-5 PA Cabinet Rear View

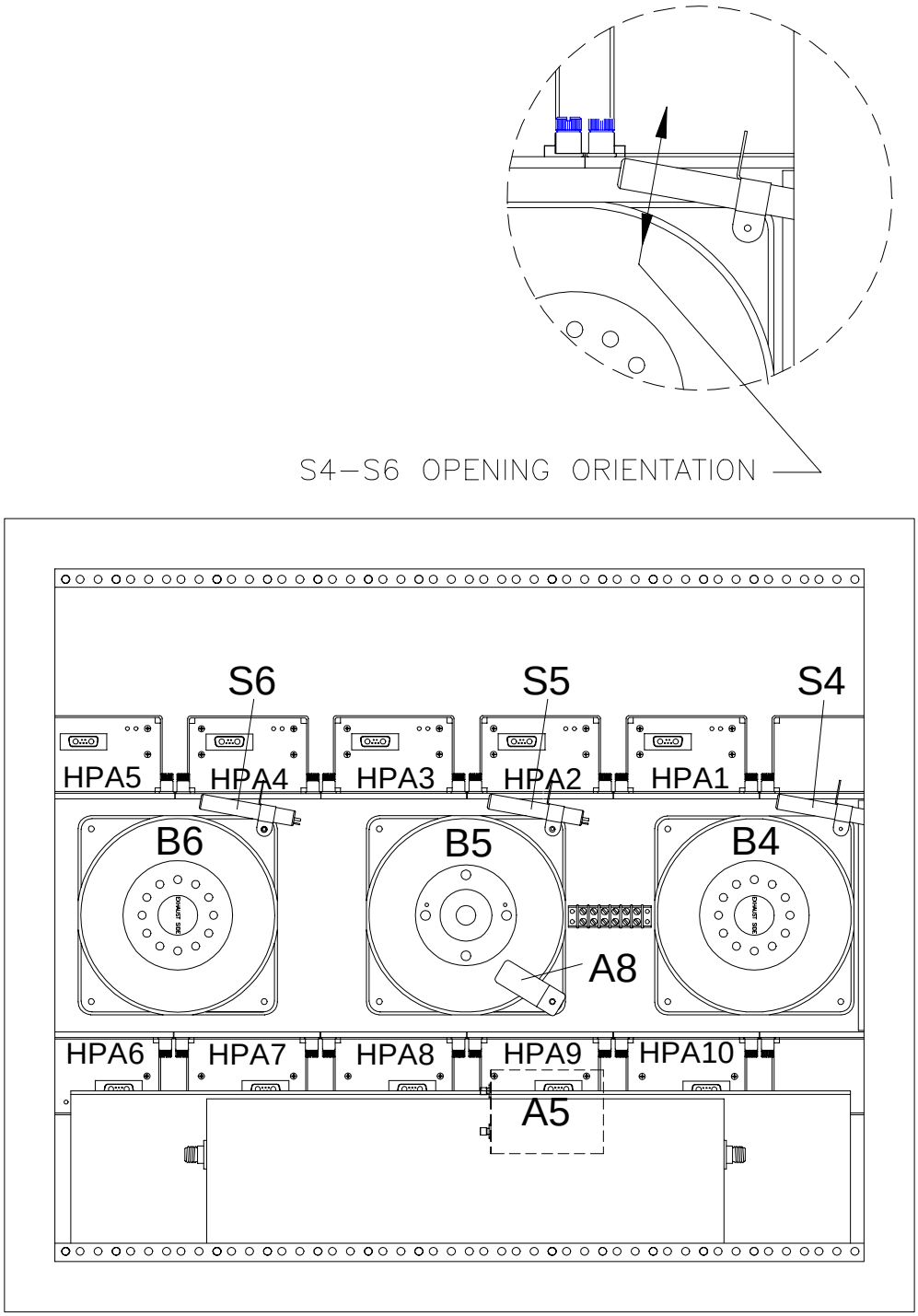

Figure 6-6 PA Cabinet Top View

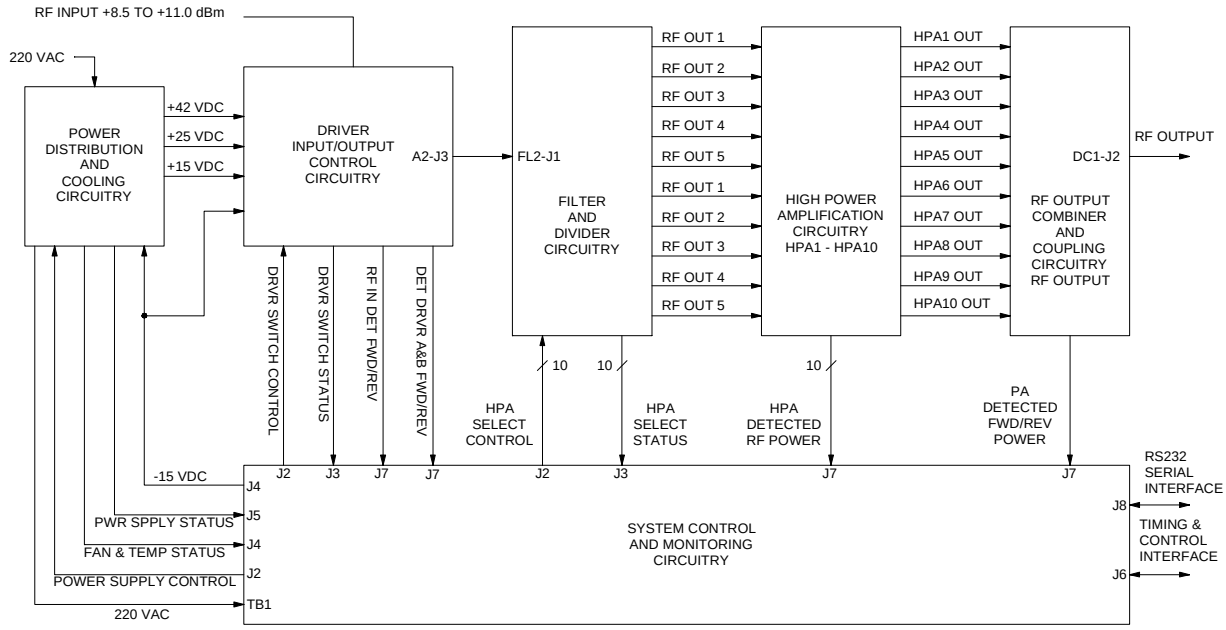

Figure 6-7 Power Amplifier Assembly Functional Block Diagram

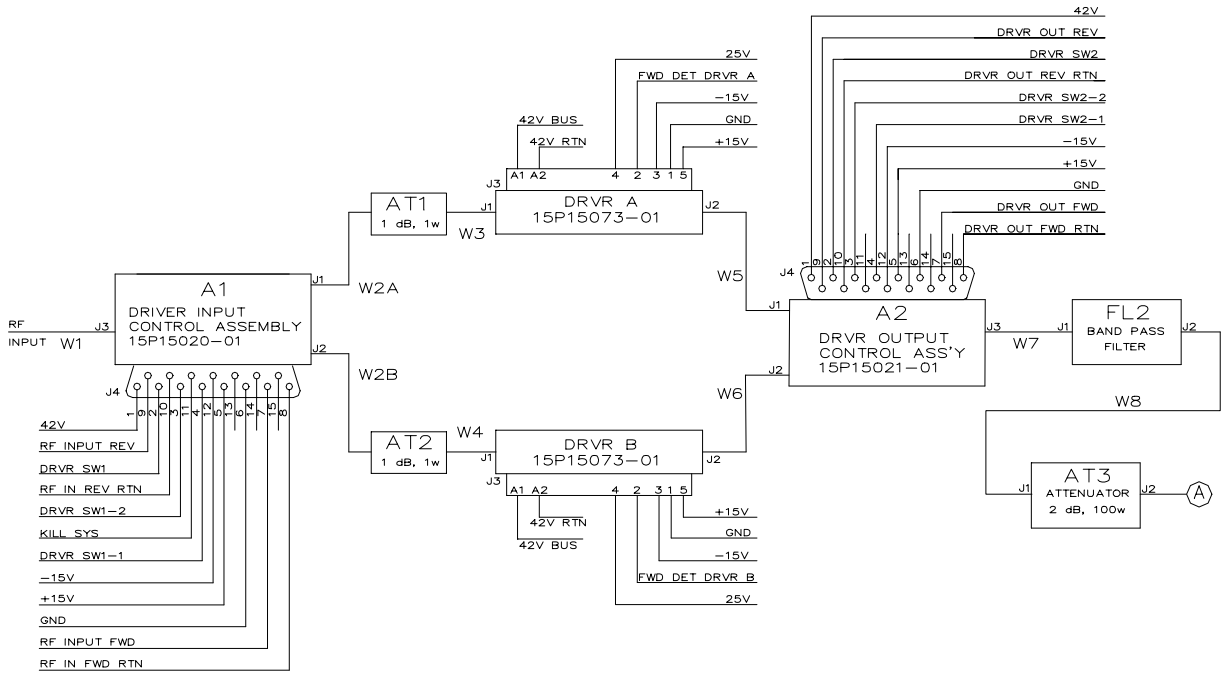

Figure 6-8 RF Amplification Stage Block/Wiring Diagram (1 of 2)

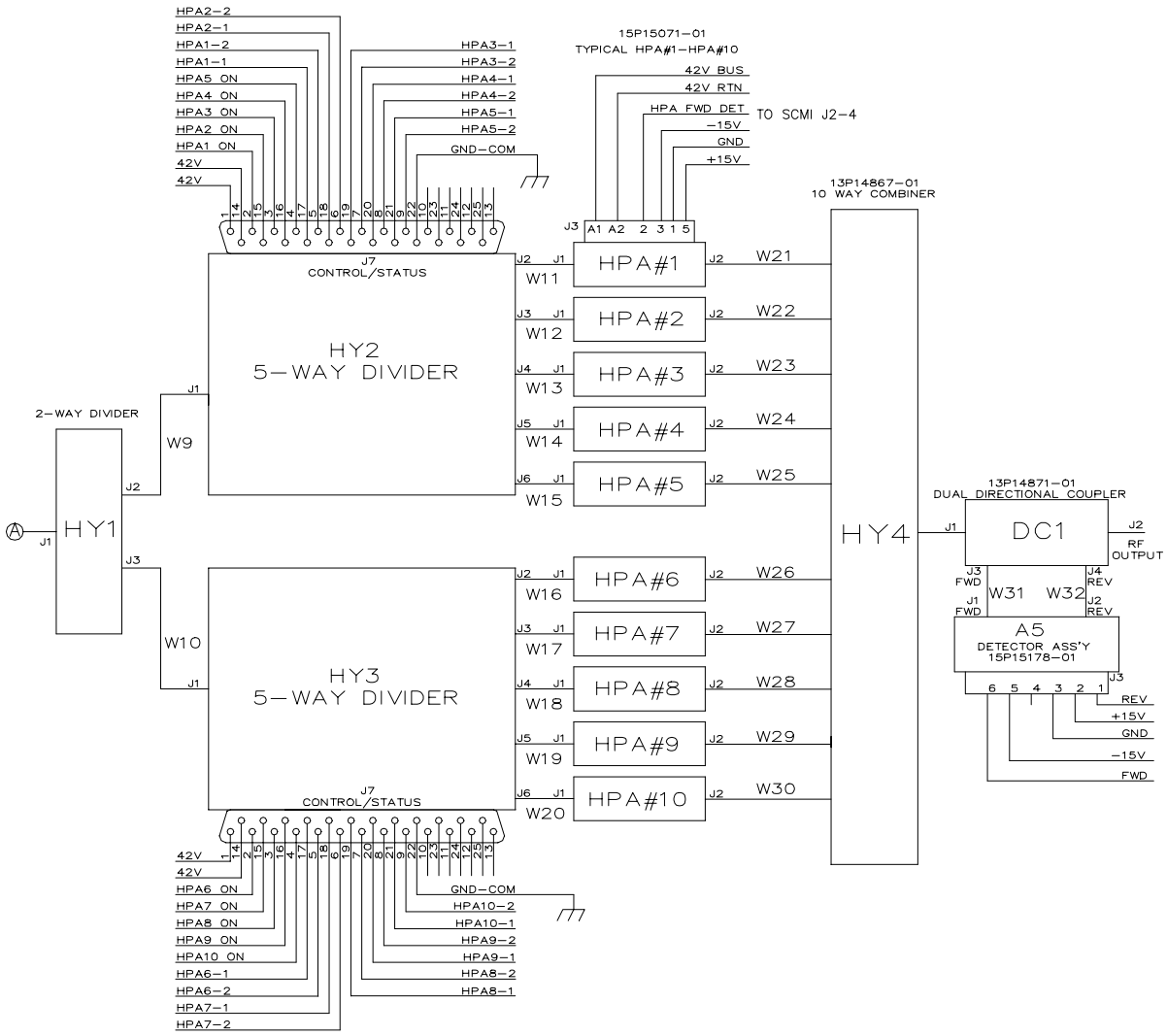

Figure 6-9 RF Amplification Stage Block/Wiring Diagram (2 of 2)

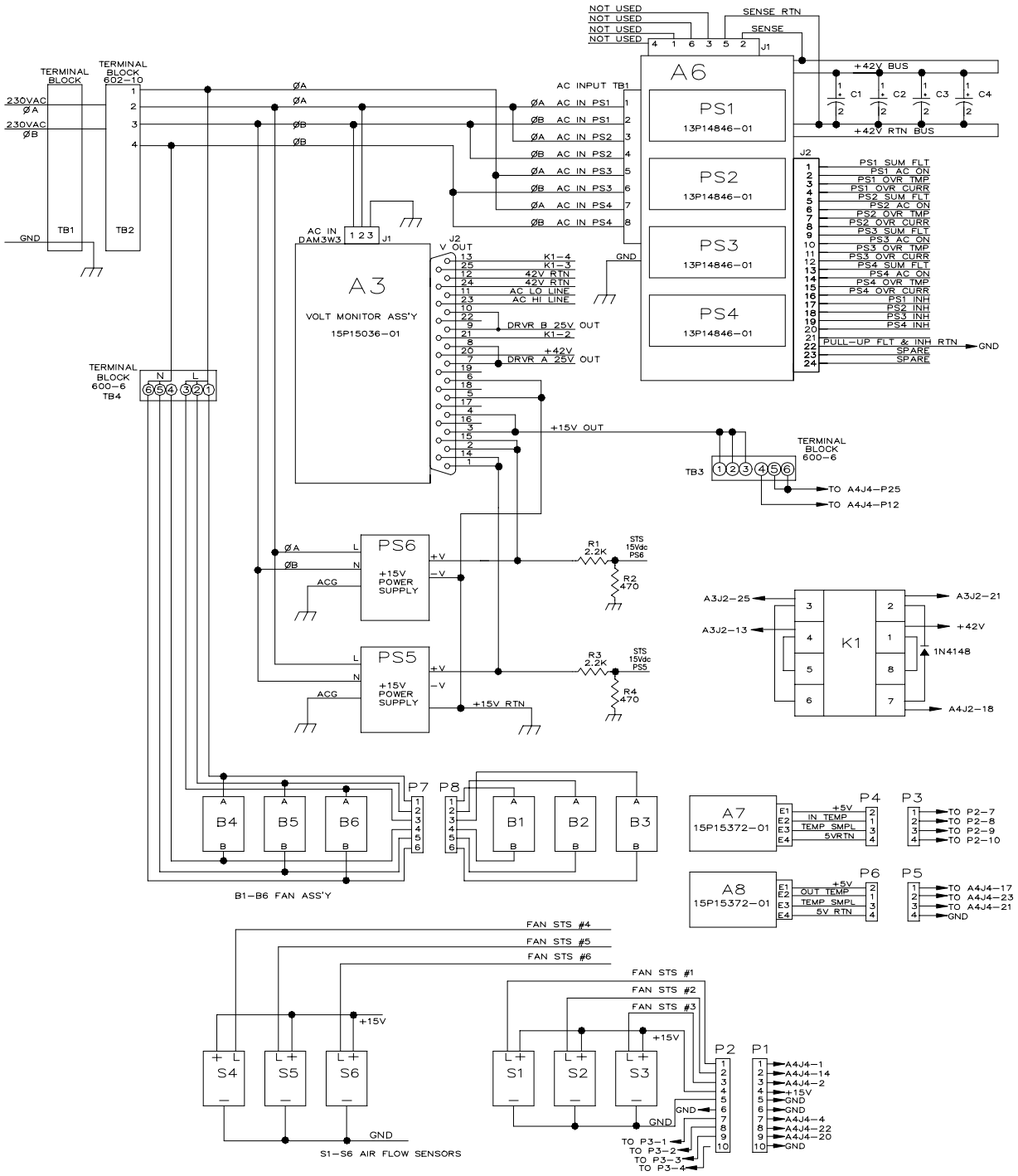

Figure 6-10 Power Amplifier Power Distribution & Cooling Diagram

6.1 Power Amplifier Cabinet Interfaces

RF output connection is made through 1-5/8-inch EIA connector (RF OUTPUT) located on the top center of the amplifier cabinet. All other system connectors are located on the power amplifier lower rear panel assembly. These include; RF input connector (RF INPUT), POWER connector terminal, and two PA INTERFACE connectors (see Figure 6-11). The following sections provide specifications for the PA Cabinet's control interfaces.

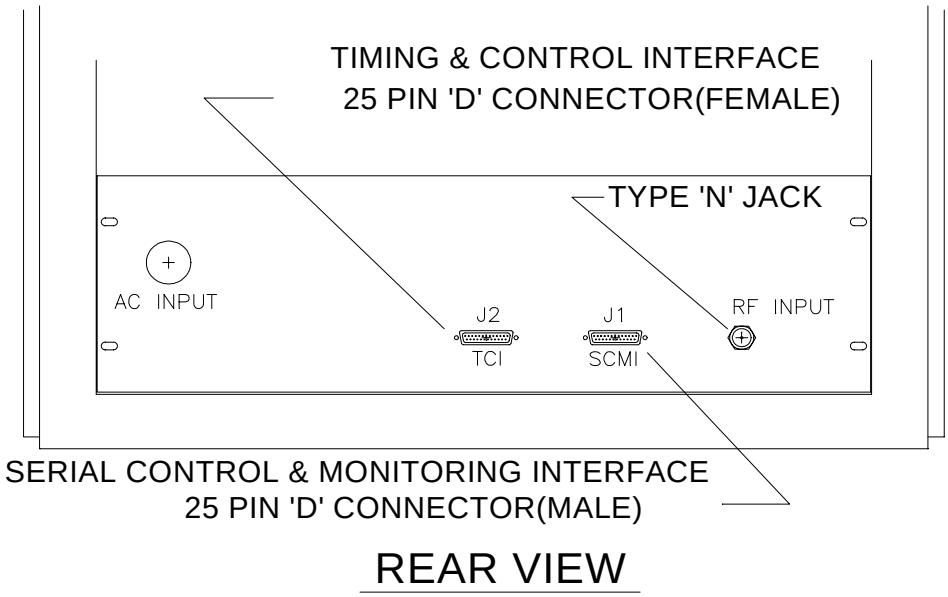

Figure 6-11 Power Amplifier Cabinet Interface Connectors

6.1.1 Timing and Control Interface (TCI)

The Timing and Control Interface (TCI) receives a bias timing signal from the Signal Processor and four control signals from the System Status Monitor (see Figure 6-12). Each TCI signal line uses a differential line driver/receiver for increased noise immunity. The bias timing signal generated by the Signal Processor is used to quiet the transmitter during periods when the radar is sampling atmospheric signals. The four control signals generated by the System Status Monitor are used to enable or disable High Power Amplifier Modules (HPA). Functionally, the HPA control lines serve three purposes; 1) To turn off individual or groups of HPA modules via Profiler Maintenance Terminal (PMT) commands. 2) Disable the transmitter when an antenna field or antenna fence access alarm is triggered. 3) Disable Q4 during the low mode if the radar is configured for "low mode half power". The HPA control signals are interpreted as a four (4) bit binary nibble (Q1-Q4), capable of representing 16 distinct combinations. Table 6-1 outlines the possible bit combinations and what effect they have on the transmitter HPA modules.

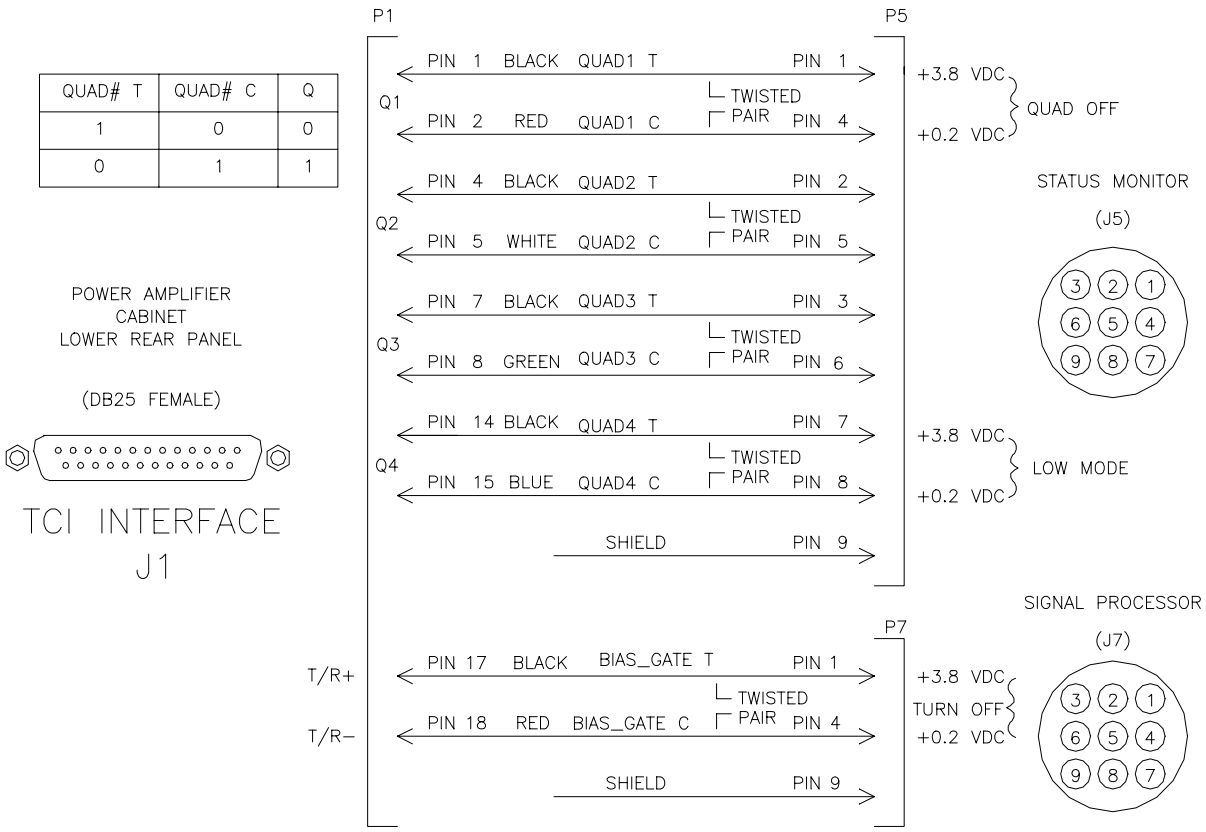

Figure 6-12 TCI Interface Specifications

Table 6-1 TCI HPA Module Control

Q1	Q2	Q3	Q4	Function	Relative Power
0	0	0	0	All HPA Modules ON (enabled)	0.0 dB ±0.3 dB
0	0	0	1	HPA Module #1 OFF	-0.9 dB ±0.3 dB
0	0	1	0	HPA Module #2 OFF	-0.9 dB ±0.3 dB
0	0	1	1	HPA Module #3 OFF	-0.9 dB ±0.3 dB
0	1	0	0	HPA Module #4 OFF	-0.9 dB ±0.3 dB
0	1	0	1	HPA Module #5 OFF	-0.9 dB ±0.3 dB
0	1	1	0	HPA Module #6 OFF	-0.9 dB ±0.3 dB
0	1	1	1	HPA Module #7 OFF	-0.9 dB ±0.3 dB

Table 6-1 TCI HPA Module Control

Q1	Q2	Q3	Q4	Function	Relative Power
1	0	0	0	HPA Module #8 OFF	-0.9 dB ±0.3 dB
1	0	0	1	HPA Module #9 OFF	-0.9 dB ±0.3 dB
1	0	1	0	HPA Module #10 OFF	-0.9 dB ±0.3 dB
1	0	1	1	HPA Module #1,2 OFF	-1.9 dB ±0.3 dB
1	1	0	0	HPA Module #3,4,5,6 OFF	-1.9 dB ±0.3 dB
1	1	0	1	HPA Module #7,8,9,10 OFF	-1.9 dB ±0.3 dB
1	1	1	0	HPA Module #1,3,4,6,7,9,10 OFF	-10.5 dB ±0.3 dB
1	1	1	1	All HPA Modules OFF (disabled)	RF Shutdown

6.1.2 RS-232 Serial Communications Interface

The Power Amplifier Cabinet is equipped with an RS-232 serial interface connector (J2), located on the lower rear panel of the cabinet (see Figure 6-11). This rear panel connector extends the SCMI serial interface (Channel 1, port J6) and provides the communications link between the SCMI and the System Status Monitor. As shown in Figure 6-13, the serial interface (J2) is a DB25 male connector, implementing standard RS-232C signals; *TxData*, *RxData*, and *Signal Ground*. The communications parameters for this interface are fixed at 9600 BAUD, 8 Data Bits, 1 Stop Bit, and NO Parity. The serial interface uses an ASCII command protocol to transfer data between the SCMI and the System Status Monitor. For more detailed information about the Command Protocol Syntax refer to Section 6.2.4 “Serial Communications Command Protocol” on page 6-24

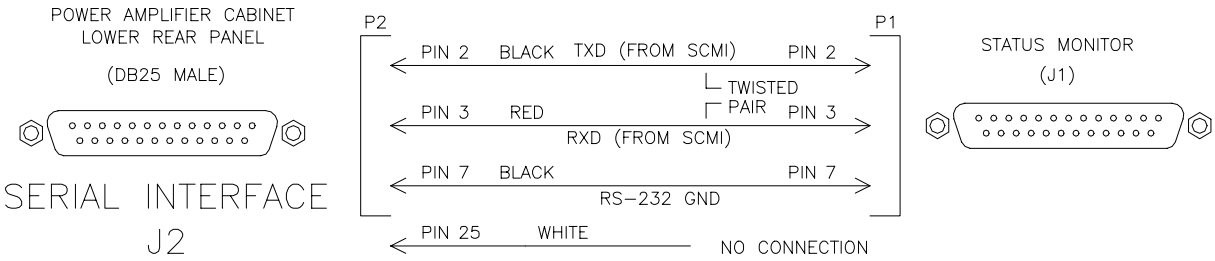

Figure 6-13 Serial Communications Port Configuration

6.2 Serial Control/Monitor Interface (SCMI)

The Serial Control/Monitor Interface (SCMI, pronounced "scummy"), assembly A4, consists of a single-drawer chassis located at the top front of the Power Amplifier Cabinet (see Figure 6-14). The SCMI contains a micro controller, analog and digital interfaces, and two redundant internal power supplies which allow the unit to continue to operate and provide power amplifier fault status even when other cabinet power supplies fail. The front panel provides an 8-character LED display, 16 LED indicator lamps to display operation and fault status, and 13 individual push-button function switches.

The SCMI oversees all transmitter components and operations. The SCMI operates in two modes, *Remote* and *Local*. In the *Remote* mode, transmitter status information is communicated to the System Status Monitor (SSM) via an RS-232 interface. In the *Local* mode, field maintenance personnel can utilize the front panel controls of the SCMI as a diagnostic tool to evaluate transmitter performance. If the SCMI is inadvertently left in *Local* mode, an internal fail-safe timer will cause the transmitter to automatically revert back to *Remote* mode after one hour.

Figure 6-14 Serial Control/Monitoring Interface (SCMI) Front Panel

The SCMI processes the forward and reflected (reverse) power levels detected throughout the RF amplification stage to continuously ensure that the power levels are within specified limits. Forward and reflected power levels are detected at the power amplifier output to calculate output VSWR. The SCMI also monitors driver operation and controls selection of the driver amplifiers and high power amplifiers.

The SCMI receives temperature information from two temperature sensor assemblies A7 and A8. Sensor A7 monitors the temperature of the air that is being drawn into the cabinet, and sensor A8 monitors the temperature of the air emitted from the power amplifier assembly. Cabinet cooling fans are monitored using six solid-state air-flow switch vanes that detect when a fan's CFM drops below acceptable limits.

The SCMI monitors voltage, current, and temperature indicators for each +42 VDC Power Supplies. The SCMI detects failure of redundant +15 VDC Power Supplies by measuring their output voltage. The SCMI also monitors it's own internal redundant power supplies for fault conditions. Loss of two or more of any redundant power supply shuts down the power amplifier.

The 220 VAC power line voltage is monitored by the SCMI to protect the power amplifier from excessive voltage levels. If the AC voltage level goes above or below specified limits, the power amplifier shuts down.

Major faults such as high reflected power (VSWR), over temperature, and excessive AC voltage will cause the SCMI to generate an RFKILL command signal which shuts down the operation of the RF amplification stage. In order eliminate any false failure detections, the SCMI performs a thorough self test before evaluating any of the system performance data. An internal watchdog timer resets the micro controller in the event it is idled as a result of an external transient. The extensive instrumentation included with the power amplifier allows SCMI to completely verify acceptable system performance, as well as to achieve 100% fault detection and isolation to a single line replaceable unit (LRU).

6.2.1 SCMI Front Panel Indicators and Controls

The power amplifier is normally operated from a remote site computer terminal but can, when needed, be operated locally with the Serial Control/Monitor Interface (SCMI) assembly A4 front panel controls. The local mode of operation is used during the performance of on-site maintenance and testing procedures. Figure 6-15 and Figure 6-16 identify the SCMI front panel indicators and control. Table 6-2 and Table 6-3 provide descriptions of the SCMI front panel indicators and controls.

Figure 6-15 SCMI Mode and Fault Indicator LEDs

Table 6-2 SCMI Mode and Fault LED Indicator Descriptions

Status Indicator Lamps	Function Group of LEDs that illuminate to give current state of the power amplifier
OPERATE	Indicates RF input signal is minimally attenuated by amplifier's Drive Input Control circuit (RF KILL is inactive.)
STBY	*Stand By*: Indicates RF input signal is fully attenuated by amplifier's Driver Input Control circuit (RF KILL is active.)
REM	*Remote*: Indicates control of amplifier is under control by the remote computer (System Status Monitor). If the LED is *OFF*, the SCMI is in *Local* Mode.
CPU FLT	Indicates a fault from the internal SCMI micro controller.
HPA	Indicates a malfunction in one or more of the high power amplifier modules.
DRVR	Indicates malfunction with one or both driver amplifiers.
RF IN	Indicates an overdrive or low RF input level.
DTY/PW	Indicates problem with the pulse width or duty cycle of the RF input signal.
SW	*Switch*: Indicates problem with a coaxial switch. These switches are located in the Driver Input and Output Control Assemblies (A1 and A2) and in both 5-Way Power Dividers (HY2 and HY3).
PS	*Power Supply*: Indicates malfunction in one or more 42 VDC, 15 VDC or internal SCMI power supplies.
AC	Indicates problem with the prime AC input power.

Table 6-2 SCMI Mode and Fault LED Indicator Descriptions

Status Indicator Lamps	Function Group of LEDs that illuminate to give current state of the power amplifier
THRM	Indicates over temperature condition in power amplifier cabinet.
FAN	Indicates malfunction with one or more of fans B1 through B6.

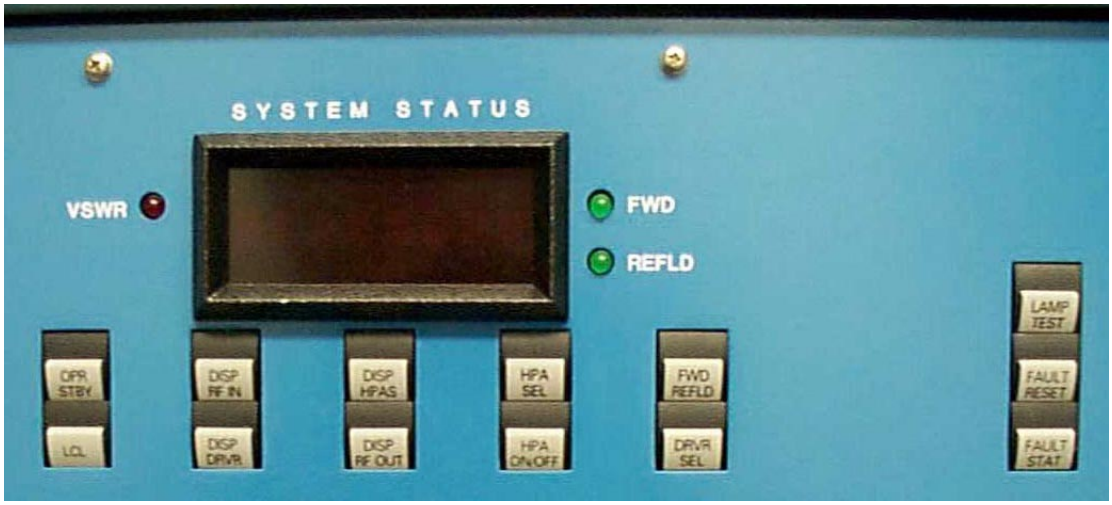

Figure 6-16 SCMI Front Panel Display and Controls

Table 6-3 SCMI Front Panel Control Descriptions

Power Amplifier Control Switches	Function
VSWR	Indicates power amplifier VSWR exceeds required operating limits.
System Status	As selected by power amplifier control switches, display forward power in watts (W) and reflected power in watts (W). Also display FAULT information when a failure occurs in power amplifier.
FWD	An LED lamp (green) that lights when forward power has been selected, by the *FWD/RFL* switch, for display on the digital status display.

Table 6-3 SCMI Front Panel Control Descriptions

Power Amplifier Control Switches	Function
REFLD	An LED lamp (green) that lights when reflected power has been selected, by the *FWD/RFL* switch, for display on the digital status display.
OPR STBY	*Operate/Standby*: Toggles between Operate (OPR) and Standby (Standby) modes. The current mode is indicated by the corresponding LEDs *OPR* and *STBY*.
LCL	*Local/Remote Toggle*: Sets amplifier in local control mode disabling remote control and permitting operational control SCMI front panel controls. Local mode automatically reverts to remote mode of operation after 60 minutes have elapsed. Remote status functions are still available.
DISP RF IN	*Display RF In*: Selects the RF input port, and allows forward and reflected power to be sampled and displayed on the Digital Status Display.
DISP DRVR	*Display Driver*: Displays driver A or driver B amplifier forward power. Also allows forward and reflected driver power from the driver control unit output section assembly A2 to be sampled and displayed on the Digital Status Display.
DISP HPAS	*Display High Power Amplifiers*: Displays the high power amplifier forward power to be sampled and displayed on the Digital Status Display.
DISP RF OUT	*Display RF Out*: Selects the final RF output port, and allows forward and reflected power to be sampled and displayed on the Digital Status Display.
HPA SEL	*High Power Amplifier Select*: Addresses the high power amplifier (HPA) selected to be enabled or disabled. Also selects the HPA power sample to be displayed. Repeat pressing this switch to incrementally step through all 10 HPA modules.

Table 6-3 SCMI Front Panel Control Descriptions

Power Amplifier Control Switches	Function
HPA ON/OFF	*High Power Amplifier ON/OFF*: Enables or disables the high power amplifier selected by the HPA SEL Switch. Turning on an HPA in the RF chain increases the final RF output power of the power amplifier. Turning off an HPA in the RF chain decreases the final RF output power of the power amplifier.
FWD REFLD	*Forward/Reflected Power Toggle*: Selects between forward (FWD) and reflected (REFLD) power for display on the digital status display.
DRVR SEL	*Driver Select Toggle*: Selects the driver amplifier for operation between DRVR A and DRVR B.
LAMP TEST	Momentarily lights all amplifier front panel indicators to test their functionality.
FAULT STAT	Selects components of the amplifier for performance monitoring via Digital Status Display.
FAULT RESET	Clears all latched faults that shut down power amplifier operation.

6.2.2 SCMI Assembly Replacement Procedure

1. Follow the standard power-down sequence described in Section 2.3.

2. Remove right-side cabinet panel.

3. Remove four screws securing assembly A4 front panel to cabinet.

4. Slide assembly A4 from cabinet rack until rear panel connectors are visible.

5. Disconnect AC INPUT power plug.

6. Disconnect mating connectors of the corresponding cable harness from connectors A4J2 through A4J9.

7. Support assembly A4 and carefully slide from cabinet rack.

8. Install replacement assembly A4 by sliding unit partially into the cabinet.

9. Connect the mating connector of the corresponding cable harness to appropriate rear panel connectors of assembly A4.

10. Connect the AC INPUT power plug.

11. Slide assembly A4 into the cabinet rack until the rear face of the front panel contacts the mounting angle of the cabinet.

12. Secure the unit to the rack with four screws through the slotted holes in the front panel.

13. Install right-side cabinet panel.

14. Follow the standard power-on sequence described in Section 2.4.

15. To verify proper operation of the SCMI, see Section 6.17 “Power Amplifier Performance Checks and Alignment Procedures” on page 6-68

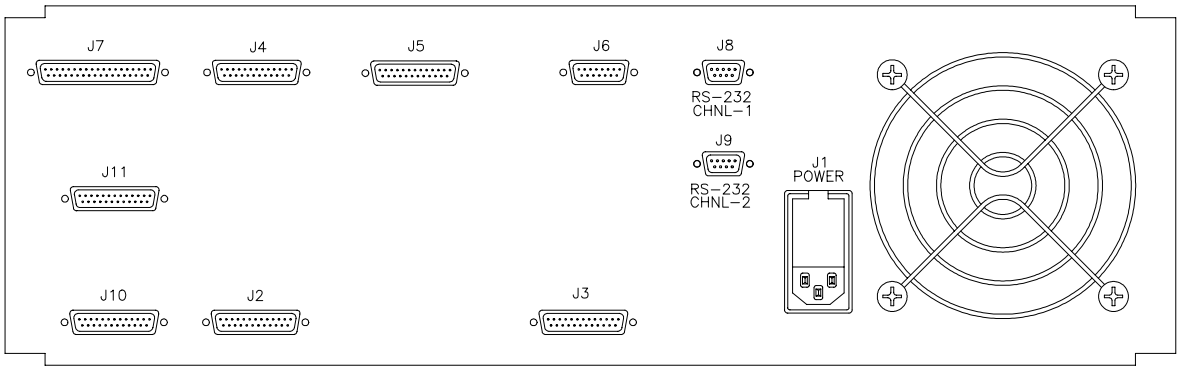

Figure 6-17 SCMI Rear Panel

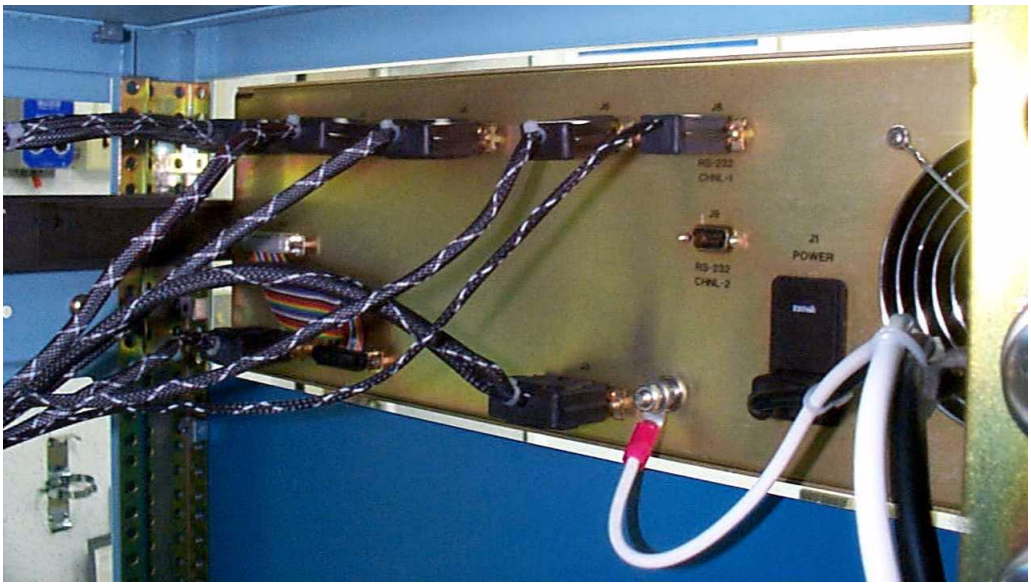

Figure 6-18 SCMI Rear Panel Cable Connections

6.2.3 SCMI Internal Component Layout & Interconnection Diagrams

Figure 6-19 shows the internal component layout of the SCMI as viewed from the top with cover removed. Sub-assembly component designations are silk-screened on the chassis near each sub-assembly. Figure 6-20 is an interconnection diagram for the SCMI's sub-assemblies. Figure 6-21 is the SCMI's external connection diagram providing signal names and pinouts for each of the rear panel connectors.

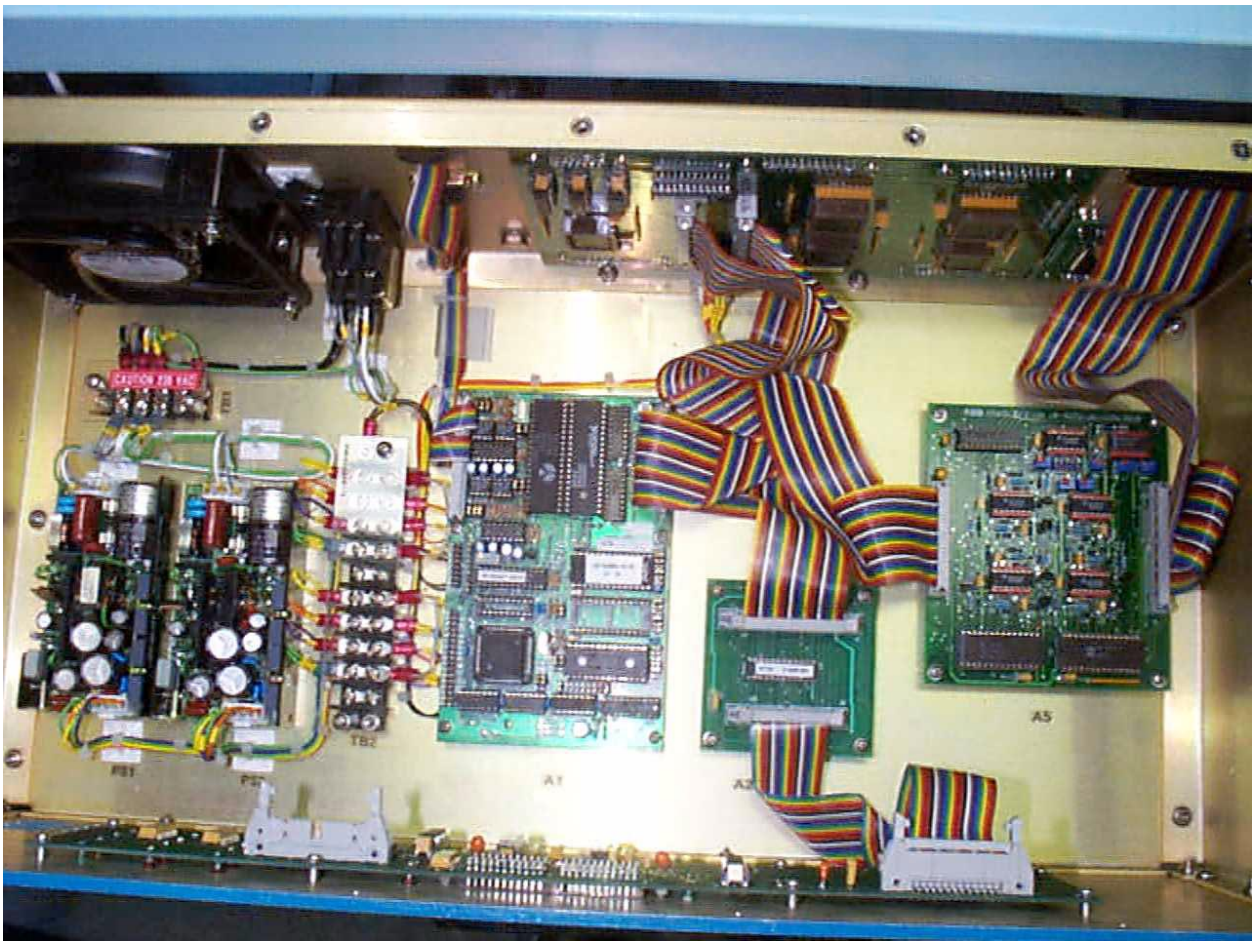

Figure 6-19 SCMI Internal Component Layout

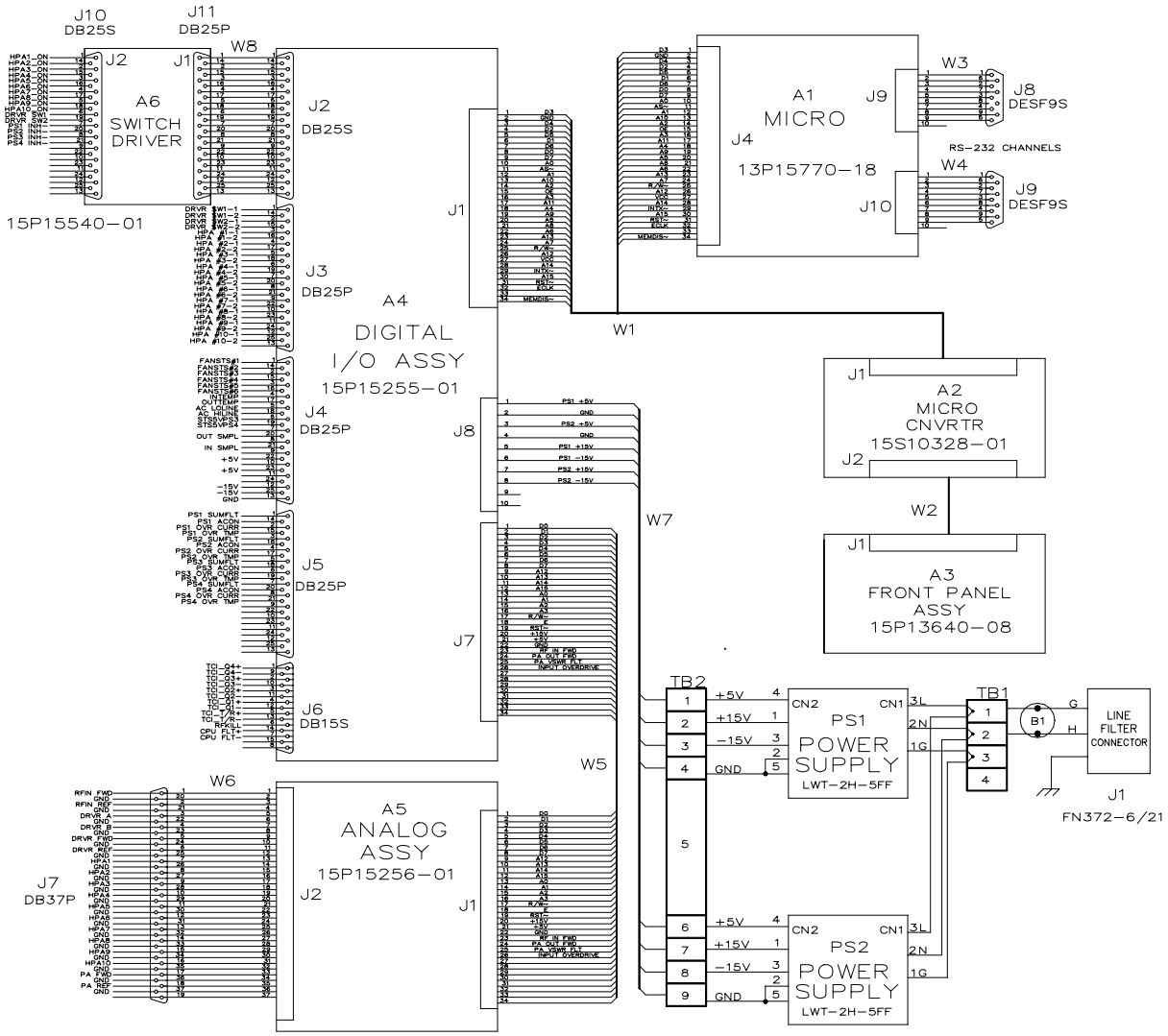

Figure 6-20 SCMI Internal Interconnection Diagram

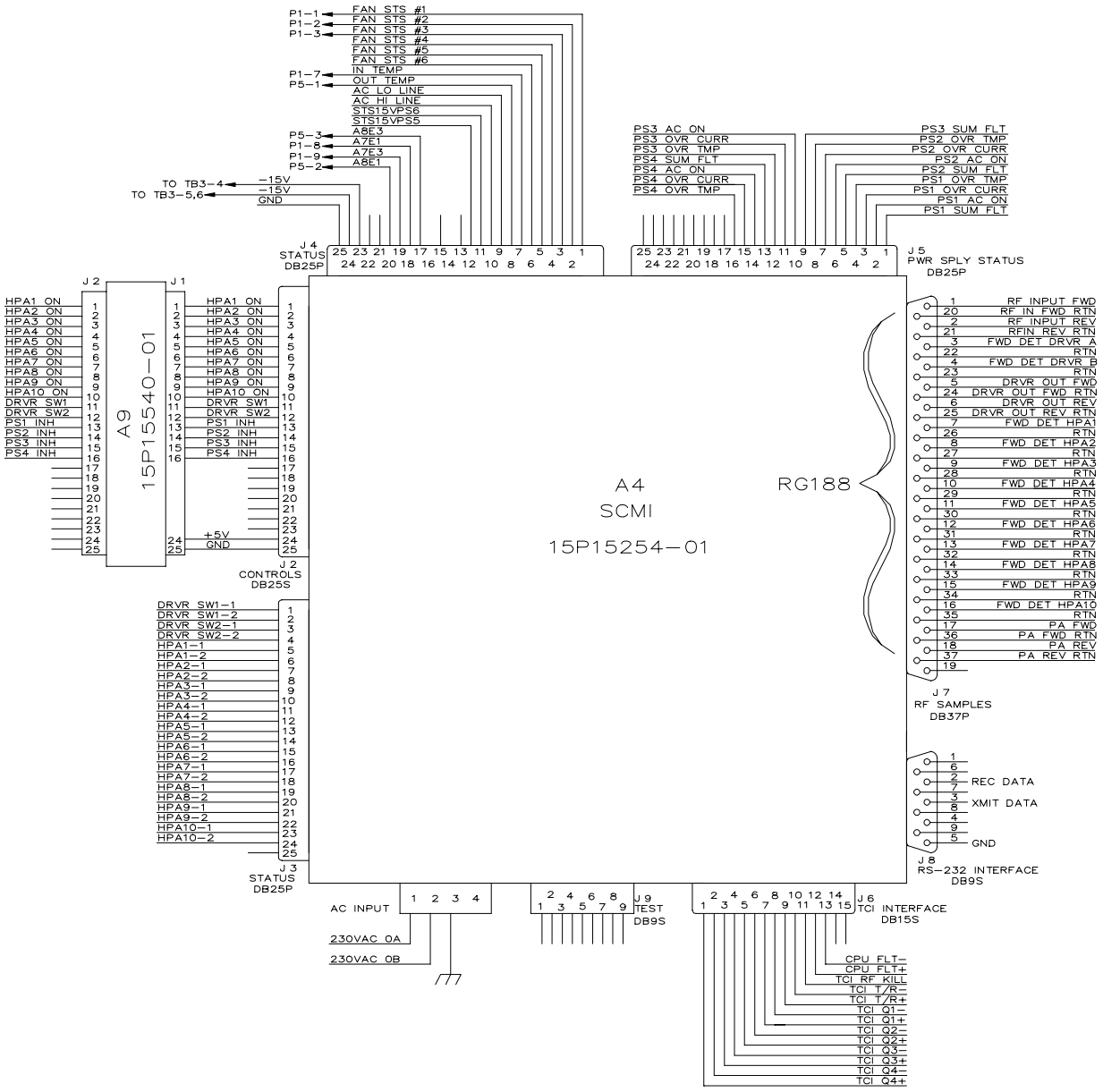

Figure 6-21 SCMI Interface Diagram

6.2.4 Serial Communications Command Protocol

The SCMI continuously monitors the transmitter health and status, but does not send any information until it is polled by the System Status Monitor. The SCMI only responds to a specific set of commands, this section covers the syntax of these commands and how to interpret the responses.

The SCMI has two serial interface ports, *Channel 1* (J6) is the primary link between the SCMI and System Status Monitor. *Channel 2* (J9) is a secondary port that can be used to connect an ASCII terminal to the SCMI for diagnostic purposes. Both *Channel 1* and *Channel 2* interfaces use the same command protocol. Using the command syntax described in this section, an on-site technician can type ASCII commands on a terminal and can poll the SCMI for status information.

Message types - A message type is exactly three ASCII characters followed by either a space or a message terminator. Message types supported are RSS, RMP, RKL, RES, RDR, RSM, D and Help/?.

Data bytes - A data byte is an 8-bit value in hexadecimal form represented by two ASCII characters per data byte. For example, a value of one is represented as "01" and decimal two hundred fifty five as "FF". Data bytes are separated from other data bytes or the message type by a single space character.

Message terminators - Accepted message terminators are the ASCII "Return" (hex OD) and/or “Line feed" (hex OA) characters. The SCMI responses are always terminated with a return <CR> followed by a line feed <LF>.

The ASCII escape character <ESC> may be used by the remote computer to clear the SCMI command line. This may be useful to initialize the communication between the computer and the SCMI, to clear partially completed or suspect commands that may have been sent to the SCMI.

The SCMI is case-insensitive. For example, all lower case alphabetic characters received from the remote computer are converted to upper case characters by the SCMI. All alphabetic characters sent to the remote computer by the SCMI are upper case only.

Help Command (?).

The ? command is sent from the remote computer to command the SCMI to display status and fault as requested. To send the command, type ?<CR> or HELP<CR> at the remote computer terminal and note the following.

Table 6-4 SCMI Protocol Commands

Command Name	Command Description
HELP/?	Displays the help menu as follows:
D(#)	Displays System Status (optional module number).
RSS	Read System Status (hex dump)
RMP(#)	Read Module Parameters (hex dump, module # in hex)
RES	Reset Power Amplifier
RDR	Reset Driver Command
RKL	RF Kill (PA Shutdown) Command
RSM	Reset Module

ERROR RESPONSES

Error responses are sent by the SCMI when input from the host is invalid or not recognized. No response will be sent from the SCMI when it receives empty lines from the host. This includes back to back message terminators or white space between message terminators. Command lines sent from the host with invalid message types (those other than RSS, RMP,RDR, RKL or RSM) will cause an *invalid message* response from the SCMI as follows: INV<RETURN><LF>. Read Module Parameter (RMP) commands without valid module address byte will cause an *Invalid Module Address* response from the SCMI as follows: IMA<RETURN><LF>.

Display Command (D).

The D command is sent from the remote computer to command the SCMI to display status and fault as requested. To send the command, type D<CR> at the remote computer terminal and note the following responses from the SCMI.

```
System - OK/FLT  Driver - OK/FLT  Local - LOCAL/REMOTE
Driver Input - OK/FLT  Over Temperature - OK/FLT
Power Supplies - #1  OK/FLT   #2 - OK/FLT   #3 - OK/FLT   #4 - OK/FLT
Fan Status - #6  OK/FLT  #5 - OK/FLT  #4 - OK/FLT  #3 - OK/FLT  #2 - OK/FLT  #1 - OK/FLT
```

RES Command

The ***Reset Module*** command is sent from the remote computer to command the SCMI to reset the power amplifier. The initial command is a message type with exactly three ASCII characters, and an associated message terminator character. To send the command, type RES<CR> at the remote computer terminal. The SCMI responds with

RES OK<CR><LF> verifying that action ordered was accomplished in response to the RES command.

RDR Command

The ***Reset Driver Amplifier*** command RDR command is sent from the remote computer to command the SCMI reset the current power amplifier driver module The initial command is a message type with exactly three ASCII characters, and an associated message terminator character. To send the command, type RDR <CR> at the remote computer terminal. The SCMI responds with RDR OK<CR><LF> verifying that action ordered was accomplished in response to the RDR command.

RKL Command

The ***Power Amplifier Shutdown***, RFKILL command is sent from the remote computer to command the SCMI to block the RF input power of the power amplifier. The initial command is a message type with exactly three ASCII characters, and an associated message terminator character. To send the command, type RKL<CR> at the remote computer terminal. The SCMI responds with RKL OK <CR><LF> verifying that action ordered was accomplished in response to the RDR command

RSS Command

RSS is the ***Read System Status*** command. It returns 13 bytes of data containing overall system status information. Certain bytes are interpreted as bit fields containing true/false conditions. Other bytes are interpreted as scaled values. Refer to Table 6-5 for the definitions of the returned bytes.

Command: **RSS<CR>**

Response: **RSS b1 b2 b3 b4 b5 b6 b7 b8 b9 b10 b11 b12 b13<CR><LF>**

Table 6-5 RSS Command Response

Byte	Bit	Description	Value
b1	7	RF KILL Fault Summary	0=good 1=shutdown
b1	6	Driver Fault Summary	0=No driver faults 1=1 or more driver faults
b1	5	Module Fault Summary	0=No module faults 1= 1 or more module faults

Table 6-5 RSS Command Response

Byte	Bit	Description	Value
b1	4	Local/Remote Switch	0=Remote Mode 1=Local Mode
b1	3	PS Fault #4	0=good 1=fault
b1	2	PS Fault #3	0=good 1=fault
b1	1	PS Fault #2	0=good 1=fault
b1	0	PS Fault #1	0=good 1=fault
b2	0-7	Driver RF Output Power in Watts Byte, 8-bit Binary Value 0000000 = 0 = 0 W 1111111 = 255 = 867 W	Scale Factor: ~3.4 Watts per LSB
b3 b4	0-7 4-7	System Forward Power (sum of 10 modules) 12 bit binary Value b4 B3 7654 76543210 0000 00000000 = 0 1111 11111111 = 4095	
b4	3	Pulse Width Fault	0=good 1=fault
b4	2	Duty Cycle Fault	0=good 1=fault
b4	1	Driver RF Input Fault	0=good 1=fault
b4	0	Driver Control Network Fault	0=good 1=fault
b5	7	Driver A Status	0=good 1=fault
b5	6	Driver B Status	0=good 1=fault
b5	5	Fan # 6 Status	0=good 1=fault
b5	4	Fan # 5 Status	0=good 1=fault
b5	3	Fan # 4 Status	0=good 1=fault
b5	2	Fan # 3 Status	0=good 1=fault
b5	1	Fan # 2 Status	0=good 1=fault
b5	0	Fan # 1 Status	0=good 1=fault
b6	7	HPA # 8 Module Fault	0=good 1=fault
b6	6	HPA # 7 Module Fault	0=good 1=fault
b6	5	HPA # 6 Module Fault	0=good 1=fault
b6	4	HPA # 5 Module Fault	0=good 1=fault
b6	3	HPA # 5 Module Fault	0=good 1=fault
b6	2	HPA # 3 Module Fault	0=good 1=fault

Table 6-5 RSS Command Response

Byte	Bit	Description	Value
b6	1	HPA # 2 Module Fault	0=good 1=fault
b6	0	HPA # 1 Module Fault	0=good 1=fault
b7	0-7	RF Input Power in dBm Byte, 8-bit Binary Value 0000000 = 0 = 0 dBm 1111111 = 255 = 20.4 dBm	Scale Factor: ~0.08 dBm per LSB
b8	0-7	System RF Output Power in Watts (measured at 10:1 Combiner Output) Byte, 8-bit Binary Value 0000000 = 0 = 0 W 1111111 = 255 = 30,600 W	Scale Factor: ~120 Watts per LSB
b9	0-7	System Output VSWR in p Byte, 8-bit Binary Value 0000000 = 0 = 0 p 1111111 = 255 = 0.6375 p	Scale Factor: p ~0.0025 Watts per LSB
b10	0-7	AC Line Voltage Byte, 8-bit Binary Value, having 3 States	0000000 = 0 = Low 0111111 = 7F = OK 1111111 = FF = High
b11	7	SCMI Internal PS#2 Fault (PS#8)	0=good 1=fault
b11	6	SCMI Internal PS#1 Fault (PS#7)	0=good 1=fault
b11	5	Cabinet 15 VDC PS#5	0=good 1=fault
b11	4	Cabinet 15 VDC PS#6	0=good 1=fault
b11	3	42 VDC PS#4 Fault	0=good 1=fault
b11	2	42 VDC PS#3 Fault	0=good 1=fault
b11	1	42 VDC PS#2 Fault	0=good 1=fault
b11	0	42 VDC PS#1 Fault	0=good 1=fault
b12	7	Input Overdrive Fault (System)	0=good 1=fault
b12	6	Over Temperature Fault (System)	0=good 1=fault
b12	5	VSWR Fault (System)	0=good 1=fault
b12	4	Pulse Width/Duty Cycle Fault (System)	0=good 1=fault
b12	3	AC Voltage Fault (System)	0=good 1=fault
b12	2	RF KILL Status	0=good 1=fault
b12	1	HPA #10 Module Status	0=good 1=fault
b12	0	HPA #9 Module Status	0=good 1=fault

Table 6-5 RSS Command Response

Byte	Bit	Description	Value
b13	7	Spare Bit always = 0	Always 0
b13	6	Spare Bit always = 0	Always 0
b13	5	Output Air Temperature Fault	0=good 1=fault
b13	4	Input Air Temperature Fault	0=good 1=fault
b13	3	AC Line Voltage Low Fault	0=good 1=fault
b13	2	AC Line Voltage High Fault	0=good 1=fault
b13	1	RF Input Power High Fault	0=good 1=fault
b13	0	RF Input Power Low Fault	0=good 1=fault

RMP Command

RMP is the ***Read Module Parameters*** command and can be used to retrieve the status for an individual HPA module, RF Driver module, or cabinet 42 VDC power supply module. Specifying a hexadecimal Module Address (ma) 00-0F after the RMP command determines which module parameters are returned (refer to Table 6-6 below). Five bytes are returned, see Table 6-7,Table 6-8, and Table 6-9 for the definitions of the returned bytes. ma = Module Address (in two digit Hexadecimal)

Command: **RMP ma<CR><LF>**

Response: **RMP ma b1 b2 b3 b4 b5<CR><LF>**

Table 6-6 Module Hexadecimal Addresses

Module Address	Module Name	Module Address	Module Name
00	HPA #1	08	HPA #9
01	HPA #2	09	HPA #10
02	HPA #3	0A	Driver A
03	HPA #4	0B	Driver B
04	HPA #5	0C	42 Vdc PS #1
05	HPA #6	0D	42 Vdc PS #2
06	HPA #7	0E	42 Vdc PS #3
07	HPA #8	OF	42 Vdc PS #4

Table 6-7 RMP Command Response for Module Address 00-09 (HPA 1-10)

Byte	Bit	Description	Value
b1	7	Module Fault Status	0=good 1=fault
b1	2-6	Spare - the bit is always 00000	0
b1	1	HPA Disable/Enable Status	0=Enable 1=Disable
b1	0	HAP Switch OFF/ON	0=ON 1=OFF
b2	0-7	Spare Byte is always 00000000	0
b3	0-7	Spare Byte is always 00000000	0
b4	0-7	Spare Byte is always 00000000	0
b5	0-7	HPA Module Forward Power Byte, 8bit Binary Value 76543210 00000000 = 0 = 0 Watts 11111111 = 255 = 2500 Watts	Scale Factor: ~9.8 Watts per LSB

Table 6-8 RMP Command Response for Module Address 0A-0B (RF Drivers A&B)

Byte	Bit	Description	Value
b1	2-7	Spare - the bit is always 000000	0
b1	1	Driver Module Selection Status	0=A 1=B
b1	0	Driver Module Fault	0=good 1=fault
b2	0-7	Spare Byte is always 00000000	0
b3	0-7	Spare Byte is always 00000000	0
b4	0-7	Spare Byte is always 00000000	0
b5	0-7	Driver Module Forward Power Byte, 8bit Binary Value 76543210 00000000 = 0 = 0 Watts 11111111 = 255 = 700 Watts	Scale Factor: ~2.7 Watts per LSB

Table 6-9 RMP Command Response for Module Address 0C-0F (42 V PS 1-4)

Byte	Bit	Description	Value
b1	1-7	Spare - the bit is always 0000000	0
b1	0	Power Supply Module Fault	0=good 1=fault
b2	0-7	Spare Byte is always 00000000	0
b3	0-7	Spare Byte is always 00000000	0
b4	0-7	Spare Byte is always 00000000	0
b5	3-7	Spare Byte is always 00000000	0
b5	2	Power Supply Over Temperature	0=good 1=fault
b5	1	Power Supply Over Current	0=good 1=fault
b5	0	Power Supply AC voltage OFF	0=ON 1=OFF

RSM Command

RSM the ***Reset Module*** Command can be used to attempt to reset the ten HPA modules. Two bytes are returned containing a status bit field for each HPA module. See Table 6-10 for the definitions of the returned bytes.

Command: **RSM b1 b2<CR>**

Response: **RSM b1 b2<CR><LF>**

Table 6-10 RSM Command Response

Byte	Bit	Description	Value
b1	7	Enable HPA #8	0=enable 1=disable
b1	6	Enable HPA #7	0=enable 1=disable
b1	5	Enable HPA #6	0=enable 1=disable
b1	4	Enable HPA #5	0=enable 1=disable
b1	3	Enable HPA #4	0=enable 1=disable
b1	2	Enable HPA #3	0=enable 1=disable
b1	1	Enable HPA #2	0=enable 1=disable
b1	0	Enable HPA #1	0=enable 1=disable
b2	4-7	Spare - the bits are always 0000	0

Table 6-10 RSM Command Response

Byte	Bit	Description	Value
b2	3	Enable Driver Channel B	0=enable 1=disable
b2	2	Enable Driver Channel A	0=enable 1=disable
b2	1	Enable HPA #10	0=enable 1=disable
b2	0	Enable HPA #9	0=enable 1=disable

6.3 Driver Input Control Assembly

The Driver Input Control (DIC) Assembly A1, controls the application of the RF input signal to one of two driver assemblies. The assembly is mounted on the right side of the air plenum just above the 42-volt power supplies as shown in Figure 6-22.

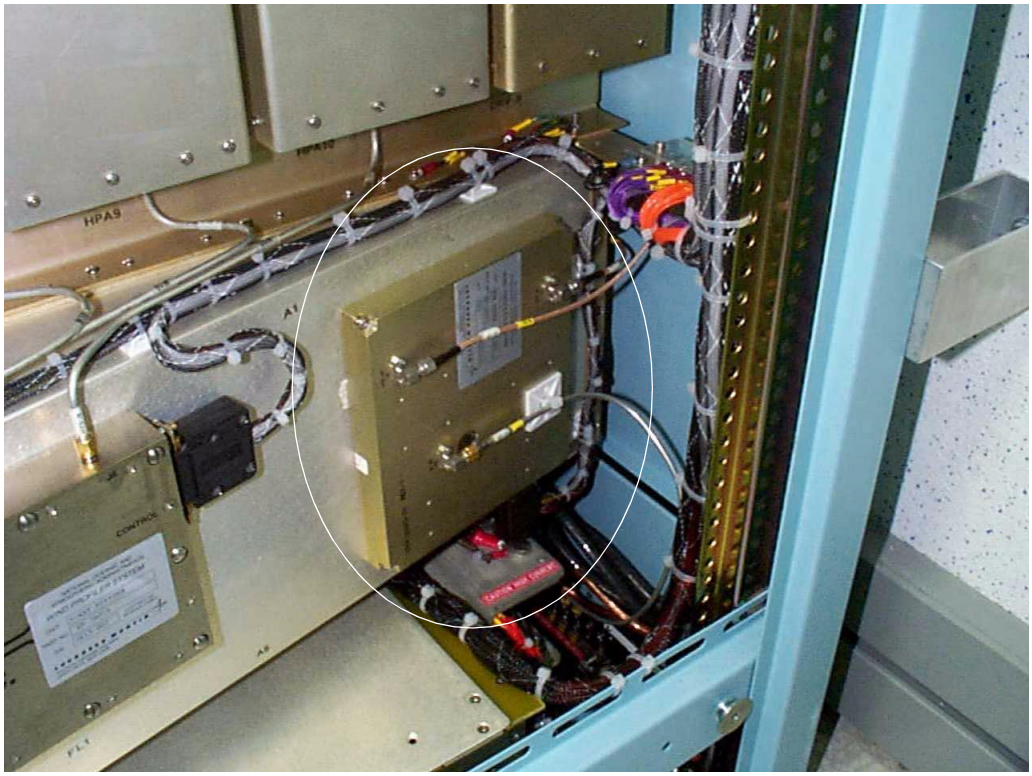

Figure 6-22 Driver Input Control Assembly

Internally, the DIC consists of components described in the bullets below. Refer to Figure 6-23 and Figure 6-24 for DIC internal layout and schematic diagrams.

- A directional coupler with amplification circuitry provides the ability to monitor the forward and reflected power at the DIC input J3.
- A SPST coaxial switch provides the ability to route the RF input signal to output J1 or J2.
- Two circulators at the outputs J1 and J2 couple the DIC with the two driver amplifier assemblies, and shunt any reflected power emitted from the drivers into internal 50 ohm loads.

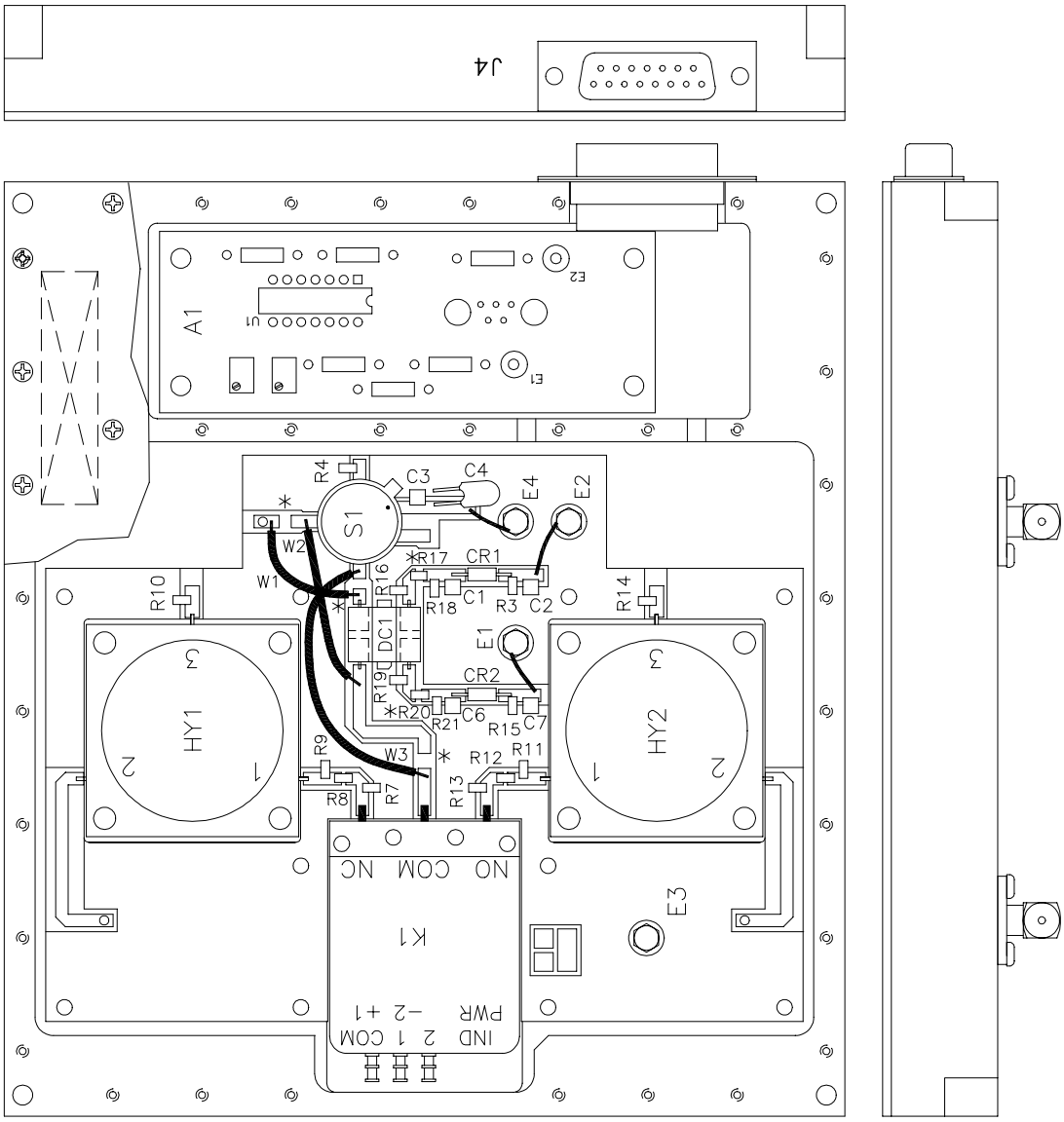

Figure 6-23 Driver Input Control Assembly Internal Component Layout

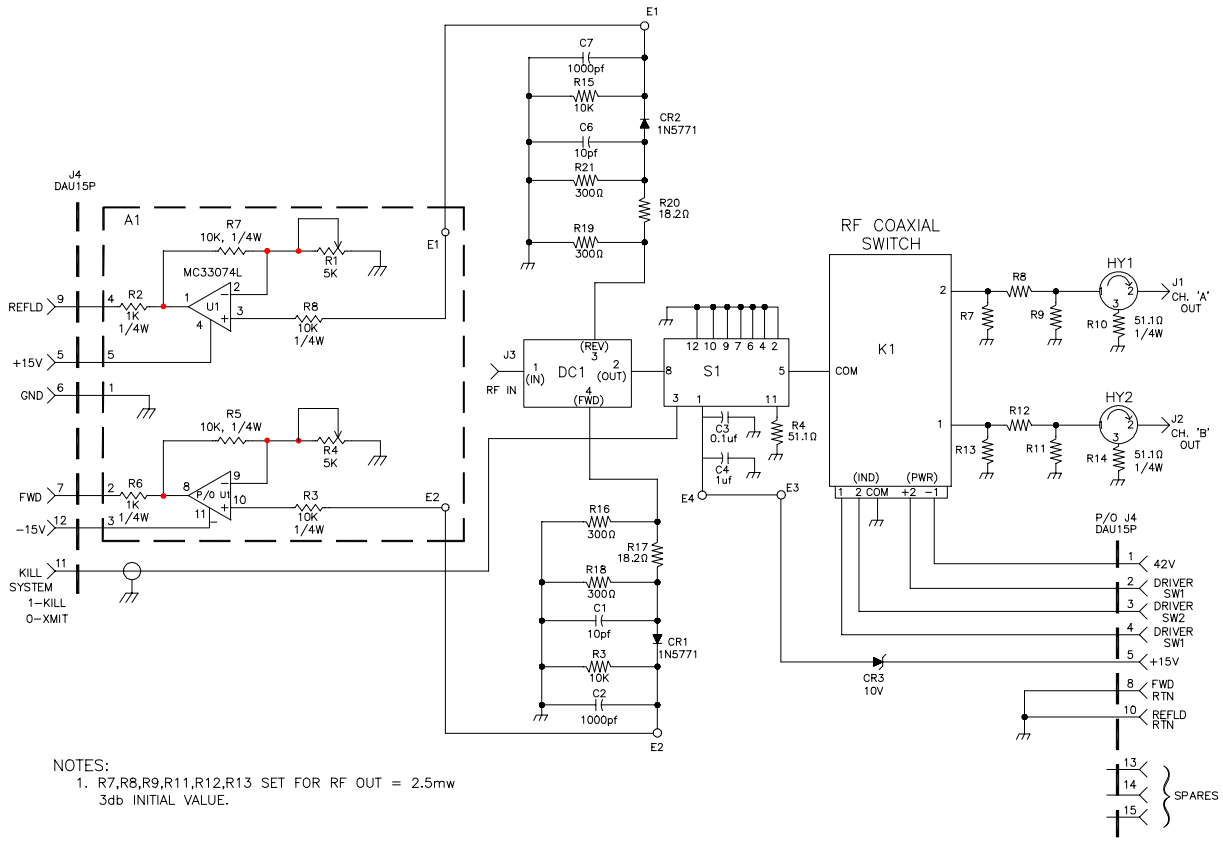

Figure 6-24 Driver Input Control Assembly Schematic Diagram

6.3.1 Replacement Procedure

1. Follow the standard power-down sequence described in Section 2.3

2. Remove right-side cabinet panel.

3. Disconnect mating connector of the corresponding cable harness from connector A1J4.

4. Disconnect RF cables W2, W3 and W4 from connectors A1J3, A1J1 and A1J2 respectively.

5. Support assembly A1 and unscrew four captive fasteners, and remove assembly A1from cabinet.

6. Connect the appropriate wire harness and RF cables to the replacement unit, but do not mount the assembly yet.

7. Refer to Section 6.17.2.1 “Driver Input Control Assembly Alignment” on page 6-73.

6.4 Driver Output Control Assembly

The Driver Output Control (DOC) Assembly, A2, controls the application of the RF output signal from the selected driver amplifier. The assembly is mounted on the rear chassis frame, located inside the amplifier cabinet assembly just above the exhaust cooling fans B4 through B6 (see Figure 6-25).

Internally, the DOC consists of components described in the bullets below. Refer to Figure 6-26 and Figure 6-27 for DOC internal layout and schematic diagrams.

Figure 6-25 Driver Output Control Assembly

- Two circulators at ports J1 and J2 couple the DOC with the two driver amplifier assembly outputs. The circulators shunt any reflected power entering port J3 into internal 50 ohm loads.

- A directional coupler with amplification circuitry provides the ability to monitor the forward and reflected power at the outputs of driver A or driver B.

- A SPST coaxial switch provides the ability to route the driver amplifier RF output signal from ports J1 or J2 to J3.

6.4.1 Replacement Procedure

1. Follow the standard power-down sequence described in Section 2.3

2. Remove left-side cabinet panel.

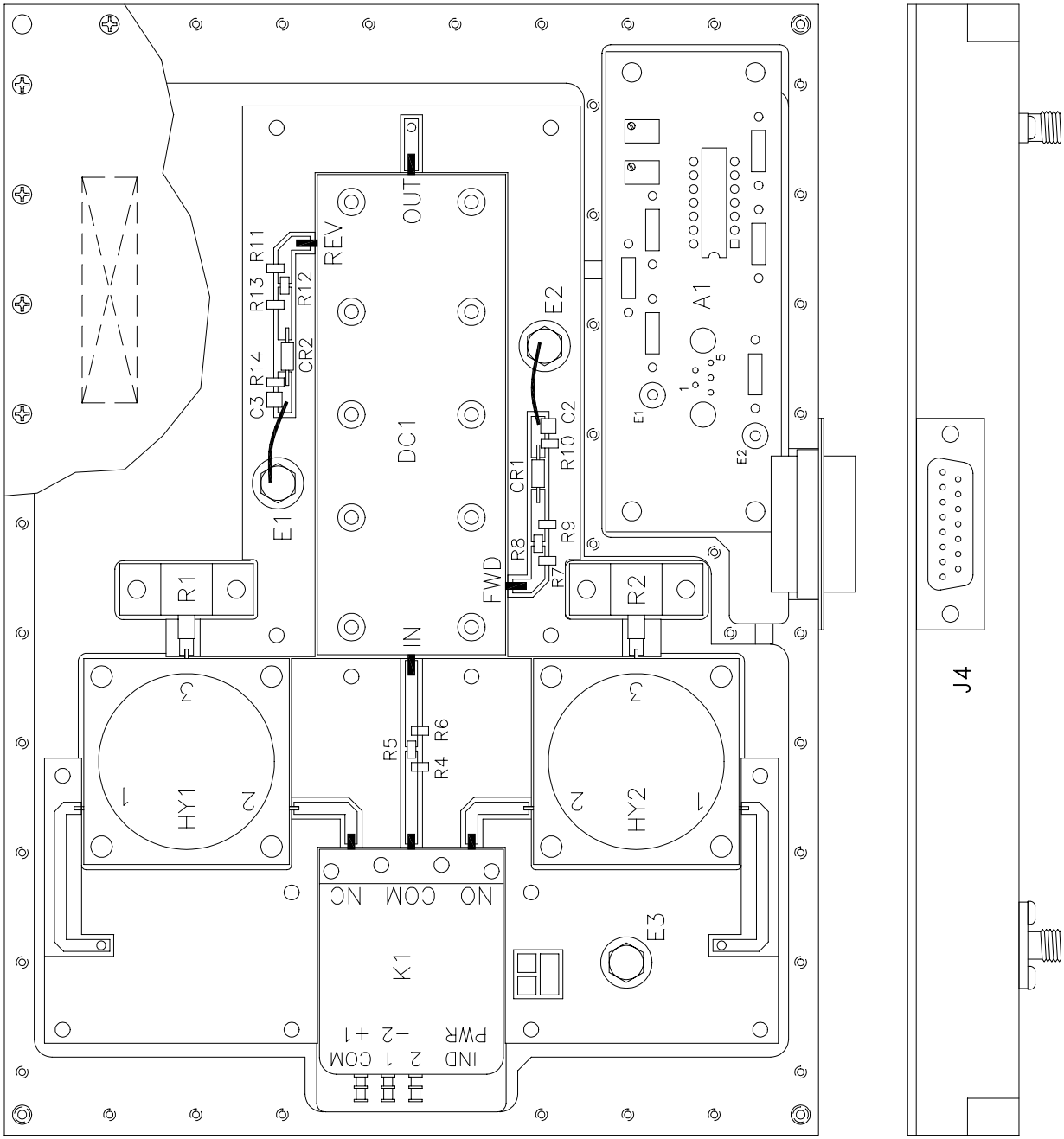

Figure 6-26 Driver Output Control Assembly Internal Component Layout

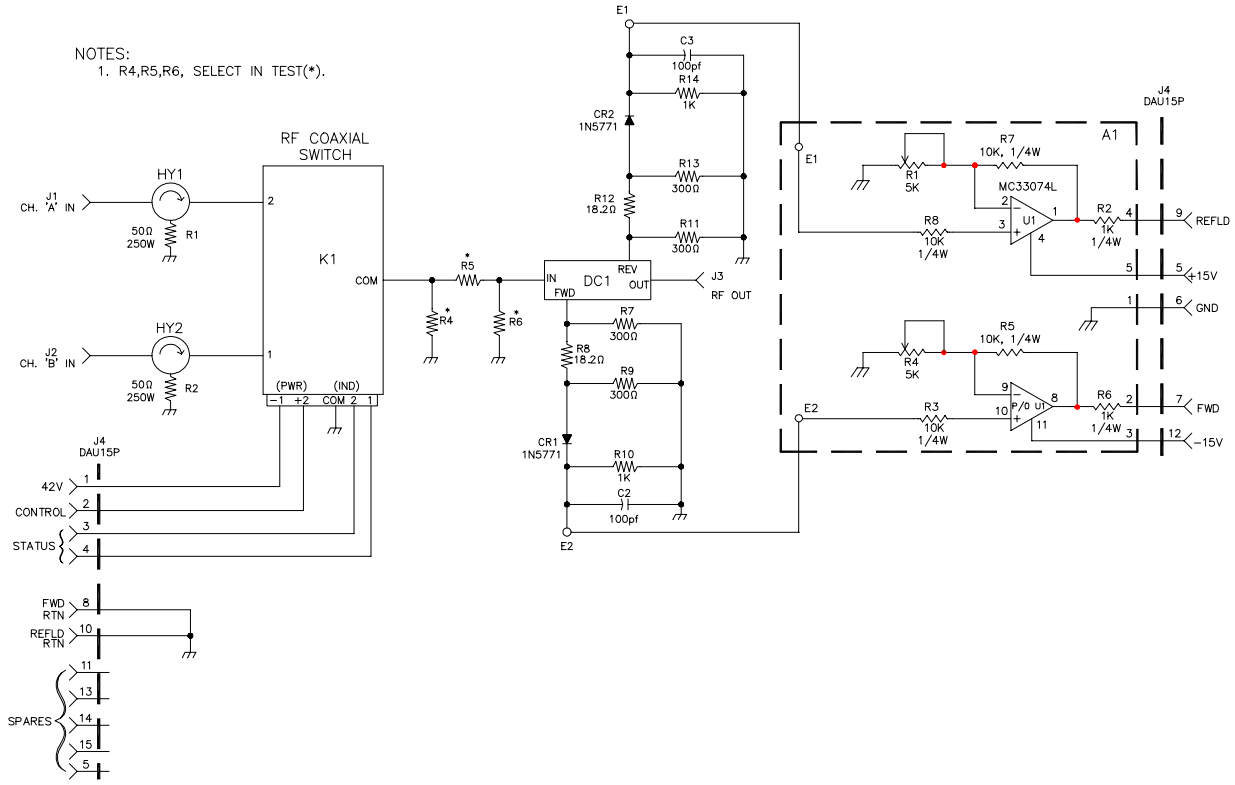

Figure 6-27 Driver Output Control Assembly Schematic Diagram

3. Disconnect mating connector of the corresponding cable harness from connector A2-J4.

4. Disconnect RF cables W5, W6 and W7 from connectors A2-J3, A2-J1 and A2-J2 respectively.

5. Support assembly A2, unscrew four captive fasteners, and remove assembly A2 with captive fasteners from cabinet.

6. Connect the appropriate wire harness and RF cables to the replacement unit, but do not mount the assembly yet.

7. Refer to Section 6.17.2.3 “Driver Control Output Assembly Alignment” on page 6-76.

6.5 Driver Amplifier Assemblies

The driver amplifier module assemblies *DRVR A* or *DRVR B* are identical self-contained amplifier modules arranged in redundant configuration. Only one driver is used at a time to provide the initial amplification of the RF input signal for the system. Both driver amplifiers are located inside the power amplifier cabinet assembly mounted on the rear of the center module support as shown in Figure 6-28. *DRVR A* is on the left side, and *DRVR B* is on the right side. Figure 6-29 is a drawing of typical driver module assembly, note that all interface connectors are located on the side of the module.

The typical peak output power of a driver assembly is approximately 700 Watts, each driver assembly has internal detector circuitry (see Figure 6-30) that samples the driver's output power. The SCMI uses this detector to identify driver failures. *DRVR A* functions as the primary unit and *DRVR B* functions as a back-up. If the power amplifier is running using *DRVR A*, and *DRVR A* fails, the SCMI will detect the failure and command the Driver Control Assemblies to switch to *DRVR B*. If the power amplifier is using *DRVR B*, and *DRVR B* fails, the power amplifier will shut down. The SCMI will not switch from *DRVR B* back to *DRVR A* automatically. Driver resets this must be done locally using the SCMI front panel controls, or remotely using the Profiler Maintenance Terminal (PMT) to issue a *driver reset* command.

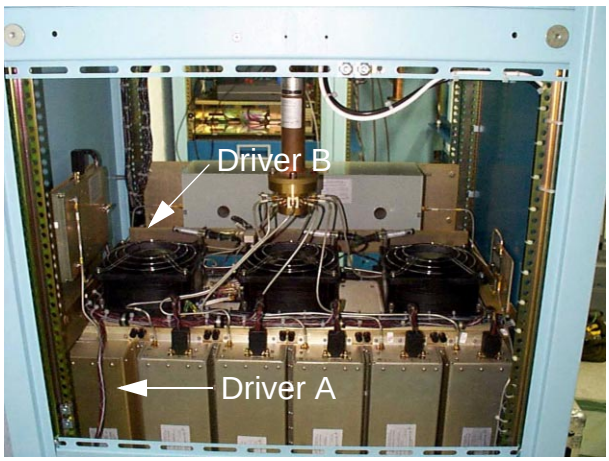

Figure 6-28 Driver Assembly Locations

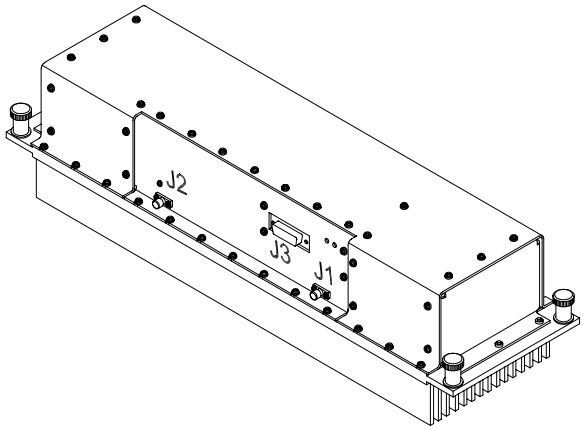

Figure 6-29 Driver Module Assembly

6.5.1 Driver A Replacement Procedure

1. Follow the standard power-down sequence described in Section 2.3

2. Remove left-side cabinet panel.

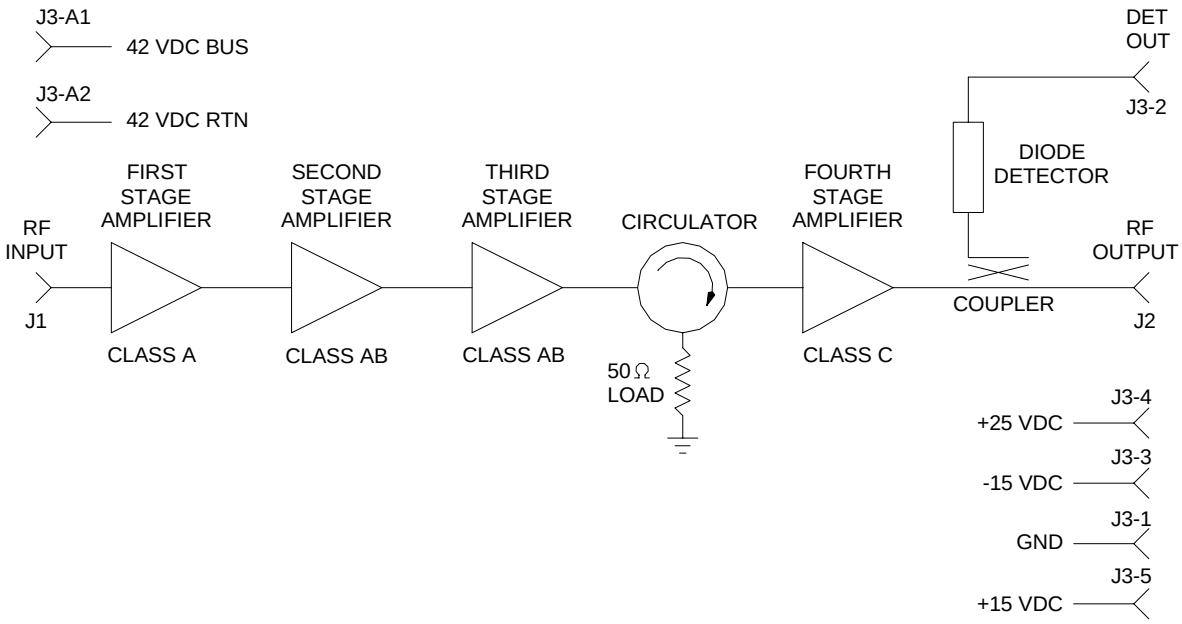

Figure 6-30 Driver Module Assembly Block Diagram

3. Remove high power amplifier assembly HPA 1 (see Section 6.6 "High Power Amplifier (HPA) Modules" on page 6-41).

4. Disconnect RF cables W3 and W5 from connectors J1 and J2 respectively.

5. Support driver assembly and unscrew four captive fasteners.

6. Carefully slide driver assembly to the right (forward).

7. Disconnect mating connector of the corresponding cable harness from connector J3.

8. Remove driver assembly DRVR A with captive fasteners from cabinet.

9. Place replacement driver assembly DRVR on mounting plate.

10. Connect mating connector of the corresponding cable harness to connector J3.

11. Carefully slide driver assembly DRVR A to the left (rear) and secure to plate with four captive fasteners.

12. Connect RF cables W3 and W5 to connectors J1 and J2 respectively.

13. Install high power amplifier assembly HPA 1 (see Section 6.6 "High Power Amplifier (HPA) Modules" on page 6-41).

14. Refer to Section 6.17.2.2 "Driver Amplifier Alignment" on page 6-75 for alignment procedures and Section 6.17 "Power Amplifier Performance Checks and Alignment Procedures" on page 6-68 for performance checks.

6.5.2 Driver B Replacement Procedure

1. Follow the standard power-down sequence described in Section 2.3

2. Remove right-side cabinet panel.

3. Remove high power amplifier assembly HPA 10 (see Section 6.6 "High Power Amplifier (HPA) Modules" on page 6-41).

4. Disconnect RF cables W4 and W6 from connectors J1 and J2 respectively.

5. Support driver assembly and unscrew four captive fasteners.

6. Carefully slide driver assembly to the left (forward).

7. Disconnect mating connector of the corresponding cable harness from connector J3.

8. Remove driver assembly DRVR B with captive fasteners from cabinet.

9. Place replacement driver assembly DRVR on mounting plate.

10. Connect mating connector of the corresponding cable harness to connector J3.

11. Carefully slide driver assembly DRVR B to the right (rear) and secure to plate with four captive fasteners.

12. Connect RF cables W4 and W6 to connectors J1 and J2 respectively.

13. Install high power amplifier assembly HPA 10 (see Section 6.6 "High Power Amplifier (HPA) Modules" on page 6-41).

14. Refer to Section 6.17.2.2 "Driver Amplifier Alignment" on page 6-75 for alignment procedures and Section 6.17 "Power Amplifier Performance Checks and Alignment Procedures" on page 6-68 for performance checks.

6.6 High Power Amplifier (HPA) Modules

The ten high power amplifier (HPA) assemblies are identical self-contained amplifier modules located inside the power amplifier cabinet assembly mounted to the center module support as shown in Figures 6-31 through 6-33. HPA 1 through HPA 5 are mounted on the left side of the cabinet, and HPA 6 through HPA 10 are mounted on the right side of the cabinet. Figure 6-34 is a drawing of a typical PA module as it would look when removed from the module support bracket.

The typical peak output power of an HPA module assembly is approximately 1.7 KW, each HPA module assembly has internal detector circuitry (see Figure 6-35) that samples the HPAs output power. The SCMI uses this detector identify HPA failures.

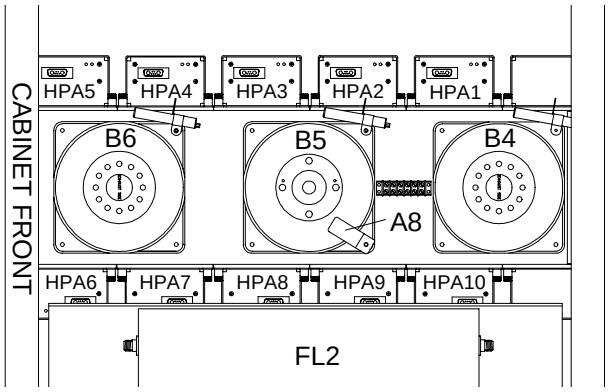

Figure 6-31 HPA Module Location

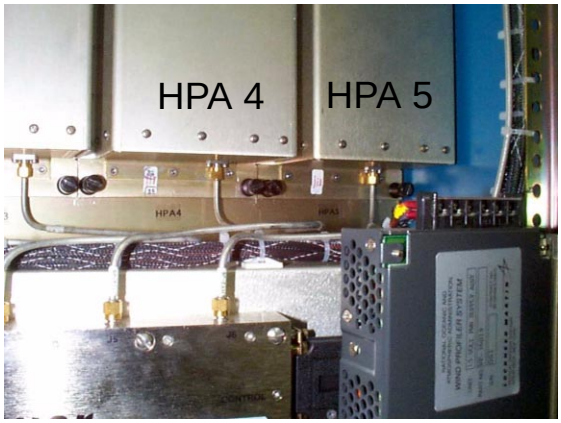

Figure 6-32 Bottom View HPA Module

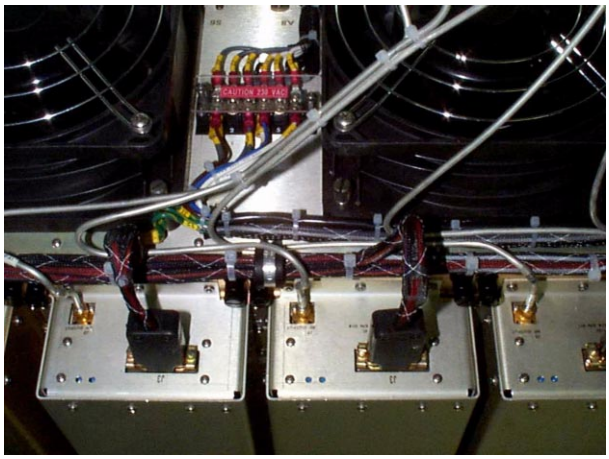

Figure 6-33 Top View of HPA Module

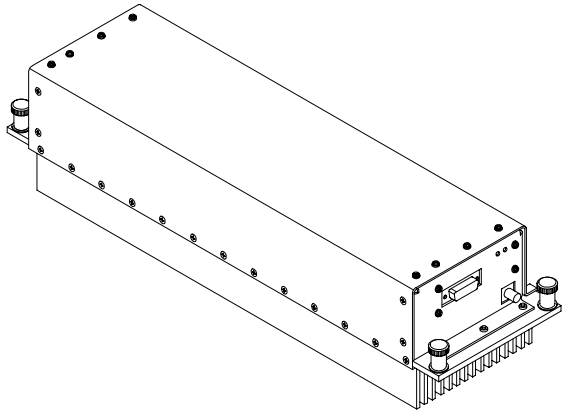

Figure 6-34 Typical HPA Module

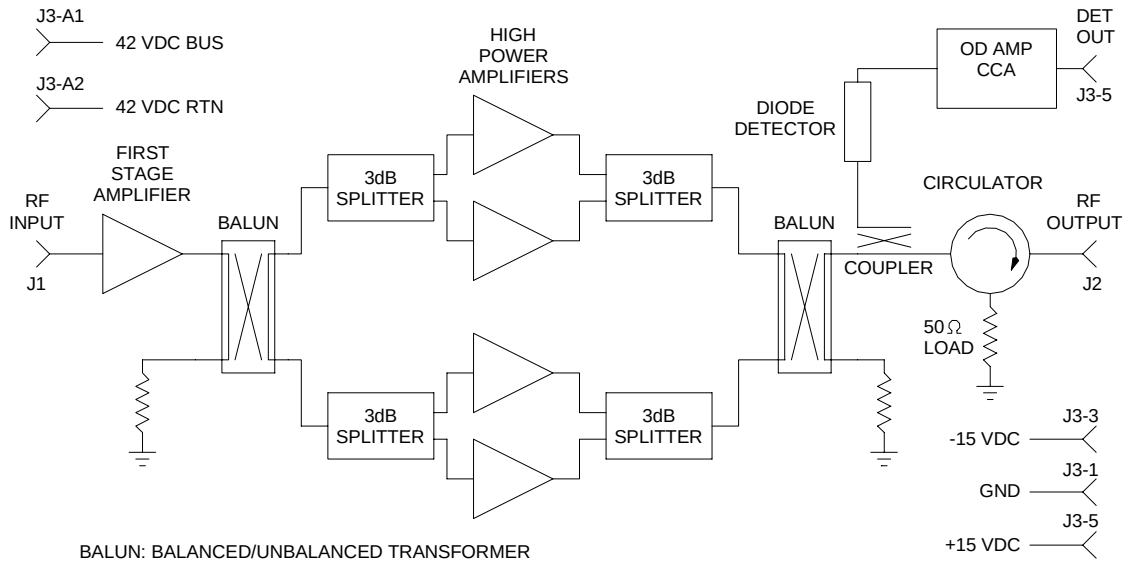

Figure 6-35 HPA Module Block Diagram

6.6.1 HPA 1 - 5 Replacement Procedures

1. Follow the standard power-down sequence described in Section 2.3.

2. Remove left-side cabinet panel.

> ***** NOTE*****
> HPA Module assemblies are arranged from left to right (rear to forward) starting with HPA 1.

3. Disconnect RF cables (input and output) from the connectors of the HPA assembly to be removed.

4. Disconnect mating connector of the corresponding cable harness from connector J3 of the HPA assembly to be removed.

5. Support the HPA assembly to be removed and unscrew the four captive fasteners securing it to the mounting plate.

6. Remove the HPA assembly with captive fasteners from cabinet.

7. Install replacement HPA assembly on mounting plate and secure with four captive fasteners.

8. Connect the appropriate wire harness and RF cables.

9. Perform the alignment procedure in Section 6.17.2.4 "HPA Module Alignment" on page 6-78. For General performance checks refer to Section 6.17 "Power Amplifier Performance Checks and Alignment Procedures" on page 6-68.

6.6.2 HPA 6 -10 Replacement Procedures

1. Follow the standard power-down sequence described in Section 2.3.

2. Remove right-side cabinet panel.

***** NOTE*****

HPA Module assemblies are arranged from left to right (forward to rear) starting with HPA 6.

3. Disconnect RF cables (input and output) from the connectors of the HPA assembly to be removed.

4. Disconnect mating connector of the corresponding cable harness from connector J3 of the HPA assembly to be removed.

5. Support the HPA assembly to be removed and unscrew the four captive fasteners securing it to the mounting plate.

6. Remove the HPA assembly with captive fasteners from cabinet.

7. Install replacement HPA assembly on mounting plate and secure with four captive fasteners

8. Connect the appropriate wire harness and RF cables.

9. Perform the alignment procedure in Section 6.17.2.4 "HPA Module Alignment" on page 6-78. For General performance checks refer to Section 6.17 "Power Amplifier Performance Checks and Alignment Procedures" on page 6-68.

6.7 Band Pass Filter Assembly

The 449 MHz band pass filter assembly FL2 is a passive device with Chebychev filter characteristics. The function of the filter is to provide the primary pulse shaping of the RF signal for out-of-band emissions per RSEC Criteria E spectrum control. Assembly FL2 is mounted to a shelf support located inside the power amplifier cabinet assembly (see Figure 6-36). Access to assembly FL2 is made from the right-side cover panel of the power amplifier cabinet assembly.

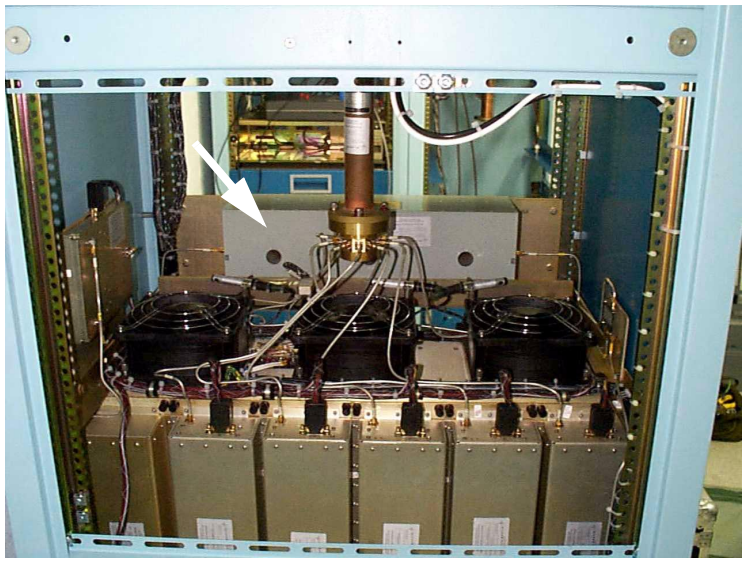

Figure 6-36 Band Pass Filter Assembly

6.7.1 Replacement Procedure

1. Follow the standard power-down sequence described in Section 2.3.
2. Remove right-side cabinet panel.
3. Disconnect RF cables W7 and W8 from connectors FL2J1 and FL2J2 respectively.
4. Unscrew four bolts securing FL2 to mounting plate and remove assembly FL2 from cabinet.
5. Install replacement assembly FL2 by securing to mounting plate with four bolts.
6. Connect RF W7 and W8 to connectors FL2J1 and FL2J2 respectively.
7. Install right-side cabinet panel.
8. Follow the standard power-up sequence described in Section 2.4.

6.8 Attenuator Assemblies

The original power amplifier design is capable of generating 20 Kilowatts of peak power. It was determined that the Beam Steering Unit (BSU) Switches were incapable of withstanding this amount of peak power without eventually failing. As a result, the Attenuator Assemblies AT1, AT2, and AT3 were added to the transmitter to decrease the overall output level of the power amplifier.

6.8.1 One dB Attenuators

Attenuator assemblies AT1 and AT2 are 1-dB 1-Watt attenuators placed in-line at the two output ports (J1 and J2) of the Driver Input Control Assembly.

To replace an attenuator assembly, follow the standard power-down sequence in Section 2.3. Unscrew the SMA connectors, remove the failed unit, and install the replacement attenuator. Follow the standard power-up sequence in Section 2.4.

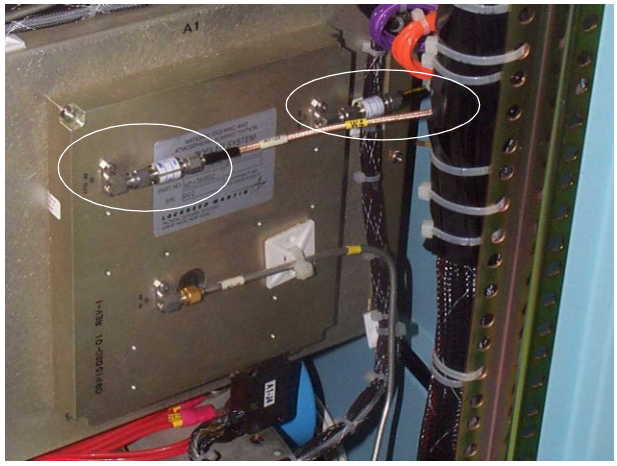

Figure 6-37 1-dB Attenuators

6.8.2 Two dB Attenuator

Attenuator assembly AT3 is a 2-dB 100 Watt attenuator placed in-line between the Band Pass Filter Assembly (FL2) and the Two-Way Power Divider Assembly (HY1). The attenuator is mounted directly above the Two-Way Power Divider Assembly (HY1) behind the cabinet front panel (see Figure 6-38).

To replace the attenuator assembly, follow the standard power-down sequence in Section 2.3. Unscrew the SMA connectors, remove the mounting hardware, remove the failed unit, and install the replacement attenuator. Follow the standard power-up sequence in Section 2.4.

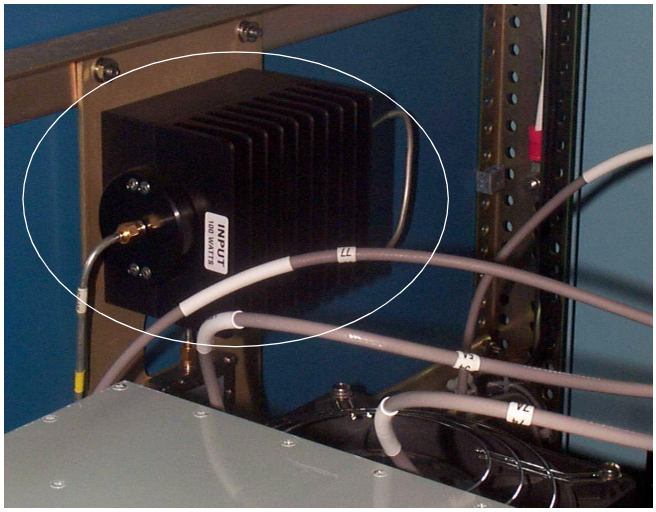

Figure 6-38 2-dB/100 Watt Attenuator

6.9 Two-Way Power Divider

The two-way divider HY1 consists of RF signal splitter circuits. It is located inside the power amplifier cabinet assembly mounted to the cabinet frame rail directly in front of exhaust fan B4 (see Figure 6-39). Access to assembly HY1 is made from the right-side cover panel of the power amplifier cabinet assembly.

To replace the divider, follow the standard power-down sequence in Section 2.3. Unscrew the SMA connectors, remove the mounting hardware, remove the failed unit, and install the replacement attenuator. Follow the standard power-up sequence in Section 2.4.

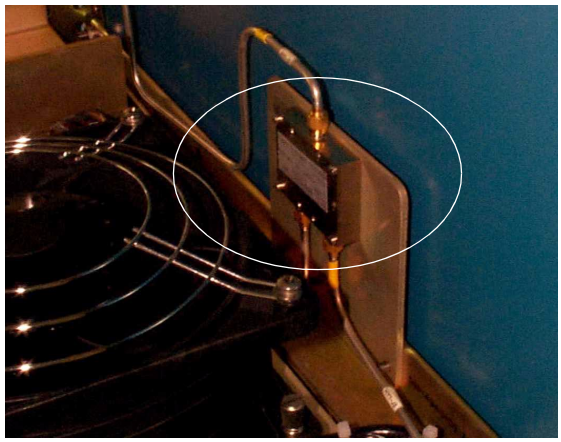

Figure 6-39 2-Way Power Divider

6.10 5-Way Power Dividers

The five-way dividers HY2 and HY3 are identical self-contained units which further divide the RF signal for application to the associated high power amplifiers. Assembly HY2 is mounted on the left side of the air intake plenum as shown in Figure 6-40. Assembly HY3 is mounted on the right side of the air intake plenum as shown in Figure 6-41. Each 5-Way divider has five internal coaxial switches used to enable/disable individual HPA modules. Refer to Figure 6-42 for a block diagram of a 5-Way Power Divider.

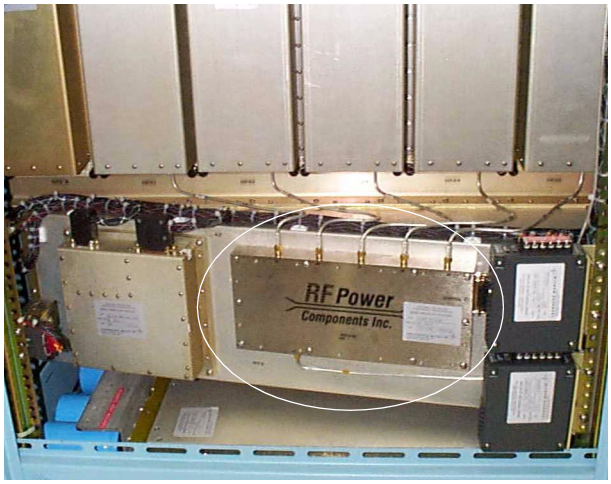

Figure 6-40 5-Way Power Divider HY2

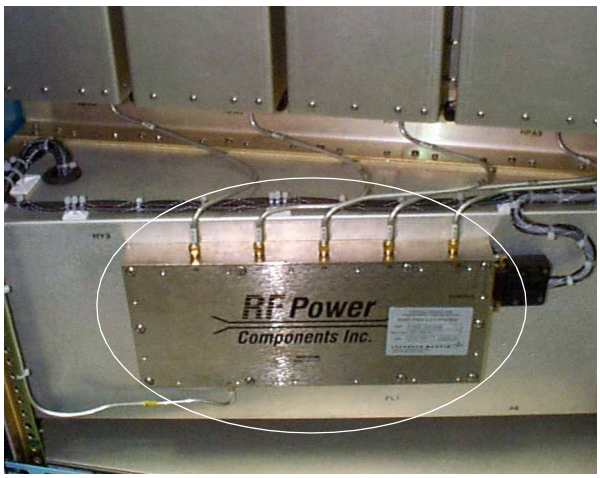

Figure 6-41 5-Way Power Divider HY3

To Be Determined

Figure 6-42 5-Way Power Divider Block/Schematic Diagram

6.10.1 HY2 Replacement Procedure

1. Follow the standard power-down sequence defined in Section 2.3.

2. Remove left-side cabinet panel.

3. Disconnect RF cables W9, W11, W12, W13, W14, and W15 from connectors J1 through J6 respectively.

4. Disconnect mating connector of the corresponding cable harness from connector J7 of assembly HY2.

5. Support assembly HY2 and unscrew the ten captive fasteners securing it to the mounting plate.

6. Remove assembly HY2 with captive fasteners from cabinet.

7. Install replacement assembly HY2 on mounting plate and secure with ten captive fasteners

8. Connect the appropriate wire harness and RF cables.

9. Install left-side cabinet panel.

10. Follow the standard power-up sequence defined in Section 2.4.

6.10.2 HY3 Replacement Procedure

1. Follow the standard power-down sequence defined in Section 2.3.

2. Remove right-side cabinet panel.

3. Disconnect RF cables W10, W16, W17, W18, W19, and W20 from connectors J1 through J6 respectively.

4. Disconnect mating connector of the corresponding cable harness from connector J7 of assembly HY3.

5. Support assembly HY3 and unscrew the ten captive fasteners securing it to the mounting plate.

6. Remove assembly HY3 with captive fasteners from cabinet.

7. Install replacement assembly HY3 on mounting plate and secure with ten captive fasteners

8. Connect the appropriate wire harness and RF cables.

9. Install right-side cabinet panel.

10. Follow the standard power-up sequence defined in Section 2.4.

6.11 42 VDC Power Supplies

The power supply assemblies PS1 through PS4 are located inside the 23-inch rack chassis for 42V power supply assembly A6 at the bottom front of the cabinet (see Figure 6-43). The power supplies operate in a N+1 parallel redundant configuration. Each unit is rated at 2730 watts output at 65 amperes, maximum. Each power supply is 7 inches high, 5.25 inches wide, and 18 inches long (see Figure 6-44). The power supplies are mounted side by side into assembly A6 and can be individually removed by carefully pulling the module from assembly A6.

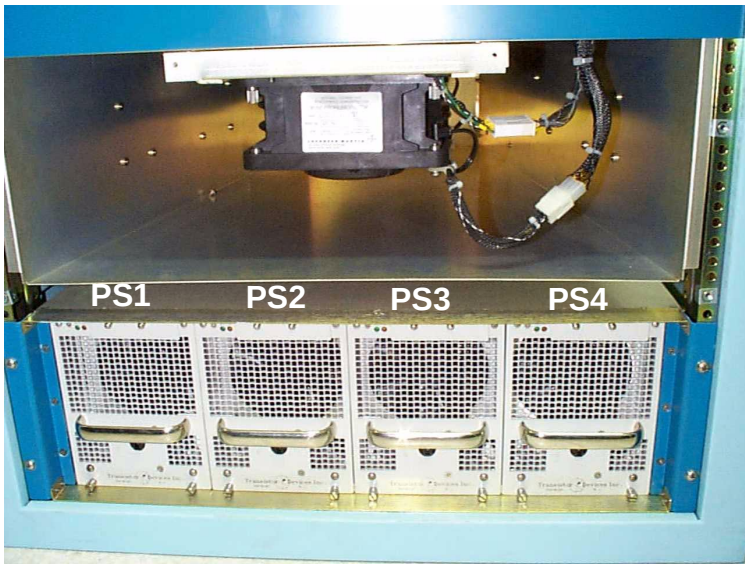

Figure 6-43 42 VDC Power Supply Locations

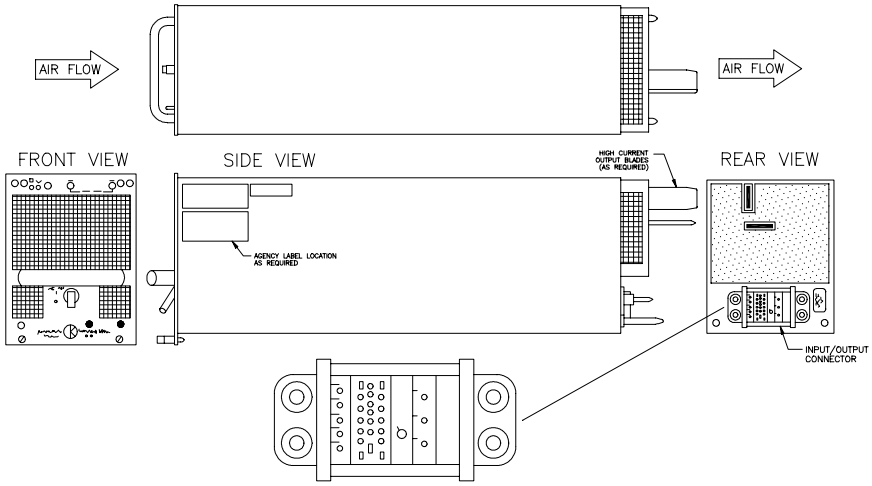

CONNECTOR PIN DESCRIPTION CHART			
1	A.C.	16	INHIBIT RTN
2	NOT USED	17	NOT USED
3	A.C.	18	NOT USED
4	CHASSIS GND	19	OVER TEMP
5	SUM FLT	20	NOT USED
6	NOT USED	21	NOT USED
7	AC FAIL	22	SYNC
8	NOT USED	23	NOT USED
9	OVER CURRENT	24	NOT USED
10	INHIBIT	25	NOT USED
11	RTN SENSE	26	NOT USED
12	5V PULL UP	27	NOT USED
13	NOT USED	28	NOT USED
14	FLT COMMON	29	NOT USED
15	OUTPUT SENSE	MATING CONNECTOR: P/N C12147B-2	

Figure 6-44 42 VDC Power Supply Connector Specifications

6.11.1 Replacement Procedure

1. Unscrew the four captive fasteners securing the front lower vent panel and filter to cabinet.

2. Remove the front lower vent panel and filter from cabinet.

3. Unscrew the two captive fasteners securing the power supply assembly to be removed to power supply chassis assembly A6.

4. Slide power supply assembly from chassis assembly A6 as shown in Figure 6-45, and remove unit with captive fasteners from cabinet.

5. Install replacement power supply assembly by sliding unit into cabinet until the rear face of the front panel contacts the mounting angle of the power supply chassis assembly A6.

6. Secure the power supply to the chassis assembly A6 with two captive fasteners.

7. Install front lower vent panel and filter to cabinet and secure with the four captive fasteners.

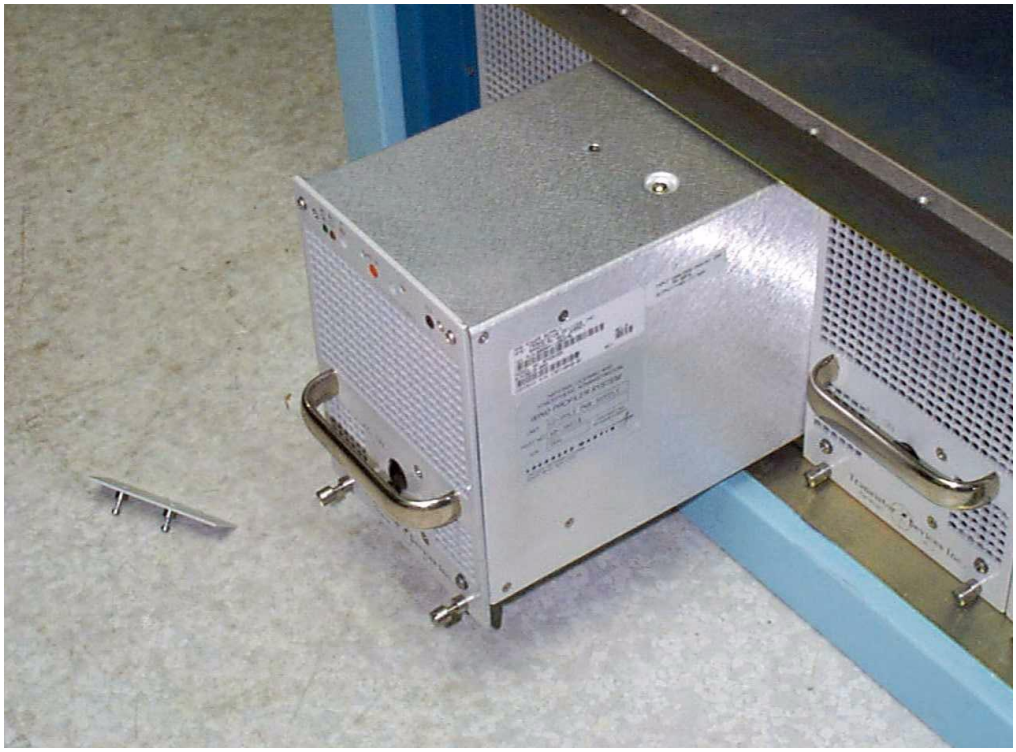

Figure 6-45 42 VDC Power Supply Removal / Replacement

6.12 15 VDC Power Supplies

The 15-volt power supply assemblies PS5 and PS6 are identical self-contained AC to DC switching power supplies. Each unit is attached with a mounting bracket to the left-side front cabinet frame rail just above the 23-inch rack chassis for 42V power supply assembly A6 (see Figure 6-46). Access to assemblies PS5 and PS6 is made from the left-side cover panel of the power amplifier cabinet assembly.

Figure 6-46 PS5 & PS6 Locations

The outputs of PS5 and PS6 are fed into the Voltage Monitor Assembly (A3). Assembly A3 contains two high current diodes that “OR” the two 15V power supplies together. The Voltage Monitor Assembly is the distribution source for the 15 VDC power supplies

6.12.1 Replacement Procedure

1. Follow the standard power-down sequence defined in Section 2.3.

2. Remove left-side cabinet panel.

3. Disconnect cable harness corresponding to assembly to be removed from associated terminal board connector.

4. Support assembly to be removed and unscrew the two captive fasteners securing it to the mounting plate.

5. Install replacement power supply assembly on mounting plate and secure with two captive fasteners.

6. Connect the appropriate wire harness to the associated terminal board connector.

7. Install left-side cabinet panel.

8. Follow the standard power-up sequence defined in Section 2.4.

6.13 Voltage Monitor Assembly

The Voltage Monitor Assembly (VMA), A3, samples the AC line voltage and reports over/under voltage conditions to the SCMI. The VMA is mounted on the left side of the air intake plenum located inside the amplifier cabinet just above the 42-volt power supplies (see Figure 6-47).

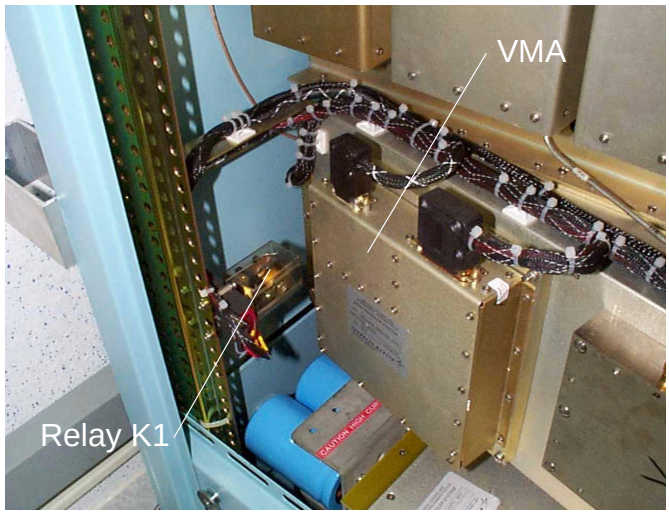

Figure 6-47 Voltage Monitor Assembly

Internally, the VMA has a self-contained 25 VDC power supply module which provides regulated voltage for the driver amplifiers (see Figure 6-48 and Figure 6-49). The VMA also provides the circuitry to “DIODE-OR” the two 15 VDC power supplies together, and distributes the 15 VDC operating voltages (see Figure 6-49).

6.13.1 Replacement Procedure

1. Follow the standard power-down sequence described in Section 2.3.
2. Remove left-side cabinet panel.
3. Disconnect mating connectors of the corresponding cable harness from ACIN connector A3J1 and V OUT connector A3J2.
4. Support assembly A3 and unscrew four captive fasteners.
5. Remove assembly A3 with captive fasteners from cabinet.
6. Install replacement assembly A3 by securing in place with four captive fasteners.
7. Connect the appropriate wire harnesses.
8. Install left-side cabinet panel.
9. Follow the standard power-up sequence defined in Section 2.4.

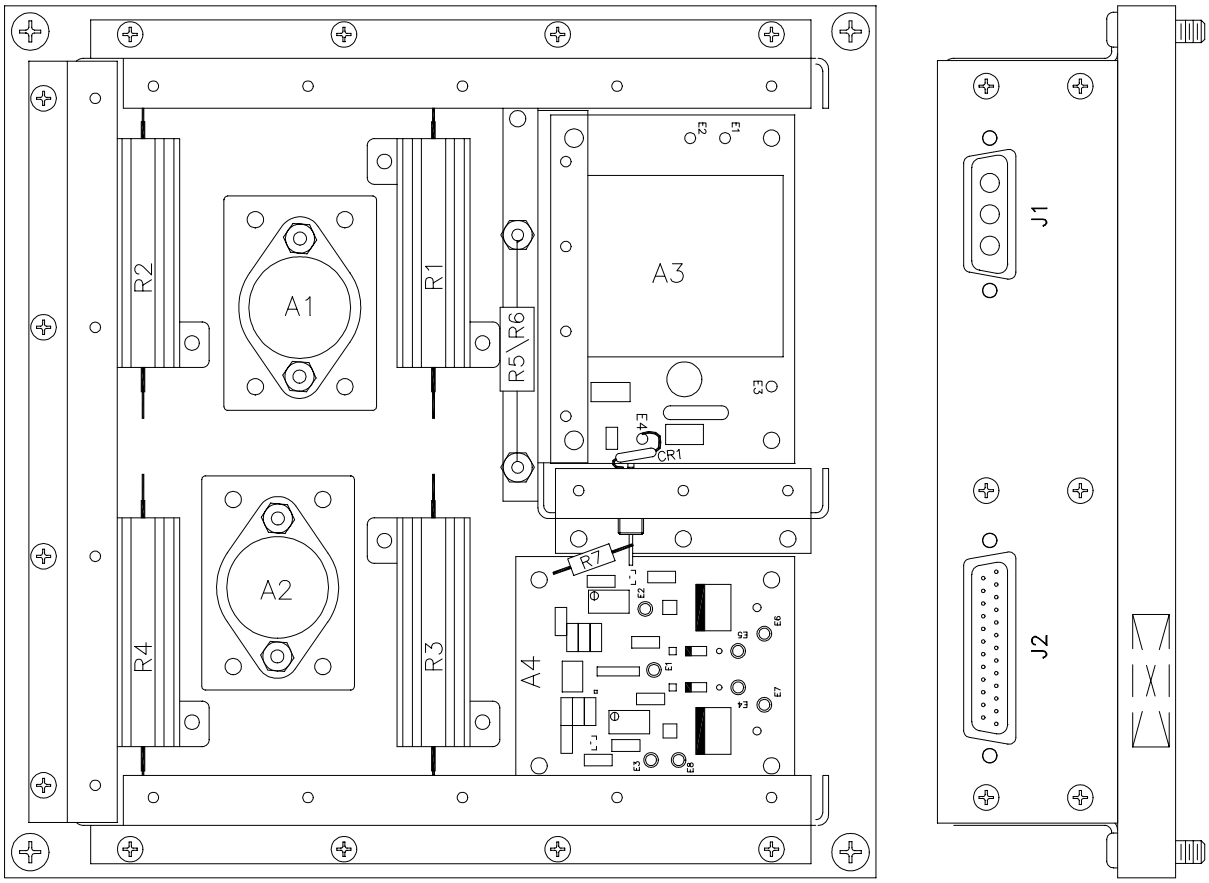

Figure 6-48 Voltage Monitor Assembly Internal Component Layout

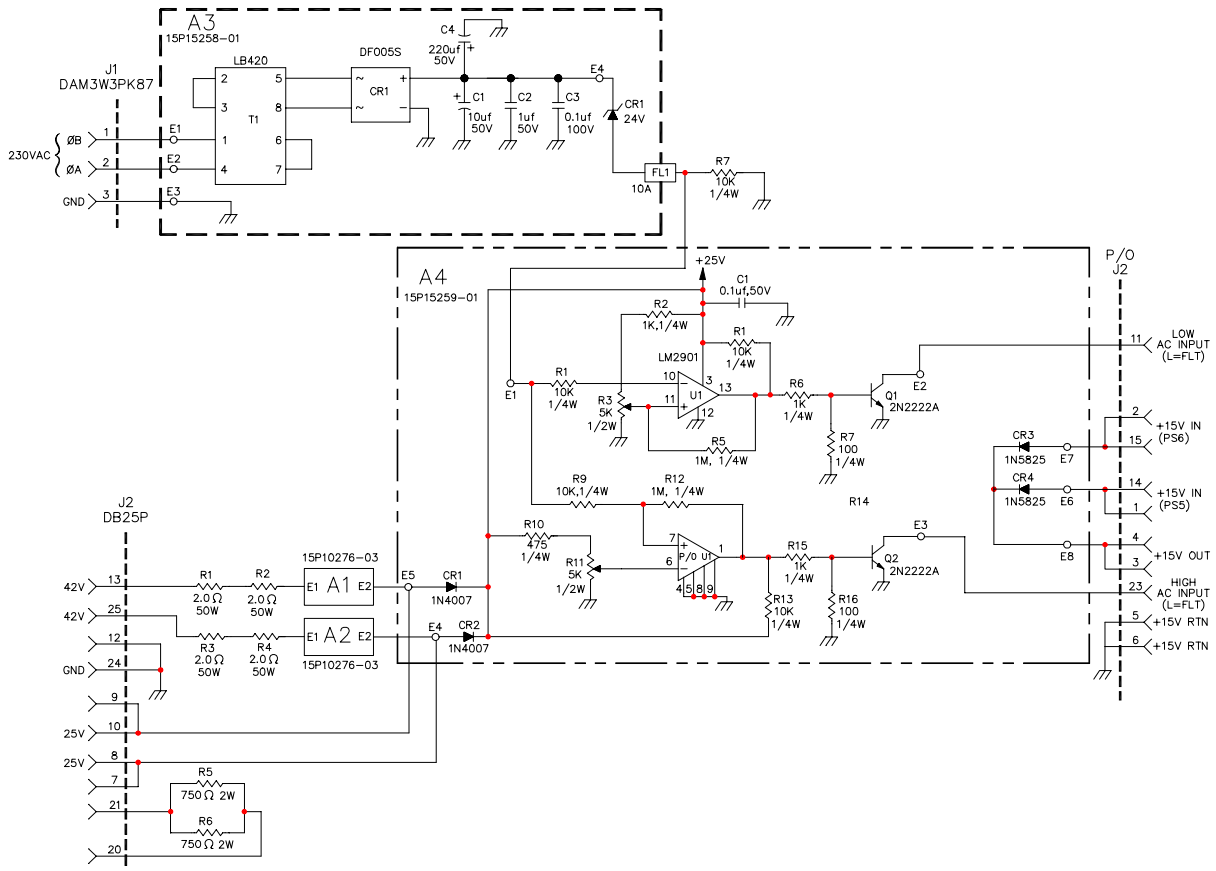

Figure 6-49 Voltage Monitor Assembly Schematic Diagram

6.14 Cooling Fan Assemblies

The cooling fan assemblies B1 through B6 are tube axial fans and are used to provide redundant forced air cooling for the power amplifier cabinet assembly. Fans B1 through B3 are used to pull external air into the air intake plenum, which is protected with a foam filter. These intake fans are located inside the fan drawer of the air intake plenum, which is just above the 23-inch rack chassis for 42V power supply assembly A6 (see Figure 6-50). Access to fans B1 through B3 is made from the front of the power amplifier cabinet assembly.

Fans B4, B5, and B6 are used to exhaust the internal cabinet air out of the power amplifier cabinet assembly through air exhaust grills located on the side cover panels. These exhaust fans are located inside the power amplifier cabinet assembly just above the high power amplifiers HPA 1 through HPA 10 (see Figure 6-51). Access to fans B4 through B6 is made from the left-side cover panel of the power amplifier cabinet assembly.

Figure 6-50 Intake Fans (B1-B3)

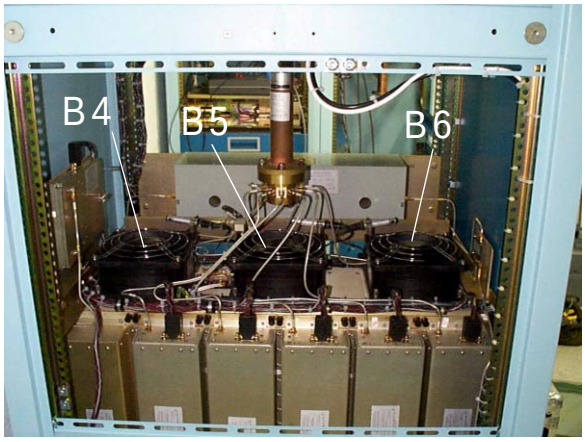

Figure 6-51 Exhaust Fans (B4-B6)

6.14.1 Intake Fan Assembly (B1-B3) Replacement Procedure

*****CAUTION*****
When replacing fan assemblies, use care not to change the alignment or orientation of fan vane assemblies S1 - S3. Refer to Figure 6-52 Image B.

1. Follow the standard power-down sequence described in Section 2.3.

2. Unscrew the four captive fasteners securing the front lower vent panel and filter to the cabinet.

3. Remove the front lower vent panel and air filter from the cabinet.

4. Unscrew the captive fasteners securing fan drawer to the plenum.

5. Disconnect the two wire harness connectors from mating connectors of the intake fan drawer assembly (see Figure 6-52A).

6. Carefully slide intake fan drawer assembly from cabinet.

7. Unscrew the fasteners that attach the wiring harness to the fan assembly to be replaced (see Figure 6-52C).

8. Unscrew the four captive fasteners securing the cooling fan assembly to be removed.

9. Disconnect power plug and remove fan assembly.

10. Install replacement cooling fan assembly onto intake fan drawer assembly and secure the cooling fan using the four captive fasteners.

11. Connect power plug to fan and fasten the wiring harness to the cooling fan.

12. Carefully slide intake fan drawer assembly into cabinet and secure with captive fasteners.

13. Connect the two wire harness connectors to mating connectors of intake fan drawer assembly.

14. Install front lower vent panel and air filter to cabinet and secure with the four captive fasteners.

15. Follow the standard power-up sequence defined in Section 2.4.

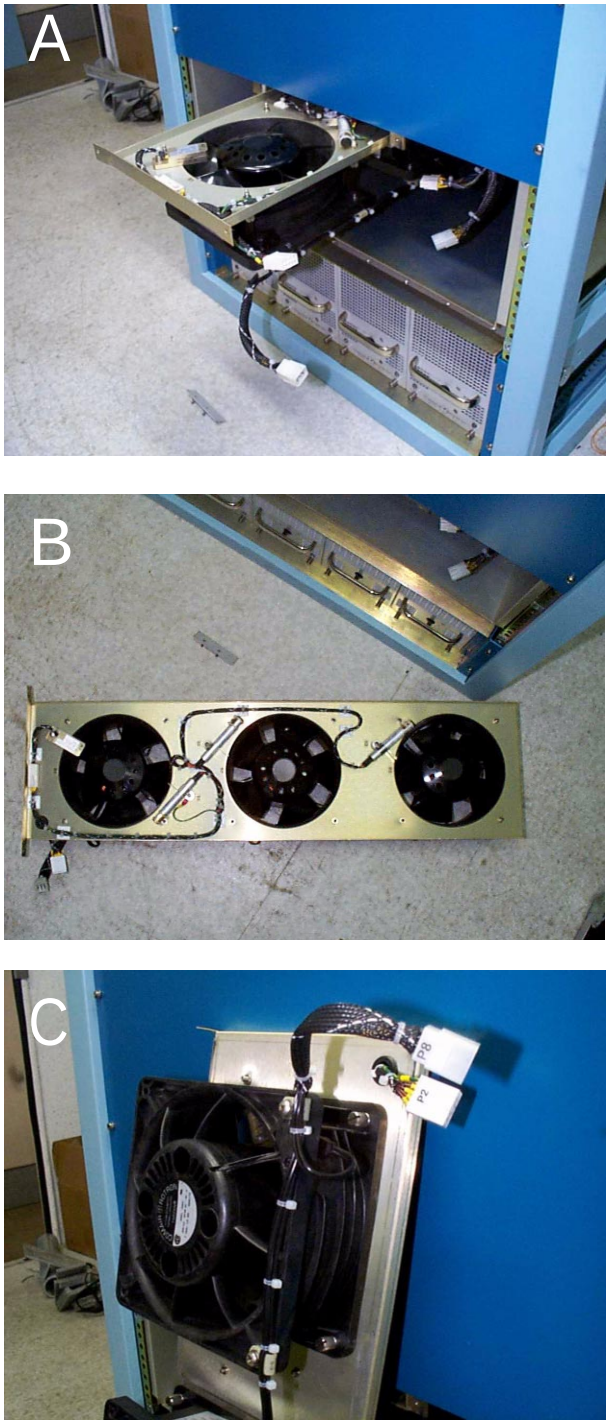

Figure 6-52 Intake Fan Replacement

6.14.2 Exhaust Fan Assembly (B4-B6) Replacement Procedure

*****NOTE*****

Prior to replacement of fan assembly B4, B5, or B6, note the exact position and orientation of the associated fan vane assembly (S4, S5, or S6). Improperly positioned fan vanes will cause false fan failures to be detected by the SCMI. Refer to Figure 6-53.

1. Follow the standard power-down sequence described in Section 2.3.

2. Remove left-side cabinet panel.

3. Unscrew the captive fastener securing the switch vane assembly to the cooling fan.

4. Unscrew the four captive fasteners securing the cooling fan assembly to be removed.

5. Disconnect power plug and remove fan assembly.

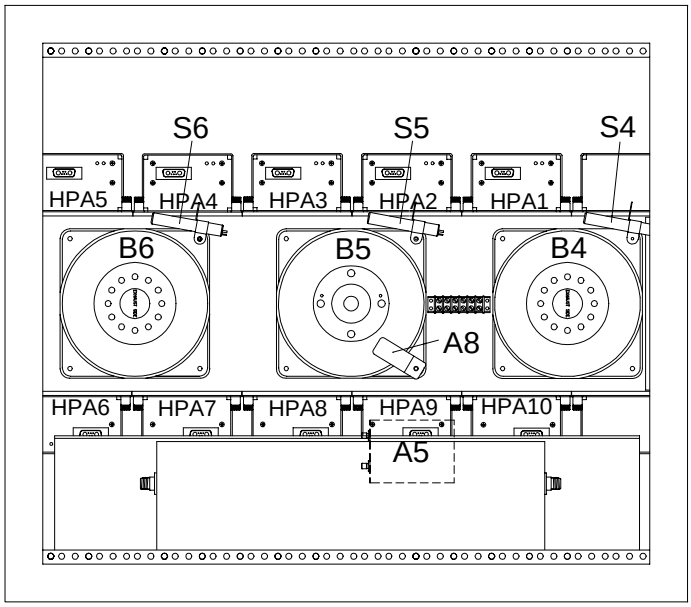

Figure 6-53 Fan B4-B6 Replacement

6. Install replacement cooling fan assembly and secure with four captive fasteners.

7. Connect power plug to fan.

8. Carefully reposition the switch vane assembly, and secure with captive fastener.

9. Install left-side cabinet panel.

10. Follow the standard power-up sequence defined in Section 2.4.

6.15 Temperature Monitoring

The SCMI assembly continuously monitors eight (8) temperature sensor. Six (6) of the sensors are used to monitor the six cooling fans for failures. The remaining two sensors, monitor the overall intake and exhaust air temperatures in the power amplifier cabinet to protect the amplifier from being damaged from over-temperature.

6.15.1 Fan Assembly Monitoring

The solid-state switch vane assemblies S1 through S6 are identical and are used to monitor the operation of cooling fans B1 through B6 by sensing the air flow activity from the associated fan. Each switch vane is modified to block 1/2 of the sensor porthole, using a plastic patch and two tie wraps as shown in Figure 6-54. There is one switch vane for each fan. The location of each switch vane is critical for proper operation. If replacement of a switch vane is necessary, the exact location on the fan assembly must be noted and recorded before removing it from the fan. The replacement switch vane must be installed in the exact location.

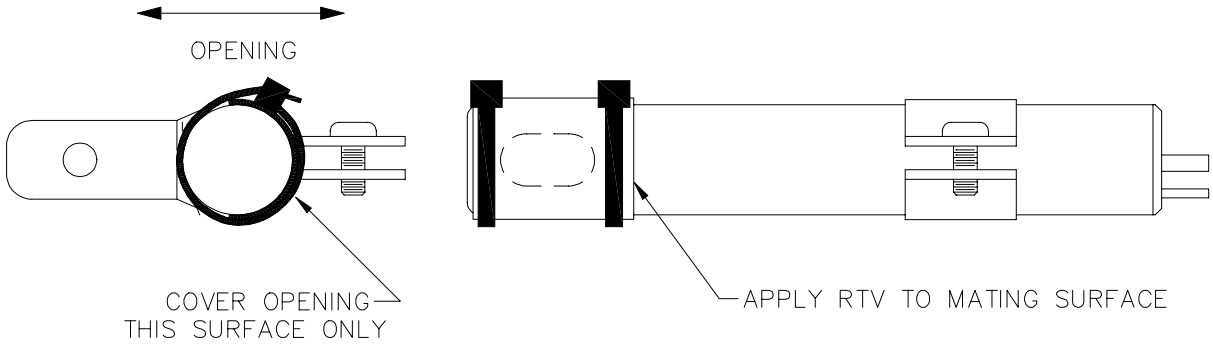

Figure 6-54 Modified Solid-state Switch Vane Assembly

Switch vane assemblies S1 through S3 are mounted on top of intake fans B1 through B3, which are located inside the fan drawer of the air intake plenum just above the 23-inch rack chassis for 42V power supplies, assembly A6. Access to assemblies S1 through S3 is made from the front of the power amplifier cabinet assembly by sliding out the intake fan drawer inside the cabinet. Switch vane assemblies S4 through S6 are mounted on top of exhaust fans B4 through B6, which are located inside the power amplifier cabinet assembly. Access to assemblies S4 through S6 is made from the left-side cover panel of the power amplifier cabinet assembly.

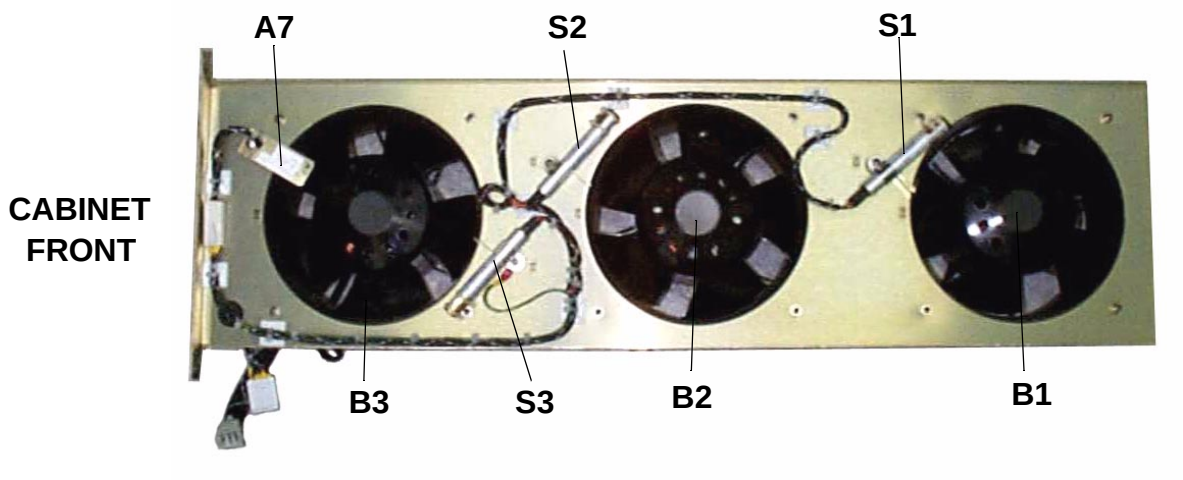

Figure 6-55 Fan Intake Drawer, showing assemblies B1-B3, S1-S3, and A7

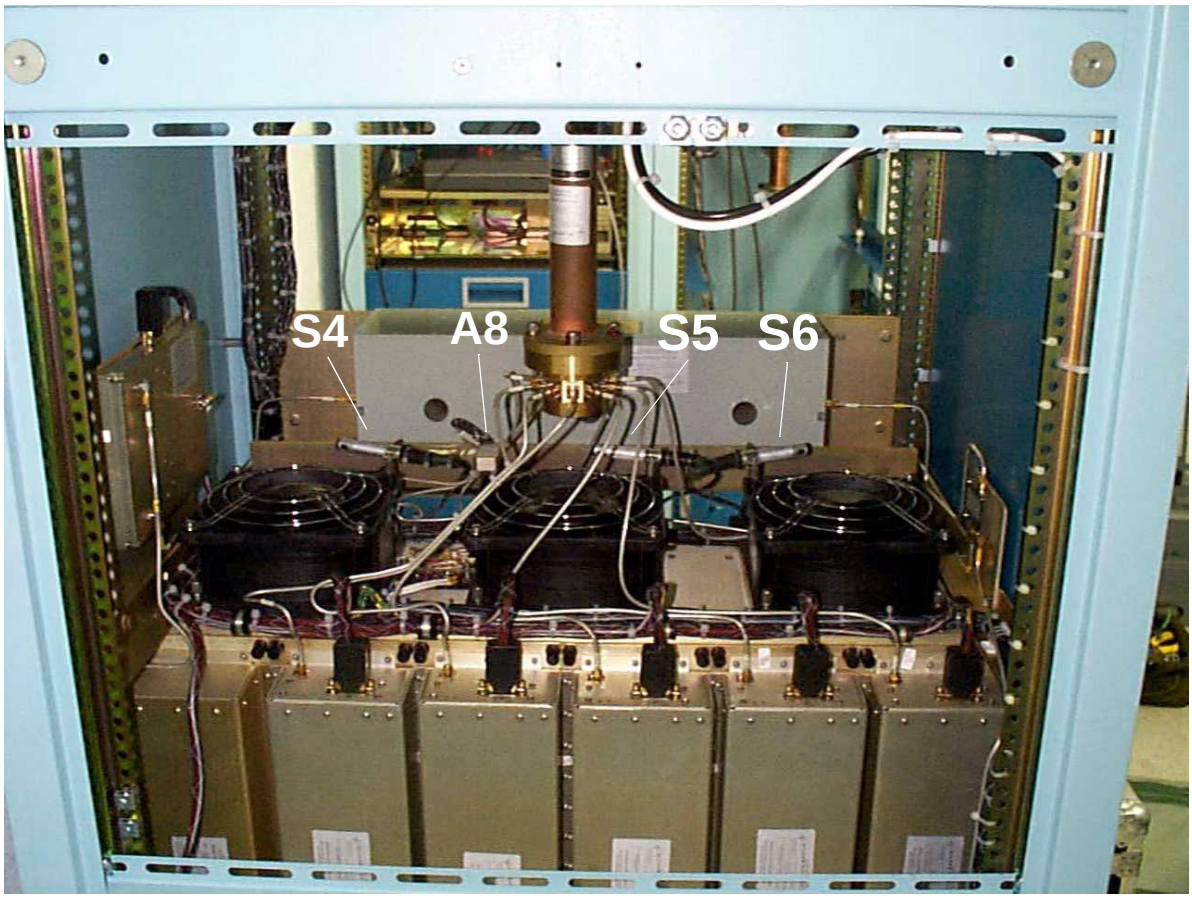

Figure 6-56 Exhaust Fan and Temperature Monitoring Sensors, S4-S6 and A8

*****NOTE*****

Prior to replacing switch vane assemblies, make sure to note the exact position and orientation of the switch vane assembly (S1- S6). Improperly positioned fan vanes will cause false fan failures to be detected by the SCMI. Refer to Figure 6-55 and Figure 6-56.

6.15.1.1 Switch Vane S1-S3 Replacement Procedure

1. Follow the standard power-down sequence described in Section 2.3.

2. Unscrew the four captive fasteners securing the front lower vent panel and filter to cabinet.

3. Remove the front lower vent panel and air filter from the cabinet.

4. Disconnect the two wire harness connectors from mating connectors of intake fan drawer assembly.

Figure 6-57 Intake Fan Drawer

5. Carefully slide intake fan drawer assembly from cabinet as shown in Figure 6-57.

6. Disconnect mating connector of the corresponding cable harness from switch vane to be removed (see Figure 6-55).

7. Unscrew captive fastener securing switch vane to be removed to associated fan assembly.

8. Remove switch vane with bracket and captive fastener from the cabinet.

9. Install replacement switch vane with bracket and captive fastener onto to associated fan assembly and secure.

10. Connect mating connector of the corresponding cable harness to installed switch vane.

11. Carefully slide intake fan drawer assembly into cabinet.

12. Connect the two wire harness connectors to mating connectors of intake fan drawer assembly.

13. Install front lower vent panel and air filter to cabinet and secure with the four captive fasteners.

14. Follow the standard power-up sequence defined in Section 2.4.

6.15.1.2 Switch Vane S4-S6 Replacement Procedure

1. Follow the standard power-down sequence described in Section 2.3.

2. Remove left-side cabinet panel.

3. Disconnect mating connector of the corresponding cable harness from switch vane to be removed (see Figure 6-56).

4. Unscrew captive fastener securing switch vane to be removed to associated fan assembly.

5. Remove switch vane with bracket and captive fastener from the cabinet.

6. Install replacement switch vane with bracket and captive fastener onto to associated fan assembly and secure.

7. Connect mating connector of the corresponding cable harness to installed switch vane.

8. Install left-side cabinet panel.

9. Follow the standard power-up sequence defined in Section 2.4.

6.15.2 Cabinet Temperature Monitoring

The thermal detector assemblies A7 and A8 are similar and are used to monitor the temperature level within the power amplifier cabinet. Assembly A7 is used to monitor the temperature at the intake cooling fans (B1 through B3). It is mounted inside the fan drawer of the air intake plenum, which is just above the 23-inch rack chassis for 42V power supply assembly A6 (see Figure 6-55). Access to assembly A7 is made from the front of the power amplifier cabinet assembly by sliding out the fan drawer.

Assembly A8 is used to monitor the temperature at the exhaust cooling fans (B4 through B6). It is mounted on top of the center exhaust fan B5 inside the system cabinet assembly (see Figure 6-56). Access to assembly A8 is made from the left-side cover panel of the power amplifier cabinet assembly.

6.15.2.1 Intake Sensor (A7) Replacement Procedure

1. Follow the standard power-down sequence described in Section 2.3.

2. Unscrew the four captive fasteners securing the front lower vent panel and filter to cabinet.

3. Remove the front lower vent panel and air filter from the cabinet.

4. Disconnect the two wire harness connectors from mating connectors of intake fan drawer assembly.

5. Carefully slide intake fan drawer assembly from cabinet.

6. Disconnect mating connector P3 of the corresponding cable harness from connector A7-P4.

7. Unscrew captive fastener securing assembly A7 to intake fan drawer assembly.

8. Remove assembly A7 with bracket and captive fastener from the cabinet.

9. Install replacement assembly A7 with bracket and captive fastener onto intake fan drawer assembly and secure.

10. Connect mating connector P3 of the corresponding cable harness to connector A7P4.

11. Carefully slide intake fan drawer assembly into cabinet.

12. Connect the two wire harness connectors to mating connectors of intake fan drawer assembly.

13. Install front lower vent panel and air filter to cabinet and secure with the four captive fasteners.

14. Follow the standard power-up sequence defined in Section 2.4.

6.15.2.2 Exhaust Sensor (A8) Replacement Procedure

1. Follow the standard power-down sequence described in Section 2.3.
2. Remove left-side cabinet panel.
3. Disconnect mating connector P5 of the corresponding cable harness from connector A8P6.
4. Unscrew captive fastener securing assembly A8 to the cabinet interior
5. Remove assembly A8 with bracket and captive fastener from the cabinet.
6. Install replacement assembly A8 with bracket and captive fastener in the cabinet interior and secure.
7. Install left-side cabinet panel.
8. Follow the standard power-up sequence defined in Section 2.4.

6.16 Power Amplifier Output RF Power Monitoring

Power amplifier output forward and reflected power levels are measured using a dual directional coupler and detector circuits. The detector outputs are monitored by the SCMI to monitor of the overall power output of the transmitter and calculate the Voltage Standing Wave Ratio (VSWR). If the VSWR exceeds specified levels the SCMI shuts down the power amplifier by issuing an RF KILL. Power amplifier VSWR faults can only be cleared (reset) locally using the SCMI front panel controls, or reset remotely using the Profiler Maintenance Terminal (PMT).

6.16.1 Dual Directional Coupler

The dual directional coupler assembly DC1 is located inside the center of the amplifier cabinet assembly (see Figure 6-58). It consists of RF coupling circuits and a 1-5/8-inch EIA connector. Access to the dual directional coupler assembly DC1 is made from the left-side cover panel of the power amplifier cabinet assembly.

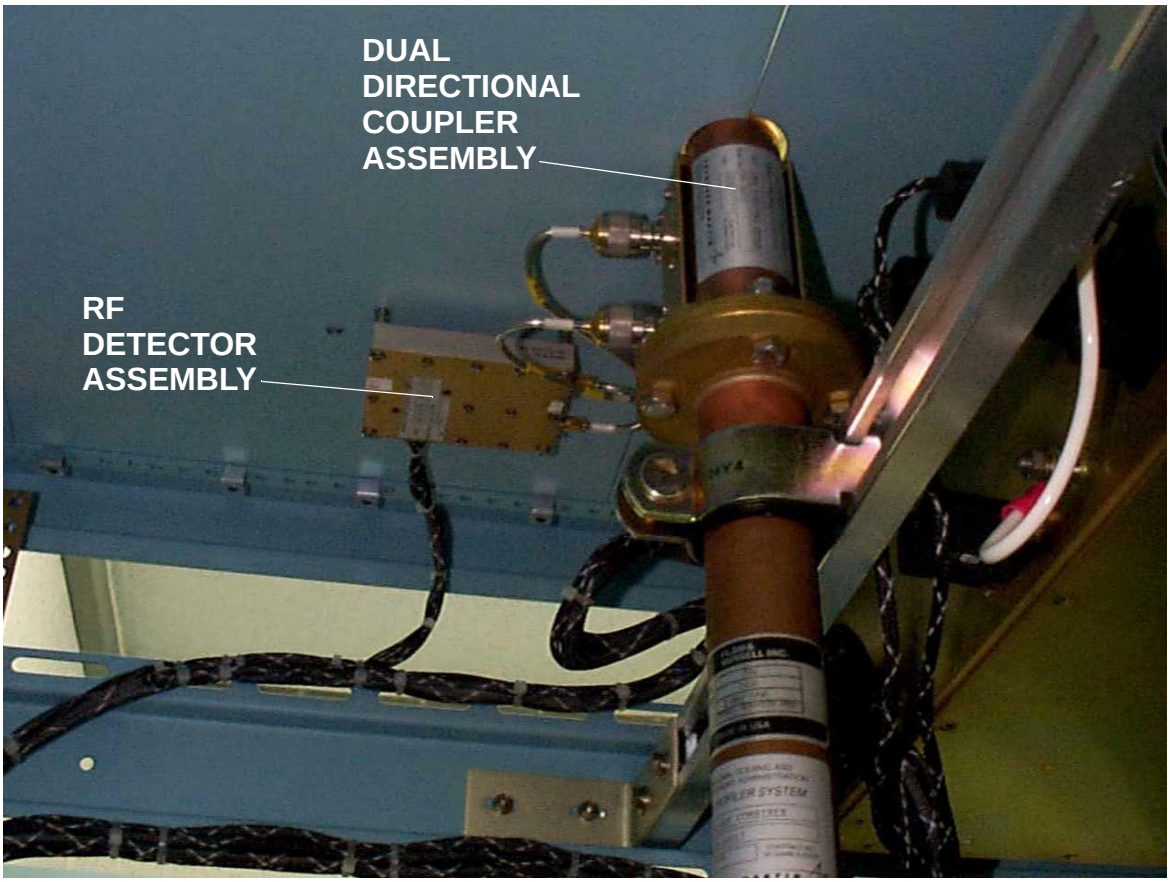

Figure 6-58 Location of RF Detector and Dual Directional Coupler

6.16.1.1 Replacement Procedure

1. Follow the standard power-down sequence described in Section 2.3.

2. Remove left-side cabinet panel.

3. Disconnect RF cables W21 through W30, from the input connectors of 10-way combiner assembly HY4.

4. Disconnect RF cables W31 and W32 from the connectors J3 and J4 of dual directional coupler assembly DC1.

5. Firmly holding assemblies DC1 and HY4, unscrew the nut securing the collar and DC1/HY4.

6. Still supporting DC1/HY4, remove the collar.

7. Lift the top front panel from cabinet and remove assemblies DC1 and HY4.

8. Separate the assemblies by removing the four bolts securing HY4 output connector to DC1 input connector.

9. Install assembly to be replaced and secure with four bolts and corresponding nuts.

10. Firmly holding the joined assemblies, lift the top front panel of cabinet and install the DC1/HY4 assembly.

11. Install the waveguide collar and secure in cabinet with corresponding nut and bolt.

12. Connect the RF cables to appropriate connectors.

13. Install left-side cabinet panel.

14. Follow the standard power-up sequence defined in Section 2.4.

6.16.2 RF Detector Assembly

The RF Detector assembly A5 consists RF detector diodes and analog circuits to provide RF output power levels used for fault monitoring of power amplifier operation. It is located inside the amplifier cabinet assembly fastened to the right-side top cover panel as shown in Figure 6-58. The internal component layout of the RF Detector is shown in Figure 6-59. The RF Detector's schematic Diagram is shown in Figure 6-60.

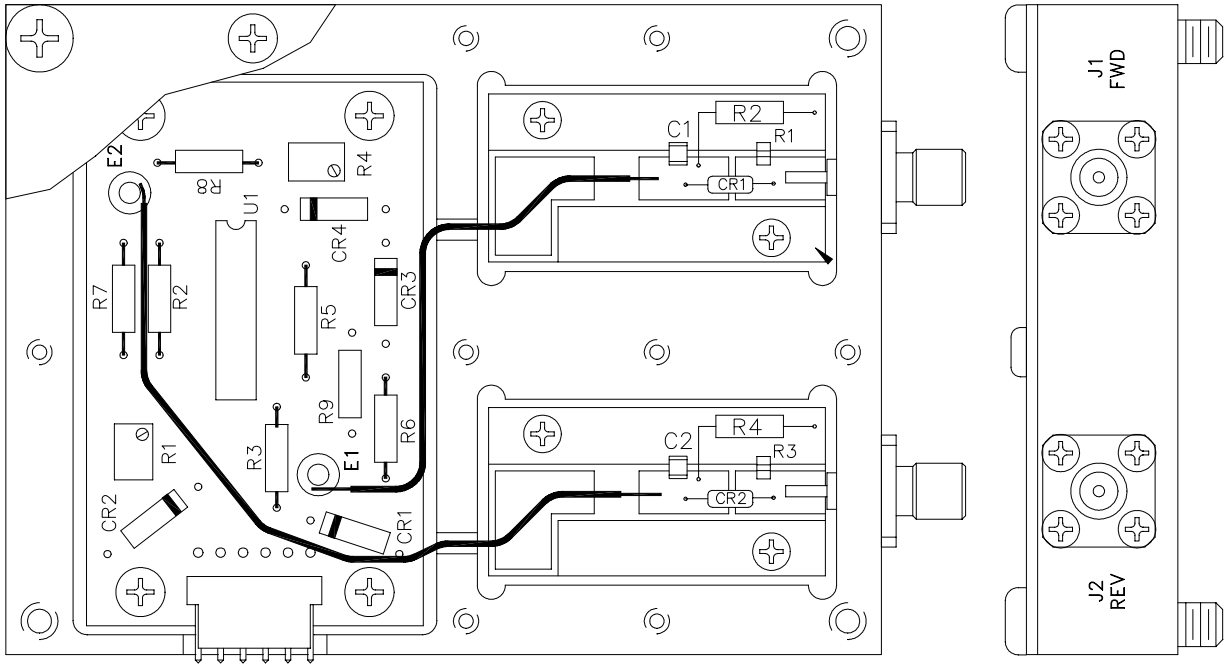

Figure 6-59 RF Detector Assembly Component Layout

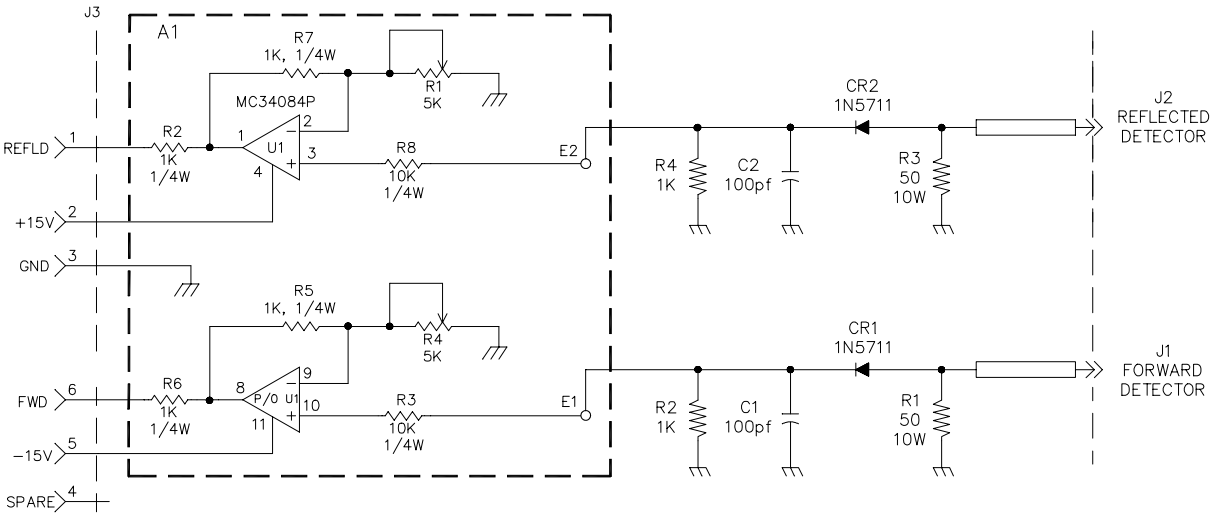

Figure 6-60 RF Detector Assembly Schematic Diagram

6.16.2.1 Replacement Procedure

1. Follow the standard power-down sequence described in Section 2.3.

2. Remove right-side cabinet panel.

3. Disconnect mating connector of the corresponding cable harness from connector A5J3.

4. Disconnect RF cables W31 and W32 from connectors A5J1 and A5J2 respectively.

5. Support assembly A5 and unscrew four captive fasteners.

6. Remove assembly A5 with captive fasteners from cabinet.

7. Install replacement assembly A5 by securing to the rear section of the top panel with four captive fasteners.

8. Connect the appropriate wire harness and RF cables.

9. Refer to the alignment procedures defined in Section 6.17.2.5 "Transmitter Output Detector Alignment" on page 6-79.

6.16.3 10-Way Power Combiner

The 10-Way Combiner, HY4, is a passive radial power combiner used to sum the outputs of the ten HPA modules into one output. Assembly HY4 is located inside the center of the power amplifier cabinet assembly attached to the dual directional coupler assembly DC1 (see Figure 6-61). It consists of RF combiner circuits and a 1-5/8-inch diameter coaxial air line with an EIA connector. Access to HY4 is made from the left-side cover panel of the power amplifier cabinet assembly.

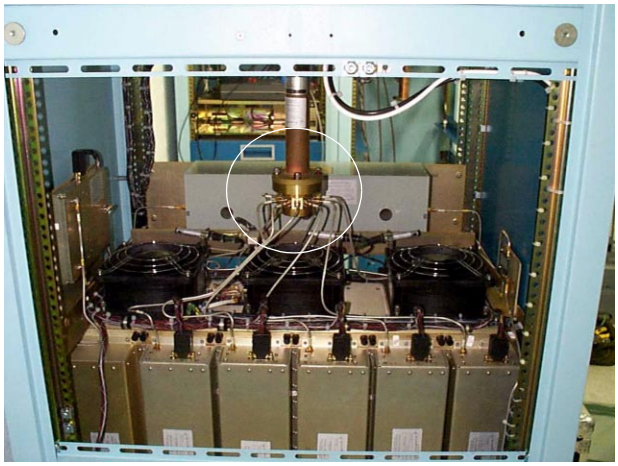

Figure 6-61 10-Way Power Combiner

6.16.3.1 Replacement Procedure

1. Follow the standard power-down sequence described in Section 2.3.

2. Remove left-side cabinet panel.

3. Disconnect RF cables W21 through W30, from the input connectors of 10-way combiner assembly HY4.

4. Disconnect RF cables W31 and W32 from the connectors J3 and J4 of dual directional coupler assembly DC1.

5. Firmly holding assemblies DC1 and HY4, unscrew the nut securing the collar and DC1/HY4.

6. Still supporting DC1/HY4, remove the collar.

7. Lift the top front panel from cabinet and remove assemblies DC1 and HY4.

8. Separate the assemblies by removing the four bolts securing HY4 output connector to DC1 input connector.
9. Install assembly to be replaced and secure with four bolts and corresponding nuts.

10. Firmly holding the joined assemblies, lift the top front panel of cabinet and install the DC1/HY4 assembly.

11. Install the waveguide collar and secure in cabinet with corresponding nut and bolt.

12. Connect the RF cables to appropriate connectors.

13. Install left-side cabinet panel.

14. Follow the standard power-up sequence defined in Section 2.4.

6.17 Power Amplifier Performance Checks and Alignment Procedures

These performance checks and alignment procedures are furnished by Lockheed Martin / PST (last updated Nov. 1999). The following sections describe necessary checks and/ or alignments necessary for proper operation of the PST 449 MHz Power Amplifier Assembly. Alignment settings are determined by viewing SCMI display readings and /or corresponding detected voltages within the SCMI LRU both with and without HPA modules enabled.

Detected voltages are monitored primarily at initial system set-up and are not necessary when replacing individual LRUs of the transmitter. Detected voltages should be monitored using a wide bandwidth oscilloscope (500 MHz preferred) because the detected voltages are pulses having the same Pulse Width and Duty Cycle as the RF signals being applied at the transmitter input.

6.17.1 Power Amplifier Performance Checks

The following sections describe typical SCMI display readings with and without HPAs enabled and radiating, and corresponding detected voltages associated with these readings. Also included are procedures which detail proper alignment of the Driver Control Input Assembly, Drivers, Driver Control Output Assembly, HPAs, and Output Detector. Power supplies issued to NOAA are properly aligned at the factory and should require no field adjustments. Lockheed Martin 449 MHz radar parameters are used as reference waveforms throughout these alignments and readings. Typical values are given for both high (20 usec. @ 14.2%) mode and low (3.33 usec @ 5.2%) mode operation. It is assumed that the radar is otherwise operational with no system LRU failures, which may introduce a radar *Inoperative* condition.

6.17.1.1 Typical SCMI Display Readings with all HPA Modules Disabled

While the system is in operational mode, actively radiating, and cycling between the beams and modes, perform the following procedure to check for proper alignments of the Driver Input Control Assembly, Driver Amplifiers, and Driver Output Control Assembly.

1. Press the **LCL** (Local) switch on the SCMI front panel to place SCMI into *Local* mode

2. Press the **OPR STBY** (Operate/Standby) switch on the SCMI front panel to place transmitter in *Standby* mode.

3. Disable all HPA modules by pressing the **HPA SEL** (HPA Select) switch on the SCMI front panel.

4. Turn the selected HPA *OFF* by pressing the **HPA ON/OFF** switch on the SCMI front panel. Repeat steps 3 and 4 unit all HPA modules have been disabled.

5. Remain in *Local* mode and return to *Operate* by pressing the **OPR/STBY** (Operate/Standby) switch on the SCMI front panel.

Typical SCMI front panel readings and detected voltages (within the SCMI on circuit board A5) with all HPA modules *disabled* are shown in Table 6-11. Sample points are selected by pressing the appropriate switches on the SCMI front panel:

*****CAUTION*****
Always be in *LOCAL* and *STANDBY* when switching between drivers, then *LOCAL* and *Operate* to take the readings.

Table 6-11 Forward/Reflected Power Levels with all HPA Modules Disabled

SCMI Display				SCMI IC Detected Voltages			
Sample	**High Mode**	**Low Mode**	**Unit**	**Pin**	**High Mode**	**Low Mode**	**Unit**
RF In Fwd	9.5	9.5	dB	A5 U2-10	5.4	5.4	Vdc
RF In Rev	0	0	dB	A5 U3-3	0/	0	Vdc
DA Fwd	699	731	W	A5 U6-19	4 - 4.4	4 - 4.4	Vdc
DB Fwd	700	750	W	A5 U6-20	4 - 4.4	4 - 4.6	Vdc
DR A Fwd	599	612	W	A5 U3-10	3.6	3.8	Vdc
DR A Rev	0	9	W	A5 U4-3	0	0	Vdc
DR B Fwd	700	625	W	A5 U3-10	3.6	3.9	Vdc
DR B Rev	0	0	W	A5 U4-3	0	0	Vdc

If the obtained readings are within 5% of the typical values in Table 6-11, and the transmitter is not reporting intermittent failures, then the Driver Input Control Assembly, Driver Amplifiers, and Driver Output Control Assembly are properly aligned.

If the obtained reading are not within specified limits, and the system exhibits intermittent failures of these LRUs, see the following associated sections on each LRU's alignment procedure.

6.17.1.2 Typical SCMI Display Readings with all HPA Modules Enabled

Once the SCMI display readings have been verified with HPA modules *OFF* they should be rechecked with all HPA modules *ON*. Also, the output power of each HPA module and total cabinet output power can be checked. This verifies proper alignment of all LRUs including HPAs. It is normal for the values obtained with HPAs *ON* to be slightly increased from those obtained with HPAs *OFF*.

1. Press the **LCL** (Local) switch on the SCMI front panel to place SCMI into *Local* mode. The *REM* (Remote) LED indicator is *OFF* in *Local* mode

2. Press the **OPR STBY** (Operate/Standby) switch on the SCMI front panel to place transmitter into STBY (Standby) mode.

3. Enable all HPA modules by pressing the **HPA SEL** (HPA Select) switch on the SCMI front panel.

4. Turn the selected HPA *ON* by pressing the **HPA ON/OFF** switch on the SCMI front panel. Repeat steps 3 and 4 unit all HPA modules have been enabled.

5. Remain in *Local* mode and return to *Operate* by pressing the **OPR STBY** (Operate/Standby) switch on the SCMI front panel.

Typical SCMI front panel readings and detected voltages within the SCMI with all HPA modules Enabled are shown in Table 6-12. Sample points are selected by pressing the appropriate switches on the SCMI front panel:

*****CAUTION*****
Always be in *LOCAL* and *STANDBY* when switching between drivers, then *LOCAL* and *Operate* to take the readings.

Table 6-12 Forward/Reflected Power Levels with all HPA Modules Enabled

SCMI Display				SCMI IC Detected Voltages			
Sample	**High Mode**	**Low Mode**	**Unit**	**Pin**	**High Mode**	**Low Mode**	**Unit**
RF In Fwd	9.7	9.6	dB	A5 U2-10	5.4	5.4	Vdc
RF In Rev	6.7	6.3	dB	A5 U3-3	300	300	mVdc
DA Fwd	789	750	W	A5 U6-19	4 - 4.4	4 - 4.4	Vdc
DB Fwd	795	850	W	A5 U6-19	4 - 4.5	4.5 - 5.0	Vdc
DR A Fwd	738	724	W	A5 U3-10	4.0	4.0	Vdc
DR A Rev	0	0	W	A5 U4-3	500	500	mVdc noise
DR B Fwd	740	800	W	A5 U3-10	4.0	4.6	Vdc
DR B Rev	0	0	W	A5 U4-3	650	650	mVdc noise
PAOut A Fwd	12.6	12.6	KW	A5 U4-10	2.2	2.2	Vdc

Table 6-12 Forward/Reflected Power Levels with all HPA Modules Enabled

SCMI Display				SCMI IC Detected Voltages			
Sample	High Mode	Low Mode	Unit	Pin	High Mode	Low Mode	Unit
PAOut A Rev	0	0	W	A5 U5-3	0	0	Vdc
PAOut B Fwd	12.66	13.6	KW	A5 U4-10	2.2	2.4	Vdc
PAOut B Rev	0	0	W	A5 U5-3	0	0	Vdc
HPAs A or B	~2.2	~2.2	KW	various	~4.5	~4.5	Vdc

If the obtained readings are within 5% of the typical values in Table 6-12, and the transmitter is not reporting intermittent LRU failures, then the Driver Input Control Assembly, Driver Amplifiers, and Driver Output Control Assembly are properly aligned.

If the obtained reading are not within specified limits, and the system exhibits intermittent failures of these LRUs, see the following associated sections on each LRU's alignment procedure.

6.17.2 Power Amplifier Alignment Procedures

***** WARNING WARNING WARNING *****

Alignments require working inside the power amplifier cabinet while the transmitter is running. The power amplifier cabinet interior contains HIGH VOLTAGE and CURRENT terminal blocks and bus bars! Exercise extreme caution NOT to come in contact with, or let unmounted assemblies come in contact with HIGH VOLTAGE areas such as terminal blocks or the high current bus bar located at the bottom rear of the cabinet!

The following LRUs require adjustment of the detector circuits after replacement:

- Driver Input Control Assembly (A1)
- Driver Amplifier Modules A & B
- Driver Output Control Assembly (A2)
- HPA Modules 1 - 10
- Transmitter Output RF Detector. (A5)

***** NOTE *****
Several alignments require the transmitter to be in LOCAL mode, and LOCAL defaults to REMOTE after approximately one hour.

Once an LRU has been deemed failed, refer to the appropriate section for replacement procedures, then return to this section for alignment procedures. The following tools are necessary to perform the alignments:

- Medium flat blade and Phillips screwdrivers (to remove/install mounting hardware)
- Small flat blade screwdriver (to remove/install dc connectors)
- Jewelers flat blade screwdriver (to adjust monitoring circuit potentiometers).

6.17.2.1 Driver Input Control Assembly Alignment

1. Place the radar into *Maintenance* mode via the PMT, this ensures the RF signal is disabled at the transmitter input.

2. Turn *OFF* the transmitter cabinet AC power at the shelter power distribution panel (breaker # 17/19) and wait 10 minutes for all stored voltages to bleed off.

3. Unmount the Driver Input Control Assembly from its mounting location but leave all RF and power connectors attached.

4. Position Driver Input Control Assembly so that it is clear from contact with the rest of the transmitter cabinet (**especially the high current bus bar at the bottom rear of the cabinet**). The Driver Input Control Assembly detector circuit adjustment screws are accessible at the rear of the assembly.

5. Turn *ON* the transmitter cabinet's AC power at the shelter power distribution panel (breaker # 17/19).

6. Select *Local* mode on the transmitter by pressing the **LCL** switch on the SCMI front panel.

7. Select *Standby* mode on the transmitter by pressing the **OPR STBY** switch on the SCMI front panel.

8. Disable each of the ten HPA modules in the transmitter by pressing **DISP HPAS**, then **HPA SEL**, and **HPA ON/OFF** switches on the SCMI front panel. Repeat pressing **HPA SEL** and **HPA ON/OFF** until all HPA modules have been disabled. Ensure all HPA modules have been turned *OFF*, or erroneous reading or alignments may result.

9. Place the radar into *Operational* mode via the PMT, but keep the transmitter in *Local* and *Standby* modes on the SCMI front panel.

10. With the radar cycling in *Operational* mode, go from *Standby* to *Operate* by pressing the **OPR STBY** switch on the SCMI front panel. All HPAs must remain *OFF* (disabled) during this alignment.

11. Press the **DISP RF IN** switch on the SCMI front panel and select *FWD* via the **FWD REFLD** switch on the SCMI front panel.

12. It is assumed the RF signal being applied to the transmitter input is between 8.5 and 11 dBm. On the rear of the Driver Input Control Assembly, adjust the *FWD* detector (the port-hole furthest from the edge of the assembly, see Figure 6-62) so that the SCMI display reads 9.5 to 10.0 dB.

13. Select *REFLD* by pressing the **FWD REFLD** switch on the SCMI front panel.

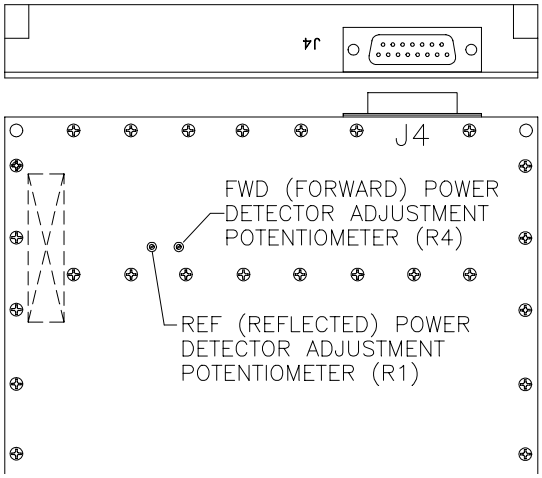

Figure 6-62 Driver Input Control Alignment Pot Locations

14. On the rear of the Driver Input Control Assembly, adjust the *RFL* detector (the port-hole closest to the edge of the assembly, see Figure 6-62) so that the SCMI display reads 0 dB.

15. Place the transmitter into *Standby* mode by pressing the **OPR STBY** switch on the SCMI front panel.

16. Place the radar into *Maintenance* mode via the PMT to ensure RF to the transmitter has been disabled.

17. Turn *OFF* transmitter via the shelter power distribution panel and allow 10 minutes for stored charges to bleed off.

18. Remount Driver Input Control Assembly to the air intake plenum.

19. Turn *ON* transmitter via the shelter power distribution panel.

20. Place the radar into *Operational* mode via the PMT.

6.17.2.2 Driver Amplifier Alignment

1. Place the radar into *Maintenance* mode via the PMT to ensure the RF input is disabled to the transmitter.

2. Enter *Local* on the transmitter by pressing the **LCL** switch on the SCMI front panel.

3. Enter *STBY* (Standby) mode on the transmitter by pressing the **OPR STBY** switch on the SCMI front panel.

4. Select and turn *OFF* each of the ten HPAs in the transmitter by pressing **DISP HPAS** then **HPA SEL** and **HPA ON/OFF** switches on the SCMI front panel. Sequence through all HPAs and ensure all HPAs are turned *OFF*, or erroneous alignments may result.

5. Place the radar into *Operational* mode via the PMT, but stay in *Local* and *STBY* (Standby) modes on the SCMI front panel.

6. With radar cycling in *Operational* mode, go from *STBY* to *OPERATE* by pressing the **OPR STBY** switch on the SCMI front panel. All HPAs must remain *OFF* during this alignment.

7. Press **DISP DRVR** switch to display the appropriate driver being aligned (DA or DB on SCMI display).

8. Adjust the *FWD* detector on the driver being aligned (this is located on the Driver module in the port-hole closest to connector J3, see Figure 6-63) so that the SCMI display reads ~700W. There is no adjustment for the RFL detector on the Driver module, as it is not used.

9. Put the transmitter into *STBY* (Standby) by pressing the **OPR STBY** switch on the SCMI front panel.

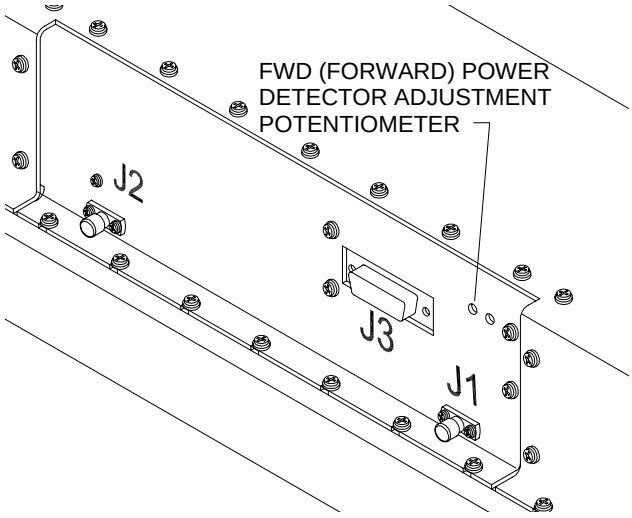

Figure 6-63 Driver Amplifier Assembly Alignment Pot Locations

10. Select and turn *ON* each of the ten HPAs in the transmitter by pressing **DISP HPAS** then **HPA SEL** and **HPA ON/OFF** switches on the SCMI front panel.

11. Put the transmitter into *Operate* mode by pressing the **OPR STBY** switch on the SCMI front panel.

12. Put the transmitter into *REM* (Remote) by pressing the **LCL** switch on the SCMI front panel.

6.17.2.3 Driver Control Output Assembly Alignment

1. Place the radar into *Maintenance* mode via the PMT to ensure the RF input signal is disabled to the transmitter.

2. Turn *OFF* the transmitter at the shelter power distribution panel (breaker #17/19) and wait 10 minutes for all stored voltages to bleed off.

3. Remove Driver Output Control Assembly from its mounting location but leave all RF and power connectors attached.

4. Position Driver Output Control Assembly so that it is clear of contact with the rest of the transmitter cabinet (**especially the fans and flow switches within the cabinet**) The detector circuit adjustment screws are accessible from the rear of the Driver Output Control Assembly.

5. Turn transmitter *ON* at the shelter power distribution panel.

6. Enter *Local* mode on the transmitter by pressing the **LCL** switch on the SCMI front panel. The *REM* LED is *OFF* in Local mode

7. Place the transmitter into *STBY* (Standby) mode by pressing the **OPR STBY** switch on the SCMI front panel.

8. Select and turn *OFF* each of the ten HPAs in the transmitter by pressing **DISP HPAS** then **HPA SEL** and **HPA ON/OFF** switches on the SCMI front panel. Ensure all HPAs are turned *OFF* or erroneous alignments may result.

9. Place the radar into *Operational* mode via the PMT but keep the transmitter in *Local* and *STBY* (Standby) on the SCMI front panel.

10. With radar cycling in *Operational* mode, go from *STBY* to *OPERATE* by pressing the **OPR STBY** switch on the SCMI front panel. All HPAs must remain *OFF* during this alignment.

11. Press the **DISP DRVR** switch on the SCMI front panel so that "*DR*" is displayed and select *FWD* by pressing the **FWD REFLD** switch on the SCMI front panel.

12. On the rear of the Driver Control Output Assembly, adjust the FWD detector (the port-hole furthest from to the edge of the assembly, see Figure 6-64) so that the SCMI display reads ~600W.

13. Select *REFLD* by pressing the **FWD REFLD** switch on the SCMI front panel. Note and record the reflected power value. Any reading other than 0 W should be noted and forwarded to Lockheed Martin for resolution.

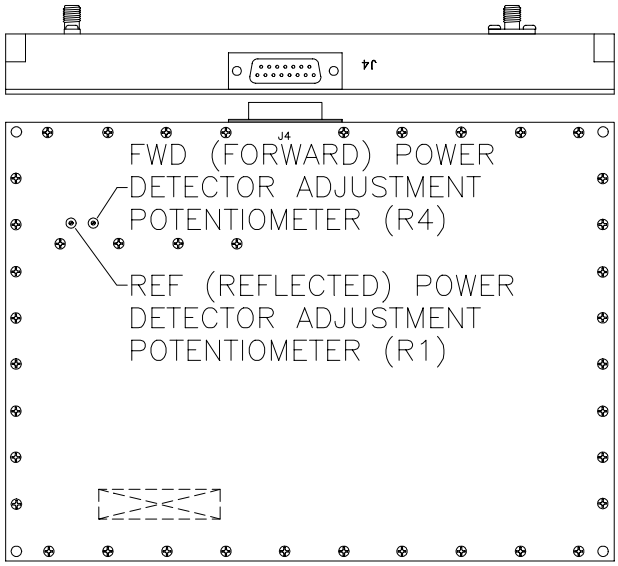

Figure 6-64 Driver Output Control Alignment Pot Locations

*****IMPORTANT*****

<u>DO NOT ADJUST</u> the reflected power detector (the port-hole closest to the edge of the assembly) so that the SCMI display reads 0 W. This is done at the PST factory.

14. Place the transmitter into *STBY* (Standby) by pressing the **OPR STBY** switch on the SCMI front panel.

15. Place the radar into *Maintenance* mode via the PMT and ensure RF input to the transmitter has been disabled.

16. Turn *OFF* transmitter at the shelter power distribution panel and allow 10 minutes for stored charges to bleed off.

17. Remount Driver Output Control Assembly.

18. Turn *ON* transmitter at the shelter power distribution panel.

19. Return the radar to *Operational* mode via the PMT.

6.17.2.4 HPA Module Alignment

1. With radar in *Operational* mode, radiating, and cycling through the beams, enter *Local* on transmitter by pressing the **LCL** (Local) on the SCMI front panel. The *REM* LED indicator is *OFF* in local mode

2. Press **DISP HPAS** (Display HPAs) then press **HPA SEL** (HPA Select) to display the HPA requiring alignment (continuing to press **HPA SEL** will scroll through each of the ten HPAs).

3. Select forward power by pressing **FWD REFLD** switch on SCMI front panel. The **FWD** LED indicator illuminates.

4. Adjust the forward power detector circuit on the HPA (the port-hole located closest to connector J3, see Figure 6-65) so that the SCMI display reads ~2.2 KW. There is no adjustment required for the HPA reflected power detector, as it is not used.

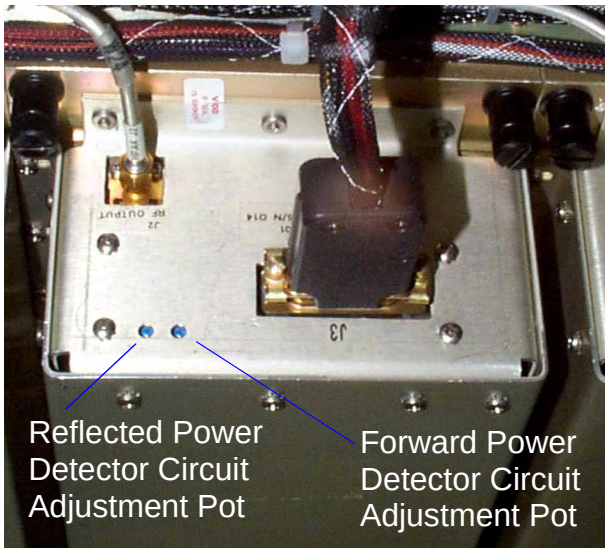

Figure 6-65 HPA Alignment Pots

5. Set the transmitter to *REM* (Remote) mode by pressing the **LCL** (Local) switch on the SCMI front panel. The *REM* LED indicator illuminates in remote mode.

6.17.2.5 Transmitter Output Detector Alignment

To align the RF Output Detector, assembly A5, an external peak power meter is used as a reference standard. The RF Detector is adjusted accordingly to make the SCMI's forward power reading match the reading of the external reference meter. The Power Amplifiers forward peak power can be measured at the directional coupler located inside the Beam Steering Unit (BSU) Cabinet. The following section describes the test equipment setup and measurement.

Test Equipment Setup

The Peak Power Meter used as the external reference is an HP model 8900D. The meter is included as part of a test kit that contains the following items (excluding the oscilloscope and screwdriver).

- HP8491A 10 dB Attenuator
- HP84811A Power Sensor
- HP8900D Peak Power Meter
- Digital Volt Meter (DVM)
- 100 MHZ Oscilloscope
- 2 - BNC (M) to BNC (M) coaxial cables
- Small flat-blade screwdriver

1. Connect one end of the HP8491A 10-dB Attenuator to the HP84811A Power Sensor and the other end to the FWR (forward) power port of the Directional Coupler as illustrated in Figure 6-66.

2. Connect the output cable of the Power Sensor to the SENSOR input of the HP8900D Peak Power Meter (point B in Figure 6-66).

3. Determine the correction factor marked on the Power Sensor body that is nearest to the 400-MHz range and dial it into the CORRECTION switches on the front panel of the Peak Power Meter (point C in Figure 6-66).

4. Set the *READING OFFSET* slider on the Peak Power Meter to "60 dB", set the *MODE* switch to *COMPARE*, and the *RANGE* switch to "10 mW". If an over range condition occurs during measurements, change the range to "100 mW".

5. Connect the *Trigger* Output of the HP8900D to the External Trigger Input of an oscilloscope using a BNC (M) to BNC (M) coaxial cable.

6. Connect the *Video* Output of the HP8900D to Channel One of an Oscilloscope using a BNC (M) to BNC (M) coaxial cable.

7. Oscilloscope Settings:

Channel One Volts/Div:	5 mV/Div
Time/Div:	5 us/Div (optimal for high mode)
Trigger:	External
Trigger Edge:	Rising Edge

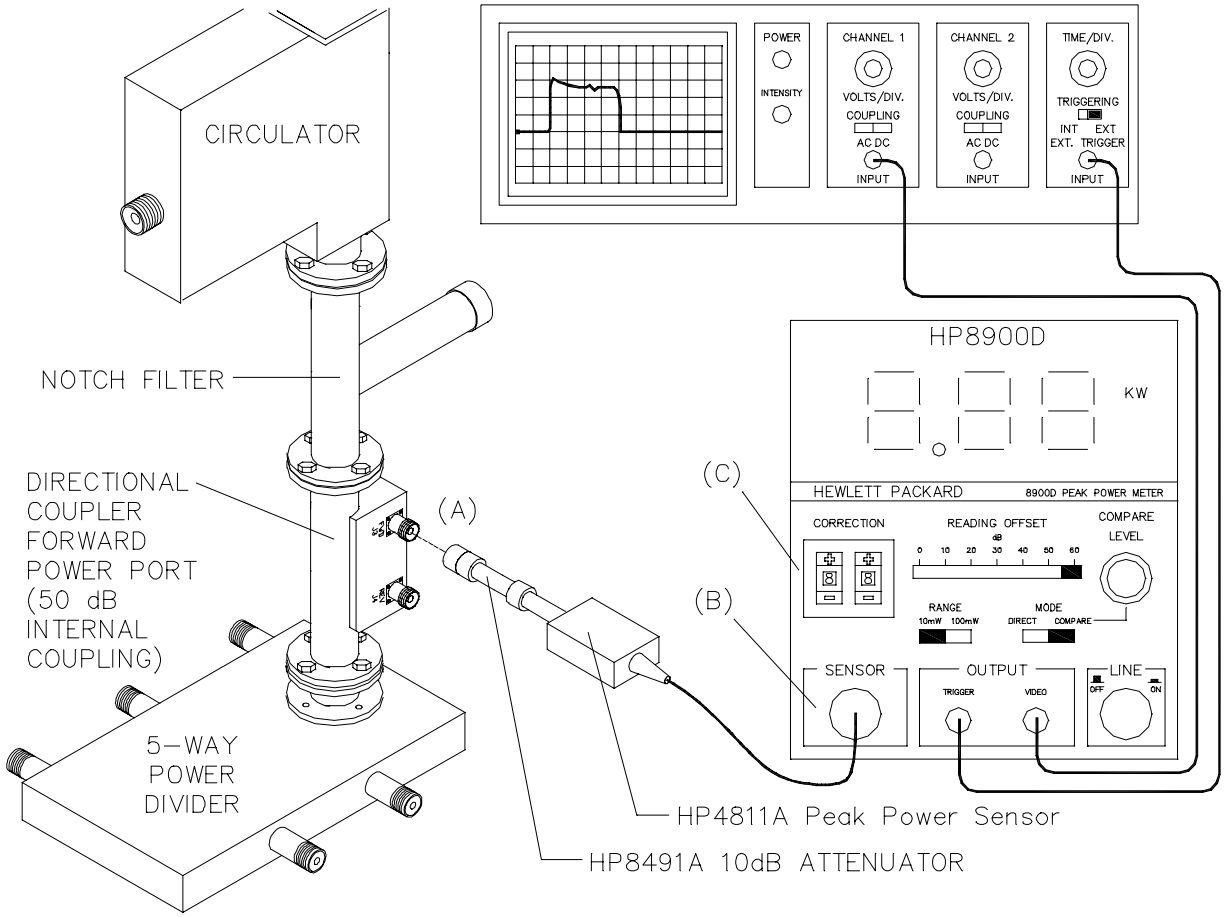

Figure 6-66 Test Equipment Setup for Measuring Peak Output Power

Power Measurement

The profiler spends two minutes in each of its three beams (east, north, and vertical): one minute in the high mode and then one minute in the low mode. All power measurements and adjustments must be made in the same beam and mode (preferably the *high* mode) to ensure the consistency of the measurement and calibration adjustments.

Observe the front panel of the Beam Steering Unit to determine when the profiler is in a particular beam and mode. When the radar switches beams, one minute remains to make measurements or adjustments in high mode before it switches to low mode using the procedures described below. If measurements or adjustments cannot be made in the selected one minute period, wait until the next time the radar switches into the desired beam and mode.

While the radar is in the beam and mode that has the highest measurable power, observe the waveforms on the oscilloscope. Adjust the COMPARE LEVEL knob on the HP8900D to position the compare trace at the top of the transmitted pulse waveform, averaging through any ripples. Figure 6-67 and Figure 6-68 are examples of transmitted pulses in the high and low modes respectively, the compare traces in these figures have been positioned correctly to achieve the most accurate representation of the peak power. Record the peak power value displayed on the HP8900D for later reference.

Figure 6-67 20 us Peak Power Pulse in High Mode

Waveform displayed on an oscilloscope when used in conjunction with an HP8900D peak power meter. The vertical position of the **Compare Trace** is varied by rotating the *Compare* knob on the HP8900D.

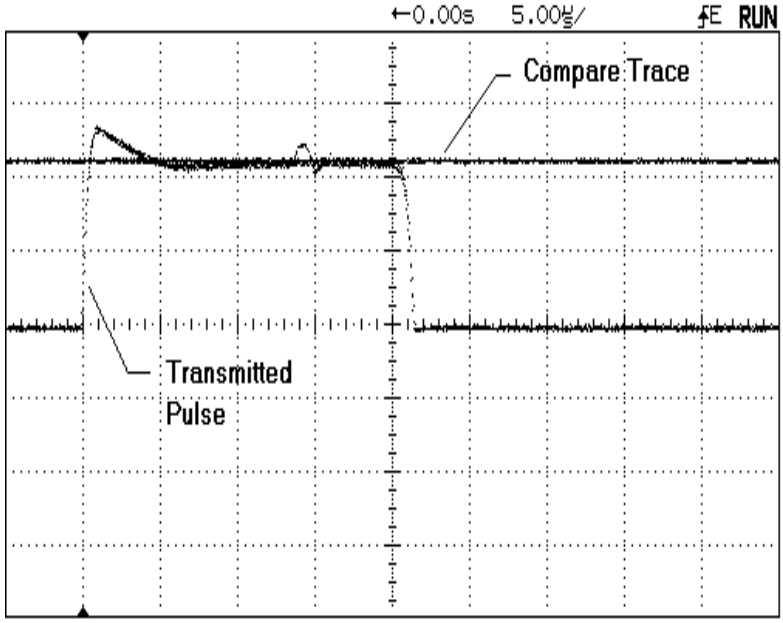

Figure 6-68 3.33 us Peak Power Pulse in Low Mode

Waveform displayed on an oscilloscope when used in conjunction with an HP8900D peak power meter. The vertical position of the **Compare Trace** is varied by rotating the *Compare* knob on the HP8900D.

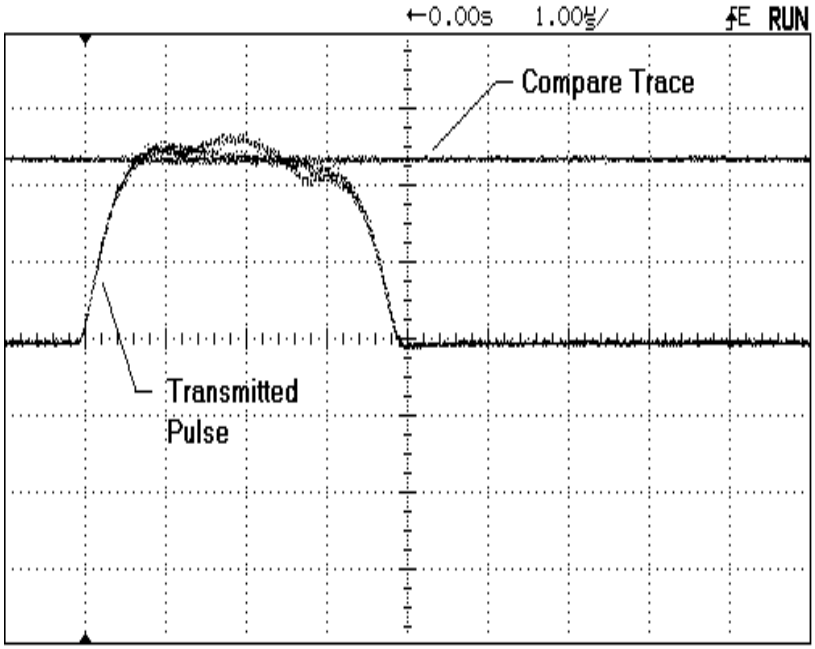

1. With radar in *Operational* mode, radiating, and cycling through the beams, enter *Local* on transmitter by pressing the **LCL** (Local) switch on the SCMI front panel.

2. Press **DISP RF OUT** (Display RF Output) switch on SCMI front panel and select forward power by pressing **FWD REFLD** switch on SCMI front panel. The **FWD** LED indicator illuminates.

3. Adjust the forward power detector circuit on the Output Detector Assembly (the port-hole near the FWD sample RF jack input to the assembly, see Figure 6-69) so that SCMI display matches as closely as possible to the total measured output peak power obtained using the external reference meter (HP 8900D), typically ~ 10 - 12 KW.

*****IMPORTANT*****

DO NOT ADJUST the reflected power detector, it is set at the PST factory.

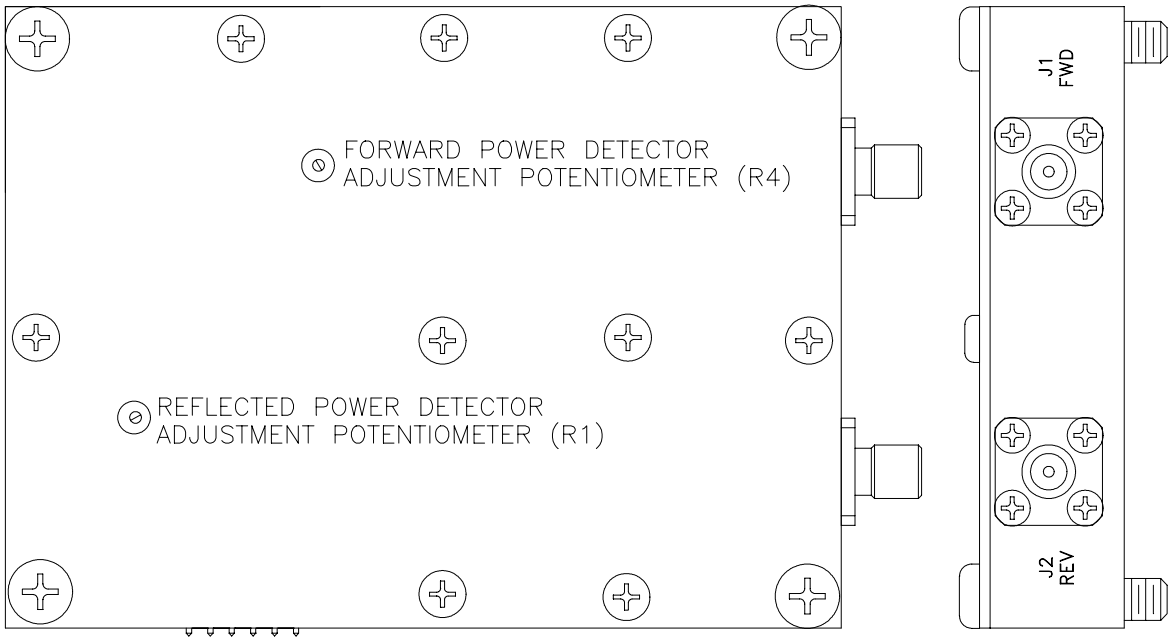

Figure 6-69 RF Detector Forward and Reflected Adjustment Pots

4. Press the **FWD REFLD** switch on SCMI front panel, note the reflected power reading. Any reading greater than 100 W for the RFL detector should be noted and forwarded to Lockheed Martin for resolution.

5. Place the transmitter into *REM* (Remote) by pressing the **LCL** switch on the SCMI front panel.

6.18 Power Amplifier Specifications

Table 6-13 RF and TCI Specifications

RF Load	
Nominal RF Impedance	50 Ohms
Operating VSWR	2.0:1, all phase angles over operating bandwidth
Non-destructive VSWR	Infinite, all phase angles
RF Output	
Frequency Range	449.0 MHz
Peak RF Output Power	16,000 watts, minimum
Spurious Noise (interpulse)	<-110 dBm/MHz from 1 msec after end of RF pulse
Pulse to Pulse (interpulse stability)	10.0° RMS, maximum
	0.2 dB, maximum
Intrapulse Stability	10.0° RMS, maximum
	0.5 dB, maximum
Duty Cycle	Continuous, 10% maximum
Input Pulse Durations	0.6 to 10.0 msec (uncoded) and 1.6 to 30.0 msec (coded)
Intrapulse Period	30.0 to 300.0 msec (with maximum duty cycle limitations)
RF Input	
RF Power Level (Peak)	+8.5 to +11 dBm
Timing and Control Interface	
High Power Amplifiers (HPA)	TTL line receivers Am26LS33DC
Logic Levels	TTL low to enable HPAs
Intrapulse Period	TTL high to disable HPAs

Table 6-14 Mechanical Specifications

Dimensions	Description
Height	65.37 inches (166.04 cm)
Width	28.56 inches (72.54 cm)
Cabinet Rack Standard Width	24 inches (60.96 cm)
Depth	31.56 inches (80.16 cm)
Weight	700 pounds (315 kg), typical
Cooling Fans Capability	2,000 CFM, maximum total

Table 6-15 Interface Connector Specifications

Connector	Description
RF Input	Type N bulkhead coaxial
RF Output	1- 5/8-inch EIA type
Timing and Control Interface (TCI)	25-Pin type D female connector
RS232 Interface	25-Pin type D male connector

Table 6-16 Environmental Specifications

Temperature Range	
Operating	+10 to +35° C
Non-Operating	-40 to +60° C
Relative Humidity	
Operating	0 to 100% (non-condensing)
Non-Operating	15 to 100% (non-condensing)
Altitude	
Operating	Up to 3,000 meters above mean sea level
Non-Operating	15,000 meters above mean sea level
Transportability	

Table 6-16 Environmental Specifications

(Shock and Vibration)	Capable of withstanding normal conditions as encountered in common surface, air, or sea carrier transportation, shipment and handling.

Table 6-17 Power Requirements

Input Prime Voltage	230 VAC ±15% Single Phase, 3 wire
Frequency	57 to 63 Hz
Prime Power	8 KVA, maximum (5.5 KVA, typical)
Power Factor	0.9, minimum

6.19 Power Amplifier Wire-Run List

Table 6-18 Cabinet Wire-Run List

Wire	From		To		TEFLON WIRE AWG		
Num	Sym No	Pin	Sym No	Pin	Color	Size	Remark
1	TB1	1	TB2	1+2	GRAY	12(X2)	A/C WIRE
2	TB1	1	TB2	3+4	GRAY	12(X2)	A/C WIRE
3	TB1	2	TB2	5+6	WHT	12(X2)	A/C WIRE
4	TB1	2	TB2	7+8	WHT	12(X2)	A/C WIRE
5	TB1	3	CHASSIS	GND	GRN	12(X4)	A/C WIRE
6	TB2	1	A6-TB1	1	GRAY	12	A/C WIRE
7	TB2	2	A6-TB1	3	GRAY	12	A/C WIRE
8	TB2	3	A6-TB1	5	GRAY	12	A/C WIRE
9	TB2	4	A6-TB1	7	GRAY	12	A/C WIRE
10	TB2	5	A6-TB1	2	WHT	12	A/C WIRE
11	TB2	6	A6-TB1	4	WHT	12	A/C WIRE
12	TB2	7	A6-TB1	6	WHT	12	A/C WIRE
13	TB2	8	A6-TB1	8	WHT	12	A/C WIRE
14	TB2	3	TB4-A	1	GRAY	12	A/C WIRE
15	TB2	5	TB4-A	5	WHT	12	A/C WIRE
16	PS5	L	TB4-A	4	GRAY	18	A/C WIRE
17	PS5	N	TB4-A	6	WHT	18	A/C WIRE
18	PS6	L	TB4-A	4	GRAY	18	JUMPER @ TB4
19	PS6	N	TB4-A	6	WHT	18	“1+2+3, 4+5+6”
20	P7	1	TB4-B	1	GRAY	18	A/C WIRE
21	P7	4	TB4-B	4	WHT	18	A/C WIRE
22	P7	2	TB4-B	2	GRAY	18	A/C WIRE
23	P7	5	TB4-B	5	WHT	18	A/C WIRE
24	P7	3	TB4-B	3	GRAY	18	A/C WIRE
25	P7	6	TB4-B	6	WHT	18	A/C WIRE
26	B4	A	TB4-B	1	BLK	18	LINE CORD
27	B4	B	TB4-B	4	BLK	18	LINE CORD
28	B5	A	TB4-B	2	BLK	18	LINE CORD
29	B5	B	TB4-B	5	BLK	18	LINE CORD
30	B6	A	TB4-B	3	BLK	18	LINE CORD
31	B6	B	TB4-B	6	BLK	18	LINE CORD
32	PS5	ACG	CHASSIS	GND	GR/YEL	18	A/C WIRE
33	PS6	ACG	CHASSIS	GND	GR/YEL	18	A/C WIRE

Table 6-18 Cabinet Wire-Run List

Wire	From		To		TEFLON WIRE AWG		
Num	Sym No	Pin	Sym No	Pin	Color	Size	Remark
34	A6	FG	CHASSIS	GND	GR/YEL	12	A/C WIRE
35	A3-J1	1	TB2	4	GRAY	18	A/C WIRE
36	A3-J1	2	TB2	6	WHT	18	A/C WIRE
37	A3-J1	3	CHASSIS	GND	GR/YEL	18	A/C WIRE
38	A4-J1	1	CB1-LOAD	1	BRN	18	20V LINE CORD
39	A4-J1	2	CB1-LOAD	4	BLUE	18	20V LINE CORD
40	A4-J1	3	CHASSIS	GND	GR/YEL	18	20V LINE CORD
41	A4-J2	1	HY2-J7	2	WHT	22	HPA 1 ON
42	A4-J2	2	HY2-J7	15	WHT	22	HPA 2 ON
43	A4-J2	3	HY2-J7	3	WHT	22	HPA 3 ON
44	A4-J2	4	HY2-J7	16	WHT	22	HPA 4 ON
45	A4-J2	5	HY2-J7	4	WHT	22	HPA 5 ON
46	A4-J2	6	HY3-J7	2	WHT	22	HPA 6 ON
47	A4-J2	7	HY3-J7	15	WHT	22	HPA 7 ON
48	A4-J2	8	HY3-J7	3	WHT	22	HPA 8 ON
49	A4-J2	9	HY3-J7	16	WHT	22	HPA 9 ON
50	A4-J2	10	HY3-J7	4	WHT	22	HPA 10 ON
51	A4-J2	11	A1-J4	2	WHT	22	DRIVER SW1
52	A4-J2	12	A2-J4	2	WHT	22	DRIVER SW2
53	A4-J2	13	A6-J2	17	WHT	22	PS1 INH
54	A4-J2	14	A6-J2	18	WHT	22	PS2 INH
55	A4-J2	15	A6-J2	19	WHT	22	PS3 INH
56	A4-J2	16	A6-J2	20	WHT	22	PS4 INH
57	A4-J3	1	A1-J4	4	WHT	22	DRIVER SW1
58	A4-J3	2	A1-J4	3	WHT	22	DRIVER SW2
59	A4-J3	3	A2-J4	4	WHT	22	DRIVER SW1
60	A4-J3	4	A2-J4	3	WHT	22	DRIVER SW2
61	A4-J3	5	HY2-J7	17	WHT	22	HPA 1-1
62	A4-J3	6	HY2-J7	5	WHT	22	HPA 1-2
63	A4-J3	7	HY2-J7	18	WHT	22	HPA 2-1
64	A4-J3	8	HY2-J7	6	WHT	22	HPA 2-2
65	A4-J3	9	HY2-J7	19	WHT	22	HPA 3-1
66	A4-J3	10	HY2-J7	7	WHT	22	HPA 3-2
67	A4-J3	11	HY2-J7	20	WHT	22	HPA 4-1
68	A4-J3	12	HY2-J7	8	WHT	22	HPA 4-2
69	A4-J3	13	HY2-J7	21	WHT	22	HPA 5-1
70	A4-J3	14	HY2-J7	9	WHT	22	HPA 5-2

Table 6-18 Cabinet Wire-Run List

Wire	From		To		TEFLON WIRE AWG		
Num	Sym No	Pin	Sym No	Pin	Color	Size	Remark
71	A4-J3	15	HY3-J7	17	WHT	22	HPA 6-1
72	A4-J3	16	HY3-J7	5	WHT	22	HPA 6-2
73	A4-J3	17	HY3-J7	18	WHT	22	HPA 7-1
74	A4-J3	18	HY3-J7	6	WHT	22	HPA 7-2
75	A4-J3	19	HY3-J7	19	WHT	22	HPA 8-1
76	A4-J3	20	HY3-J7	7	WHT	22	HPA 8-2
77	A4-J3	21	HY3-J7	20	WHT	22	HPA 9-1
78	A4-J3	22	HY3-J7	8	WHT	22	HPA 9-2
79	A4-J3	23	HY3-J7	21	WHT	22	HPA 10-1
80	A4-J3	24	HY3-J7	9	WHT	22	HPA 10-2
81	A4-J4	1	P1	1	WHT	22	FAN STS #1
82	A4-J4	2	P1	2	WHT	22	FAN STS #2
83	A4-J4	3	P1	3	WHT	22	FAN STS #3
84	A4-J4	4	S4	L	WHT	22	FAN STS #4
85	A4-J4	5	S5	L	WHT	22	FAN STS #5
86	A4-J4	6	S6	L	WHT	22	FAN STS #6
87	A4-J4	7	P1	7	WHT	22	IN TEMP
88	A4-J4	8	P5	1	WHT	22	OUT TEMP
89	A4-J4	9	A3-J2	11	WHT	22	A/C LO LINE
90	A4-J4	10	A3-J2	23	WHT	22	A/C HI LINE
91	A4-J4	11	PS6	+V	ORN	22	STS 15V PS6
92	A4-J4	12	PS5	+V	ORN	22	STS 15V PS5
93	A4-J4	23	TB3	4	VIO	22	-15V OUT
94	A4-J4	24	TB3	5	VIO	22	-15V OUT
95	A4-J4	25	CHASSIS	GND	BLK	22	
96	A4-J5	1	A6-J2	1	WHT	22	PS1 SUM FLT
97	A4-J5	2	A6-J2	2	WHT	22	PS1 AC ON
98	A4-J5	3	A6-J2	4	WHT	22	PS1 OVR CVRR
99	A4-J5	4	A6-J2	3	WHT	22	PS1 OVR TMP
100	A4-J5	5	A6-J2	5	WHT	22	PS2 SUM FLT
101	A4-J5	6	A6-J2	6	WHT	22	PS2 AC ON
102	A4-J5	7	A6-J2	8	WHT	22	PS2 OVR CURR
103	A4-J5	8	A6-J2	7	WHT	22	PS2 OVR TMP
104	A4-J5	9	A6-J2	9	WHT	22	PS3 SUM FLT
105	A4-J5	10	A6-J2	10	WHT	22	PS2 A/C ON
106	A4-J5	11	A6-J2	12	WHT	22	PS3 OVR CURR
107	A4-J5	12	A6-J2	11	WHT	22	PS3 OVR TMP

Table 6-18 Cabinet Wire-Run List

Wire	From		To		TEFLON WIRE AWG		
Num	Sym No	Pin	Sym No	Pin	Color	Size	Remark
108	A4-J5	13	A6-J2	13	WHT	22	PS4 SUM FLT
109	A4-J5	14	A6-J2	14	WHT	22	PS4 A/C/ ON
110	A4-J5	15	A6-J2	16	WHT	22	PS4 OVR CURR
111	A4-J5	16	A6-J2	15	WHT	22	PS4 OVR TMP
112	HY2-J7	10	CHASSIS	GND	BLK	22	
113	HY3-J7	10	CHASSIS	GND	BLK	22	
114	A4-J6	1	J1	14	WHT	22	TCI Q4+
115	A4-J6	2	J1	15	WHT	22	TCI Q4-
116	A4-J6	3	J1	7	WHT	22	TCI Q3+
117	A4-J6	4	J1	8	WHT	22	TCI Q3-
118	A4-J6	5	J1	4	WHT	22	TCI Q2+
119	A4-J6	6	J1	5	WHT	22	TCI Q2-
120	A4-J6	7	J1	1	WHT	22	TCI Q1+
121	A4-J6	8	J1	2	WHT	22	TCI Q1-
122	A4-J6	9	J1	17	WHT	22	TCI T/R +
123	A4-J6	10	J1	18	WHT	22	TCI T/R -
124	A4-J6	12	J1	20	WHT	22	CPU FLT+
125	A4-J6	13	J1	21	WHT	22	CPU FLT-
126	A4-J6	11	A1-J4	11	WHT	22	TCI RF KILL
127	A4-J7	1	A1-J4	7	RG	188	RF INPUT FWD
128	A4-J7	20	A1-J4	8	BLK	22	RF INPUT RTN
129	A4-J7	2	A1-J4	9	RG	188	RF INPUT FWD
130	A4-J7	21	A1-J4	10	BLK	22	RF INPUT RTN
131	A4-J7	3	DRV-A-J3	2	RG	188	FWD DET DRV A
132	A4-J7	22	DRV-A-J3	1	BLK	22	FWD DET DRV B
133	A4-J7	4	DRV-B-J3	2	RG	188	FWD DET DRV A
134	A4-J7	23	DRV-B-J3	1	BLK	22	FWD DET DRV B
135	A4-J7	5	A2-J4	7	RG	188	DRV OUT FWD
136	A4-J7	24	A2-J4	8	BLK	22	DRV OUT RTN
137	A4-J7	6	A2-J4	9	RG	188	DRV OUT REV
138	A4-J7	25	“A2,J4”	10	BLK	22	DRV OUT RTN
139	A4-J7	7	HPA 1-J3	2	RG	188	FWD DET HPA 1
140	A4-J7	26	HPA 1-J3	1	BLK	22	FWD DET RTN
141	A4-J7	8	HPA 2-J3	2	RG	188	FWD DET HPA 2
142	A4-J7	27	HPA 2-J3	1	BLK	22	FWD DET RTN
143	A4-J7	9	HPA 3-J3	2	RG	188	FWD DET HPA 3
144	A4-J7	28	HPA 3-J3	1	BLK	22	FWD DET RTN

Table 6-18 Cabinet Wire-Run List

Wire	From		To		TEFLON WIRE AWG		
Num	Sym No	Pin	Sym No	Pin	Color	Size	Remark
145	A4-J7	10	HPA 4-J3	2	RG	188	FWD DET HPA 4
146	A4-J7	29	HPA 4-J3	1	BLK	22	FWD DET RTN
147	A4-J7	11	HPA 5-J3	2	RG	188	FWD DET HPA 5
148	A4-J7	30	HPA 5-J3	1	BLK	22	FWD DET RTN
149	A4-J7	12	HPA 6-J3	2	RG	188	FWD DET HPA 6
150	A4-J7	31	HPA 6-J3	1	BLK	22	FWD DET RTN
151	A4-J7	13	HPA 7-J3	2	RG	188	FWD DET HPA 7
152	A4-J7	32	HPA 7-J3	1	BLK	22	FWD DET RTN
153	A4-J7	14	HPA 8-J3	2	RG	188	FWD DET HPA 8
154	A4-J7	33	HPA 8-J3	1	BLK	22	FWD DET RTN
155	A4-J7	15	HPA 9-J3	2	RG	188	FWD DET HPA 9
156	A4-J7	34	HPA 9-J3	1	BLK	22	FWD DET RTN
157	A4-J7	16	HPA 10-J3	2	RG	188	FWD DET HPA 10
158	A4-J7	35	HPA 10-J3	1	BLK	22	FWD DET RTN
159	A4-J7	17	A5-J3	6	RG	188	PA FWD
160	A4-J7	36	A5-J3	--	BLK	22	PA FWD RTN
161	A4-J7	18	A5-J3	1	RG	188	PA REV
162	A4-J7	37	A5-J3	3	BLK	22	PA REV RTN
163	A4-J2	18	K1	7	BRN	22	
164	A4-J4	18	P1	8	YEL	22	+5V
165	A4-J4	19	P1	9	WHT	22	TEMP SMPL
166	CHASSIS	GND	P1	10	BLK	22	5V RTN
167	A4-J4	20	P5	2	YEL	22	+5V
168	A4-J4	17	P5	3	WHT	22	TEMP SMPL
169	CHASSIS	GND	P5	4	BLK	22	5V RTN
170	A6-J2	22	CHASSIS	GND	BLK	22	
171	A4-J8	5	J2	7	BLK	22	
172	A4-J8	2	J2	3	WHT	22	REC DATA
173	A4-J8	3	J2	2	WHT	22	XMIT DATA
174	A3-J2	1	PS5	+V	ORN	22	+15V
175	A3-J2	14	PS5	+V	ORN	22	+15V
176	A3-J2	2	PS6	+V	ORN	22	+15V
177	A3-J2	15	PS6	+V	ORN	22	+15V
178	A3-J2	3	TB3	1	ORN	22	+15V
179	A3-J2	4	TB3	2	ORN	22	+15V
180	A3-J2	5	PS5	+V	BLK	22	
181	A3-J2	6	PS6	+V	BLK	22	

Table 6-18 Cabinet Wire-Run List

Wire	From		To		TEFLON WIRE AWG		
Num	Sym No	Pin	Sym No	Pin	Color	Size	Remark
182	A3-J2	7	DRV-A-J3	4	RED	20	25V
183	A3-J2	9	DRV-B-J3	4	RED	20	25V
184							
185							
186	A3-J2	24	A6-BUS	(-)	BLK	20	
187	A3-J2	12	A6-BUS	(-)	BLK	20	
188							
189							
190	PS5	-V	CHASSIS	GND	BLK	18	
191	PS6	-V	CHASSIS	GND	BLK	18	
192	A6-J1	2	A6-BUS	(+)	RED	20	+42V
193	A6-J1	5	A6-BUS	(-)	BLK	20	
194	A1-J4	6	CHASSIS	GND	BLK	22	
195	A1-J4	5	TB3	3	ORN	22	+15V
196	A1-J4	12	TB3	6	VIO	22	-15V
197	A1-J4	1	A6-BUS	(+)	RED	22	+42V
198	A2-J4	6	CHASSIS	GND	BLK	22	
199	A2-J4	5	TB3	1	ORN	22	+15V
200	A2-J4	12	TB3	4	VIO	22	-15V
201	A2-J4	1	A6-BUS	(+)	RED	22	+42V
202	DRV-A-J3	A1	A6-BUS	(+)	RED	12	+42V
203	DRV-A-J3	A2	A6-BUS	(-)	BLK	12	
204	DRV-A-J3	5	TB3	2	ORN	22	+15V
205	DRV-A-J3	3	TB3	5	VIO	22	-15V
206	DRV-B-J3	A1	A6-BUS	(+)	RED	12	+42V
207	DRV-B-J3	A2	A6-BUS	(-)	BLK	12	
208	DRV-B-J3	5	TB3	3	BRN	22	+15V
209	DRV-B-J3	3	TB3	6	VIO	22	-15V
210	HY2-J7	1	A6-BUS	(+)	RED	22	+42V
211	HY2-J7	14	A6-BUS	(+)	RED	22	
212	HY2-J7	22	CHASSIS	GND	BLK	22	
213	HY3-J7	1	A6-BUS	(+)	RED	22	
214	HY3-J7	14	A6-BUS	(+)	RED	22	
215	HY3-J7	22	CHASSIS	GND	BLK	22	
216	HPA 1-J3	A1	A6-BUS	(+)	RED	12	+42V
217	HPA 1-J3	A2	A6-BUS	(-)	BLK	12	
218	HPA 1-J3	5	TB3	1	ORN	22	+15V

Table 6-18 Cabinet Wire-Run List

Wire	From		To		TEFLON WIRE AWG		
Num	Sym No	Pin	Sym No	Pin	Color	Size	Remark
219	HPA 1-J3	3	TB3	4	VIO	22	-15V
220	HPA 2-J3	A1	A6-BUS	(+)	RED	12	+42V
221	HPA 2-J3	A2	A6-BUS	(-)	BLK	12	
222	HPA 2-J3	5	TB3	2	ORN	22	+15V
223	HPA 2-J3	3	TB3	5	VIO	22	-15V
224	HPA 3-J3	A1	A6-BUS	(+)	RED	12	+42V
225	HPA 3-J3	A2	A6-BUS	(-)	BLK	12	
226	HPA 3-J3	5	TB3	3	ORN	22	+15V
227	HPA 3-J3	3	TB3	6	VIO	22	-15V
228	HPA 4-J3	A1	A6-BUS	(+)	RED	12	+42V
229	HPA 4-J3	A2	A6-BUS	(-)	BLK	12	
230	HPA 4-J3	5	TB3	1	ORN	22	+15V
231	HPA 4-J3	3	TB3	4	VIO	22	-15V
232	HPA 5-J3	A1	A6-BUS	(+)	RED	12	+42V
233	HPA 5-J3	A2	A6-BUS	(-)	BLK	12	
234	HPA 5-J3	5	TB3	2	ORN	22	+15V
235	HPA 5-J3	3	TB3	5	VIO	22	-15V
236	HPA 6-J3	A1	A6-BUS	(+)	RED	12	+42V
237	HPA 6-J3	A2	A6-BUS	(-)	BLK	12	
238	HPA 6-J3	5	TB3	3	ORN	22	+15V
239	HPA 6-J3	3	TB3	6	VIO	22	-15V
240	HPA 7-J3	A1	A6-BUS	(+)	RED	12	+42V
241	HPA 7-J3	A2	A6-BUS	(-)	BLK	12	
242	HPA 7-J3	5	TB3	1	ORN	22	+15V
243	HPA 7-J3	3	TB3	4	VIO	22	-15V
244	HPA 8-J3	A1	A6-BUS	(+)	RED	12	+42V
245	HPA 8-J3	A2	A6-BUS	(-)	BLK	12	
246	HPA 8-J3	5	TB3	2	ORN	22	+15V
247	HPA 8-J3	3	TB3	5	VIO	22	-15V
248	HPA 9-J3	A1	A6-BUS	(+)	RED	12	+42V
249	HPA 9-J3	A2	A6-BUS	(-)	BLK	12	
250	HPA 9-J3	5	TB3	3	ORN	22	+15V
251	HPA 9-J3	3	TB3	6	VIO	22	-15V
252	HPA 10-J3	A1	A6-BUS	(+)	RED	12	+42V
253	HPA 10-J3	A2	A6-BUS	(-)	BLK	12	
254	HPA 10-J3	5	TB3	1	ORN	22	+15V
255	HPA 10-J3	3	TB3	4	VIO	22	-15V

Table 6-18 Cabinet Wire-Run List

Wire	From		To		TEFLON WIRE AWG		
Num	Sym No	Pin	Sym No	Pin	Color	Size	Remark
256	A5-J3	2	TB3	2	RED	12	+42V
257	A5-J3	5	TB3	5	BLK	12	
258	FL1-J3	1	CHASSIS	GND	ORN	22	+15V
259	FL1-J3	5	TB3	3	RED	20	
260	A3-J2	20	A6-BUS	(+)	RED	20	
261	A3-J2	21	K1	2	RED	20	
262	A3-J2	13	K1	4	RED	20	
263	A3-J2	25	K1	3	RED	20	IN4148 CAÜ K1-2
264	A6-BUS	(+)	K1	1	RED	20	IN4148 ANÜ K1-7
265	K1	1	K1	8	RED	20	
266	K1	3	K1	6	RED	20	
267	K1	4	K1	5	RED	20	
268	TB3	1	P1	4	ORN	22	FAN TRAY (87)
269	CHASSIS	GND	P1	5	BLK	22	
270	CHASSIS	GND	P1	6	GRN	20	A/C WIRE
271	TB3	2	S4	(+)	ORN	22	
272	CHASSIS	GND	S4	(-)	BLK	22	
273	P2	1	S1	L	WHT	22	
274	P2	2	S2	L	WHT	22	
275	P2	3	S3	L	WHT	22	
276	P2	4	S1	(+)	ORN	22	
277	P2	5	S1	(-)	BLK	22	
278	S1	(+)	S2	(+)	ORN	22	
279	S2	(+)	S3	(+)	ORN	22	
280	S1	(-)	S2	(-)	BLK	22	
281	S2	(-)	S3	(-)	BLK	22	
282	P2	7	P3	1	WHT	22	
283	P2	8	P3	2	WHT	22	
284	P2	9	P3	3	WHT	22	
285	P2	10	P3	4	WHT		P1-10 PIN (F) JJ0352
286	B1	A	P8	1	GRAY	18	P2-10 PIN (M)PP0258
287	B1	B	P8	4	WHT	18	
288	B2	A	P8	2	GRAY	18	P3-6 PIN (F) PP0171
289	B2	B	P8	5	WHT	18	P4-6 PIN (M) PP0170
290	B3	A	P8	3	GRAY	18	
291	B3	B	P8	6	WHT	18	P5-6 PIN (F) PP0171
292	P2	6	CHASSIS	GND	GRN	20	P6-6 PIN (M) PP0170

Table 6-18 Cabinet Wire-Run List

Wire	From		To		TEFLON WIRE AWG		
Num	Sym No	Pin	Sym No	Pin	Color	Size	Remark
293	TB3	3	S5	(+)	ORN	22	
294	CHASSIS	GND	S5	(-)	BLK	22	
295	TB3	1	S6	(+)	ORN	22	
296	CHASSIS	GND	S6	(-)	BLK	22	
THE FOLLOWING LISTS THE CONNECTOIZATION OF THERMAL DETECTORS A7 AND A8							
1	A7	E1	P4	1	YEL	22	P7- 6 POS (F) JJ0351
2	A7	E2	P4	2	WHT	22	P8-6 POS (F) PP0257
3	A7	E3	P4	3	WHT	22	
4	A7	E4	P4	4	BLK	22	
1	A8	E1	P6	1	YEL	22	
2	A8	E2	P6	2	WHT	22	
3	A8	E3	P6	3	WHT	22	
4	A8	E4	P6	4	BLK	22	

THIS PAGE INTENTIONALLY LEFT BLANK

7 449 MHz Antenna

The 449 MHz Co-Axial Co-Linear antenna was developed and manufactured by Lockheed Martin for the use on the NOAA Wind Profiler 449 systems. The antenna has two existing configurations. A three-beam system designed for general use as a standard configuration and a five- beam system was developed for special purpose. The five-beam system is used at Vandenberg Air Force Base. Both systems are identical with the exception to the beam steering unit.

Normally the array antenna transmit 3-beams (Vertical, North, and East): however a five-beam system also includes two more beams (West and South). Vertical beam has a 90 elevation angle while the scanned beams (N, S, W, E) are at approximately 74 elevation. The system achieves 32 dB gain of transmitted signal over the 2 MHz Bandwidth with approximately 4 beamwidth.

All electronics and active devices are located within the shelter, while special attention was given to all passive, externally located devices to protect from any harsh environment conditions for the increased reliability and system life.

Organization of Section

Section 7.1 Theory of Operation provides a functional description of the overall 449 MHz antenna.

Section 7.2 Physical Description, provides physical description of the antenna structure and individual components.

Section 7.3 Operation provides operating of the 3-beam and the 5-beam antennas as well as PMT/system monitoring.

Section 7.4 Preventive and Corrective Maintenance, provides maintenance procedures for system VSWR and probing, as well as test equipment listing to perform these procedures.

Section 7.5 LRU replacement Procedures, provides procedures to replace any of the antennas LRU.

Section 7.6 Cable and Wire Listing, provides cables "from" - "to" listing of both 3-beam and 5-beam antennas and Beam Steering Units connectors pin outs as well as useful Cable and Power divider tables and System Schematic diagrams.

Section 7.7 Provides a listing of Acronyms used in this chapter.

7.1 Theory Of Operation

Antenna Functional Description

The wind profiler antenna subsystem employs coaxial co-linear elements to achieve the required antenna performance. No devices are located in the open environment thus a highly reliable design. Antenna performance parameters are shown in Table 7-1.

Table 7-1 Antenna Performance Parameters

Frequency	449.0 MHz -/+MHz
One-way 3 dB beamwidth (all beams)	$\leq 4^{o}$
One-way peak side-lobe levels (all beams)	
For elevation angle -/>45 degrees	< -20 dB relative to
For 5 < elevation angle <45 degrees	< -25 dB on axis
For elevation angle </- 5 degrees	$\leq$ - 40 dB beam peak
On-axis gain above isotropic	$\geq$ 32 dB
Number of beams	3 or 5
North, South, West, and East beam elevation angles	73.64^{o}
Vertical beam elevation angle	90.0^{o}
Beam Switching Speed	$\leq$ 0.03 seconds
Beam switching pointing error from nominal position	
Elevation (0)	$\pm 0.3^{o}$
Azimuth (0)	$\pm 0.5^{o}$
Input VSMR	< 1.2:1 max at Band Center
	< 1.4:1 max at Band Edges

The antenna system is formed from two coaxial co-linear arrays arranged orthogonal to each other to form a Vertical, a North and an East beam for the 3-beam system and additional South and West beams for a 5-beam system. Each array is formed from 20 rows of coaxial co-linear array subassemblies fed by a 5:1, 4:1, and 3:1 or 2:1 power dividers. These dividers with a row spacing of 0.71 wavelength enables the generation of a scanned beam to 18.36 degrees off axis with only two sets of five discrete power feed cables as phase delay cables. The 5-beam system has 3 set of these power feed cables. A block diagram of the antenna system is shown in Figure 7-1.

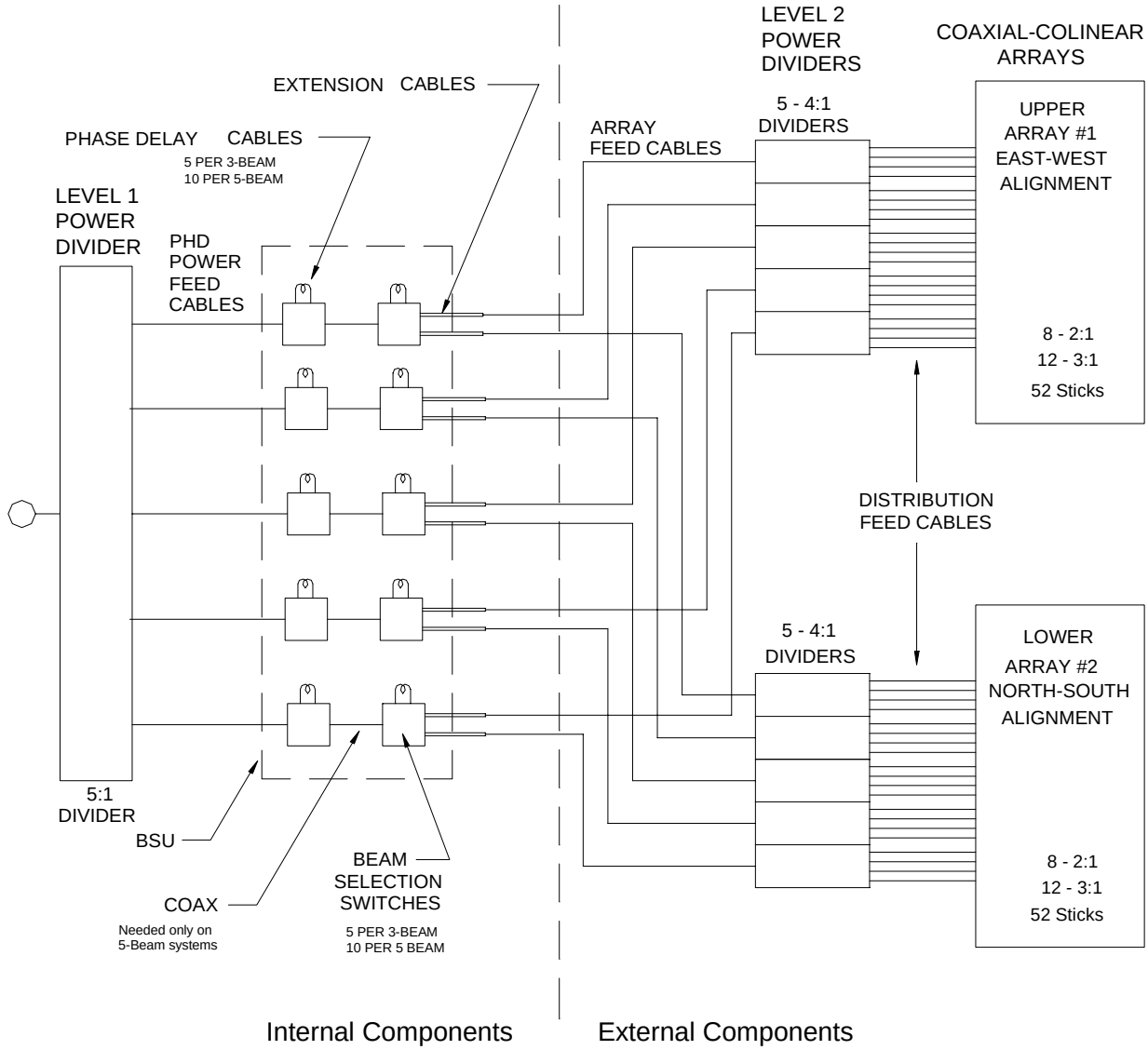

Figure 7-1 Antenna Block Diagram

Physically, the two arrays occupy an area 40 feet by 40 feet. A ground plane formed by corrosion-resistant expanded steel mesh is positioned a quarter wavelength below the arrays on a 40 by 40 foot frame (see Figure 7-2). The ground plane is located on a steel jointed structure approximately 3.5 feet above the ground to minimize the effect of snow accumulation and to facilitate installation and repair.

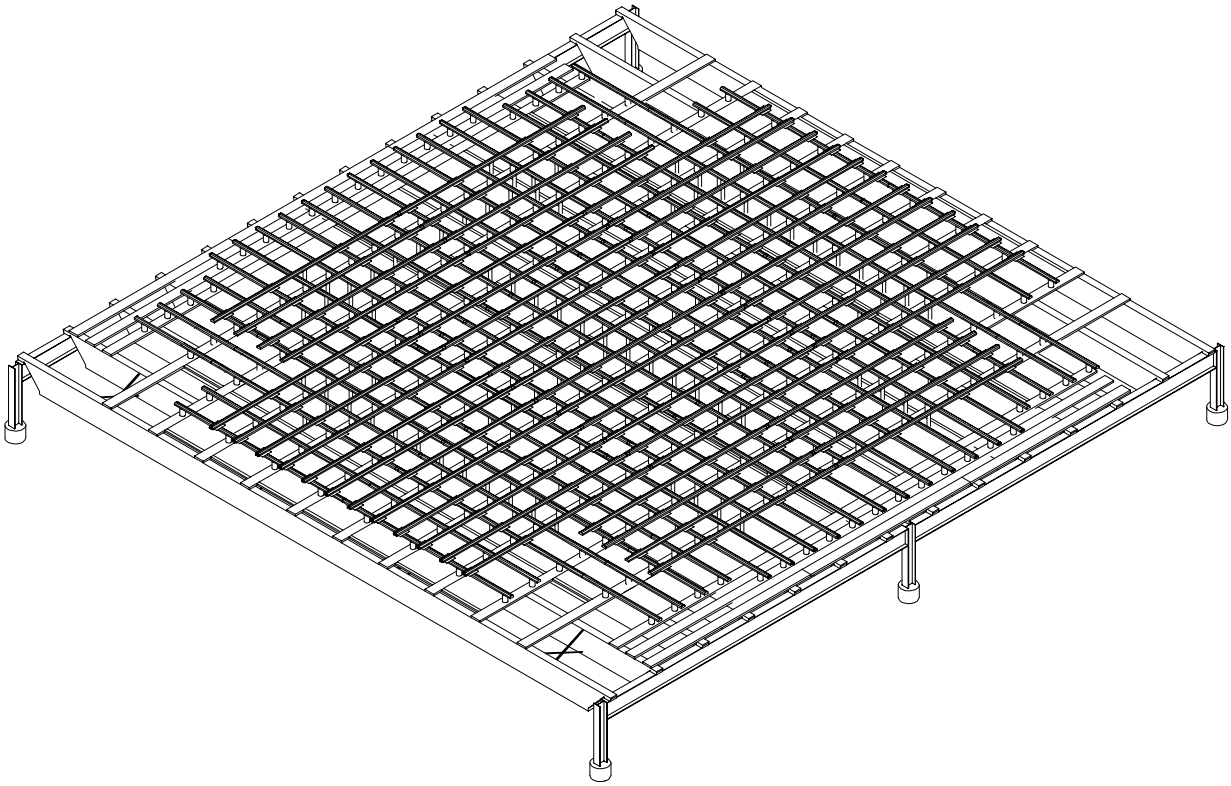

Figure 7-2 449 MHz Co-Co Antenna Structure

The power divider networks are connected to appropriate co-axial co-linear assemblies via 0.5-inch diameter, low-loss foam dielectric coaxial cables. The power dividers are weather sealed assemblies located below the array. 37.5-foot lengths of 7/8-inch diameter coaxial foam dielectric cable connect the power dividers with beam selection switches located in the equipment shelter

The beam select switch is formed using a SPDT transfer and one (3-beam system) or two (5-beam system) DPDT transfer switch to interconnect the two arrays with a 5:1 divider. The switches not only select the array to be excited but also provide the phase delay required to scan the beam.

7.2 Physical Description

Antenna System

The antenna system consists of RF subassemblies including: 5:1 power divider, Beam Selection Unit Assembly (BSU), Cables (PHD power feed, Phase Delay, Extension, array feed, distribution feed, row distribution) 4:1, 3:1, 2:1 power dividers and the co-

axial co-linear assemblies called sticks. The 5:1 divider, BSU, PHD cables and extension cables are located in the shelter inside the BSU Cabinet (see Figure 5-2).

7.2.1 Antenna System Physical Layout

The antenna system is located externally to the electronics shelter within the site perimeter fence. The antenna structure consists of a steel joint structure, which measures 40 feet by 40 feet and 3.5 feet above the ground (see Figure 7-2). Upon the joint structure lies a hot dip galvanized steel ground plane and extruded aluminum ground plane rails which are bolted to the steel joists of the antenna structure. Two arrays orthogonal to each other are supported by radome stanchions mounted to the ground plane rails and maintain approximately quarter wavelength distance from the ground plane (see Figure 7-3). Each array is made up of 20 rows of two-section and three-section array subassemblies. Located below the ground plane various 4:1, 3:1, and 2:1 power dividers feed the 20 rows of both antenna arrays via precise foam dielectric co-axial cable.

7.2.1.1 I-Beam Framework

The frame is consists of a twelve-joint (on modified 404 MHz radar) of a fourteen-joint (on new 449 MHz radar) steel structure which measures 40 feet by 40 feet. Upon the joint structure lies a hot dip galvanized steel ground plane and extruded aluminum ground plane rails which are bolted to the steel joists of the antenna structure. As shown in Figure 7-2 and Figure 7-3.

7.2.1.2 Ground Plane

The ground plane is hot dip galvanized mesh screen bolted to the antenna steel structure via aluminum ground plane rails. This ensures continuity and corrosion resistance. The ground plane is spaced approximately quarter of a wavelength below the lower co-axial co-linear array as shown in Figure 7-3.

7.2.1.3 Antenna System Co-Co Array Layout

The antenna consists of two separate arrays above the ground plane. Each array, orthogonal to each other, consists of 52 sticks. Arranged in 20 rows of two-section and three-section array subassemblies. The spacing is 0.71 wavelength between each of the 20 rows on both arrays (see Figure 7-4). This arrangement along with the specified power levels to each of the 52 sticks allows the antenna to meet the performance stated in Section 2 of this manual. The lower array forms the North and Vertical beams of a

three beam system and the North, South and Vertical beams of a five-beam system. The upper array forms the East beam of a three-beam system and the East and West beams of a five-beam system. Each array uses 8 rows containing 2-section array subassemblies and 12 rows containing 3-section array subassemblies. The numbering system, style location and orientation of the lower and upper arrays are shown in Figure 7-5 and Figure 7-6 respectively.

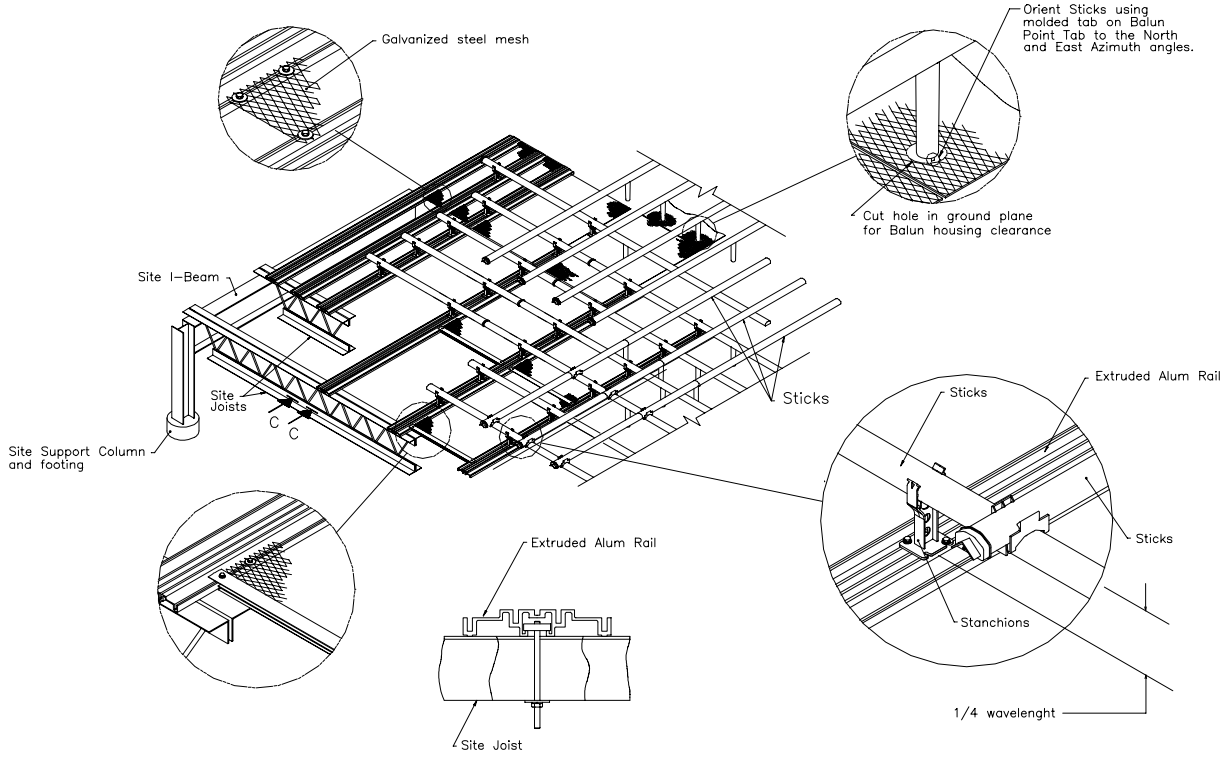

Figure 7-3 Antenna Construction and Mounting

7.2.1.4 Dual Co-Co Array Feed Network

Located within the electronics shelter is the beginning of the antenna system, a 5:1 power divider feeds the beam scan/beam select switches within the BSU. The external antenna is feed by ten array feed cables (five per array). The array feed cables interface with the BSU switches via extension cables. All the array feed cables are fed to a specific 4:1 power divider, which determines the power fed to each of the rows in the upper and lower arrays. Each 4:1 power divider feeds every fifth row of an antenna array via distribution cables to the specified 2:1 and 3:1 then to appropriate row of an array. The 2-section and 3-section rows of an antenna arrays are fed via 2:1 and 3:1 power dividers, as shown in Figure 7-10. See Section 7 for cable lengths and locations.

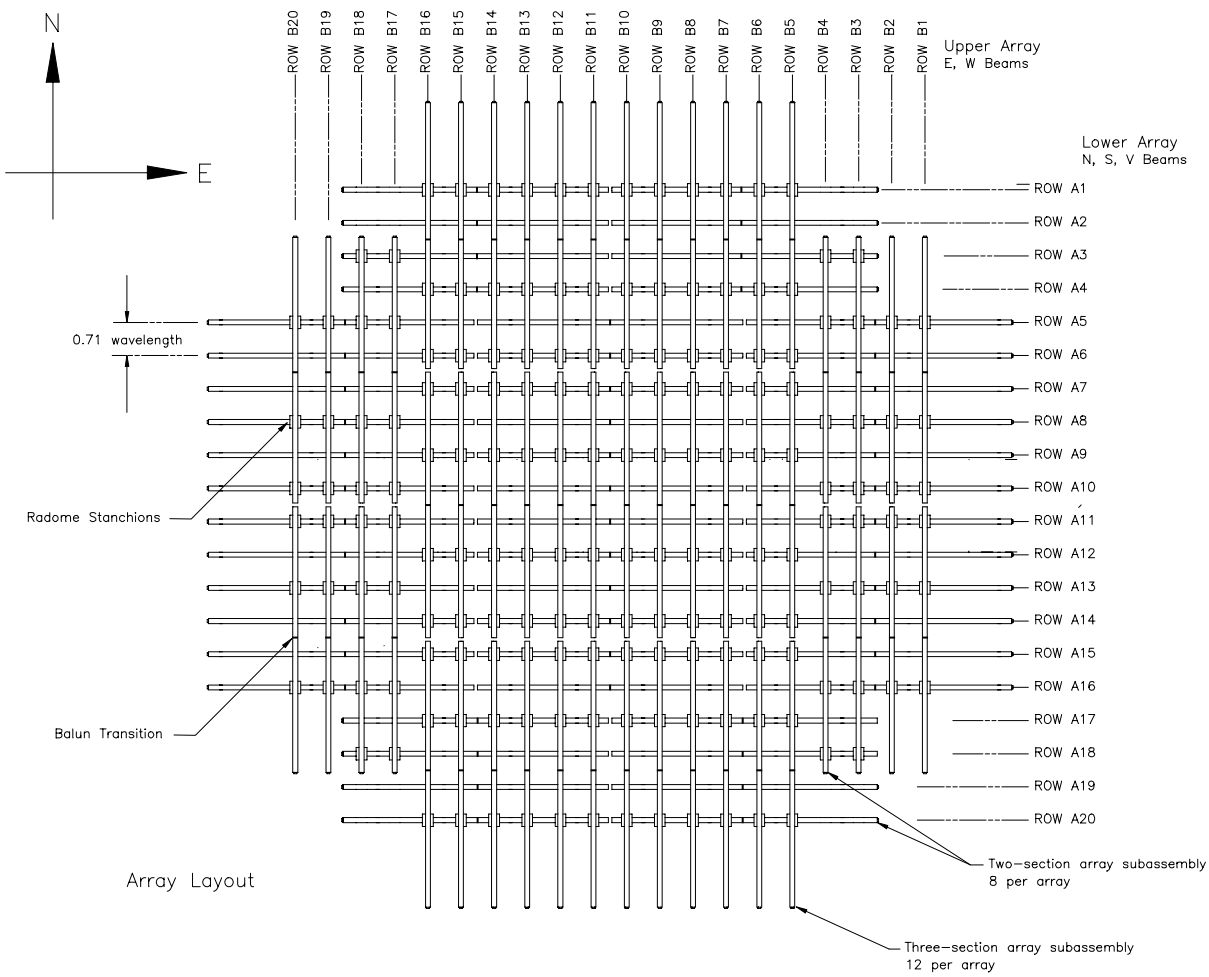

Figure 7-4 Orthogonal Co-Co Antenna Array Layout

7.2.1.5 Co-axial Co-linear Antenna Element Assemblies (Sticks)

As one of the distinctive features of the 449 MHz wind profiler antenna for the previous 404.37 MHz antenna, a single type of co-axial co-linear assemblies (sticks) are used throughout the entire arrays simplifying the stick design. A stick consists of 12 co-axial elements. The co-axial dipole elements are formed from sections of high-impedance co-axial cable, each a half-wavelength in the co-axial line as shown in Figure 7-7. The completed coaxial 12-element subassembly is packed within a cylindrical modified radome. The radome provides protection and forms a weather-tight seal around the elements. The completed 3-section array assembly is approximately 40 feet long.

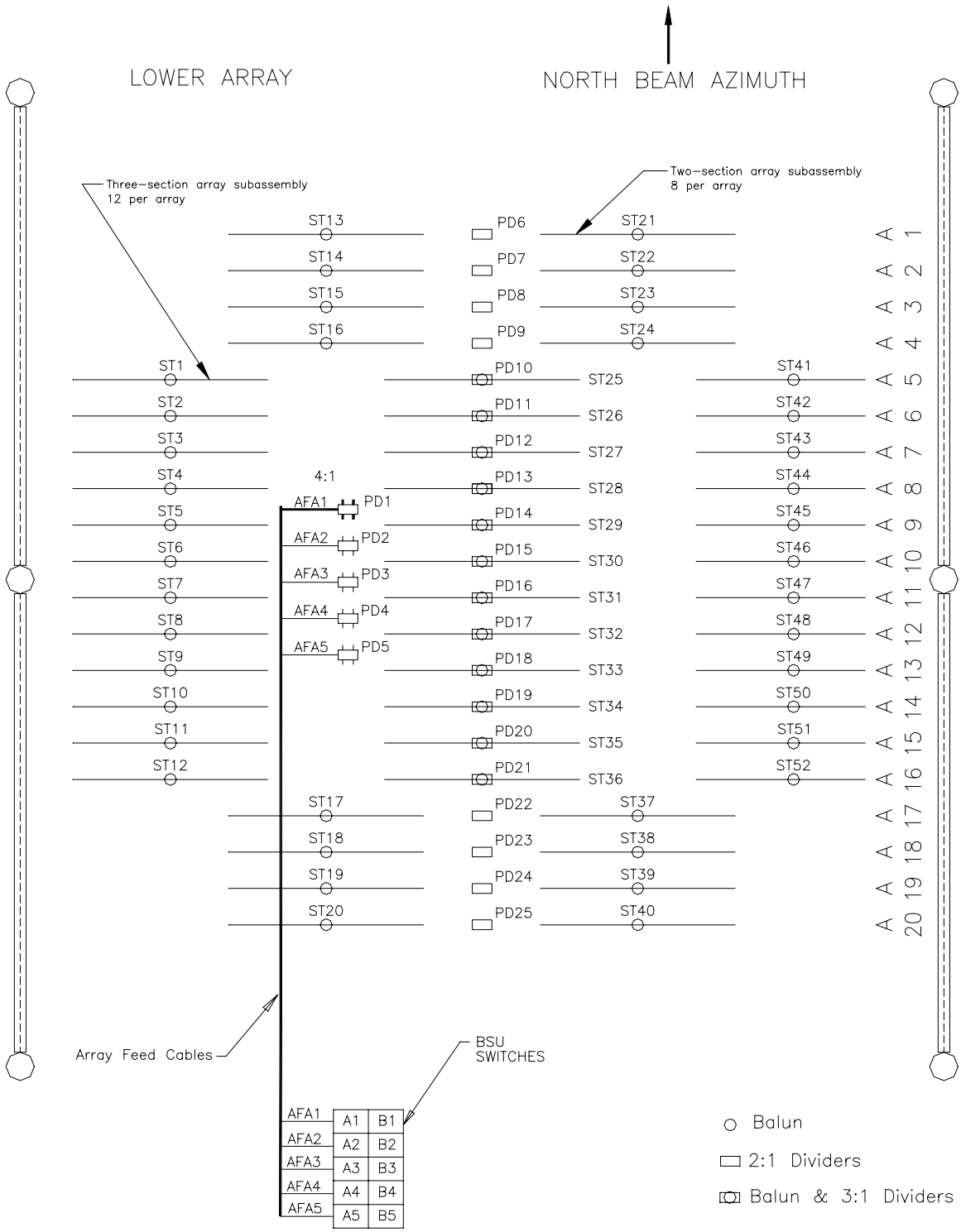

Figure 7-5 Lower (North) Antenna Array Configuration

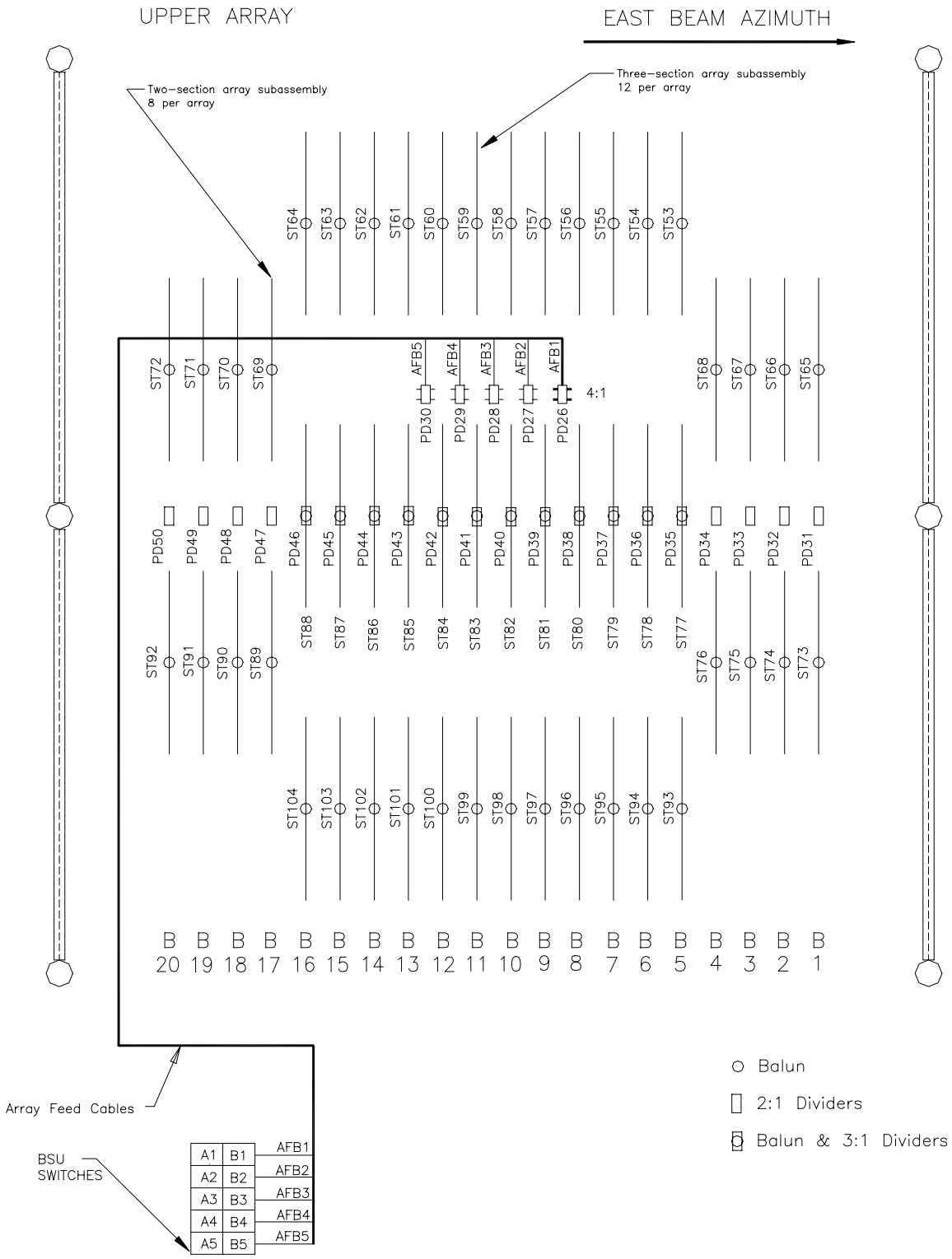

Figure 7-6 Upper (East) Antenna Array Configuration

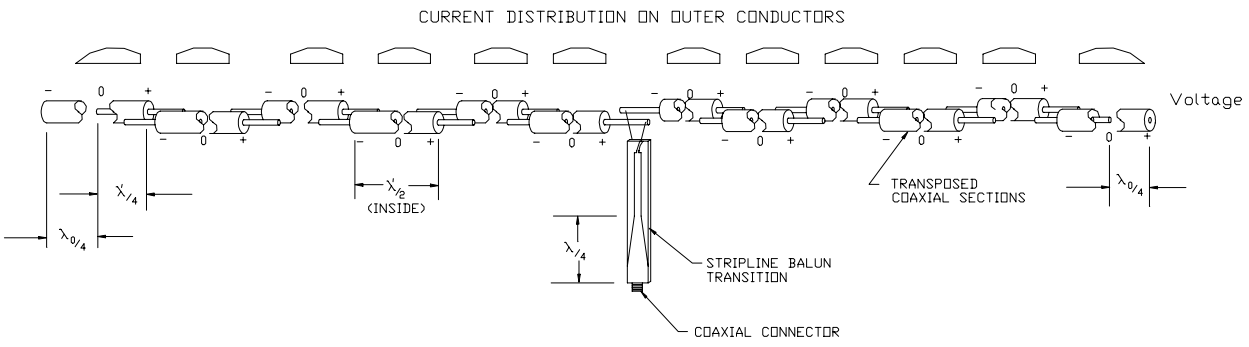

Figure 7-7 Co-axial Co-linear Antenna Element Assemblies (Sticks)

7.2.1.6 Two-to-One Power Divider

The 2:1 power divider is a simple reactive tee with a built-in matching co-axial transformer tuned to the operating frequency. Standard type-N connectors are used on both input and out puts. The power split is -3 dB to each output port and equal is phase. The 2:1 power divider is shown in Figure 7-8.

7.2.1.7 Three-to-One Power Divider

The 3:1 power division is obtained by 3 branch 3 wavelength/4 co-axial transformer section with the inner conductor sizes set to obtain the required impedance, Standard type-N connectors are used on both inputs and outputs. The power division of the 3:1 power divider is -3 dB to the center output port and -6dB to the left and right ports. The phase is equal to all ports. The 3: 1 power divider is shown in Figure 7-8.

7.2.1.8 Four-to-One Divider

The 4:1 divider is a series feed coupler. The space between the inner and outer conductors is dielectric loaded with Teflon. Thus condensation of water vapor will not accrue within the unit, obviating the need for a separate protective housing. Typical insertion loss is less than 0.1 dB. The table below lists the power split percentage of the three styles used in the system in dB. The 4:1 power divider is shown in Figure 7-8.

Connector	Style 1	Style 2	Style 3
J2	10.8%	6.3%	10.5%
J3	19.1%	15.9%	39.5%
J4	24.6%	34.2%	39.5%
J5	45.5%	43.6%	10.5%

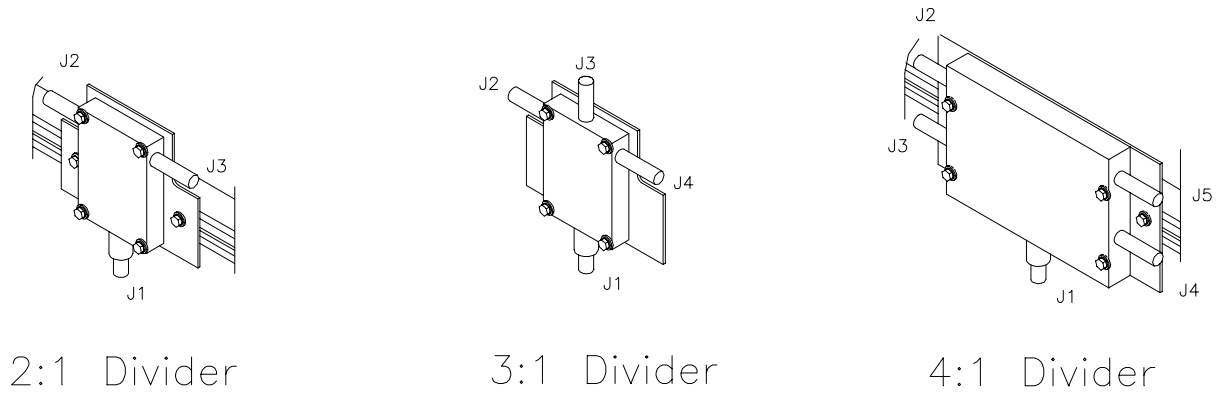

Figure 7-8 2:1, 3:1, and 4:1 Power Divider Assemblies

7.2.1.9 Five-to-One Power Divider

This co-axial divider designed for operation at the design frequency. A reactive co-axial network design is employed to obtain minimum loss. The RF input is located at the top of the divider using a 1 5/8-inch EIA input connector. The power split is obtained via a 1:5 impedance transformation that is implemented by proper selection of conductor diameters. The RF output among all five-output ports is equal in both phase and amplitude. The 5:1 power divider is show in Figure 7-9.

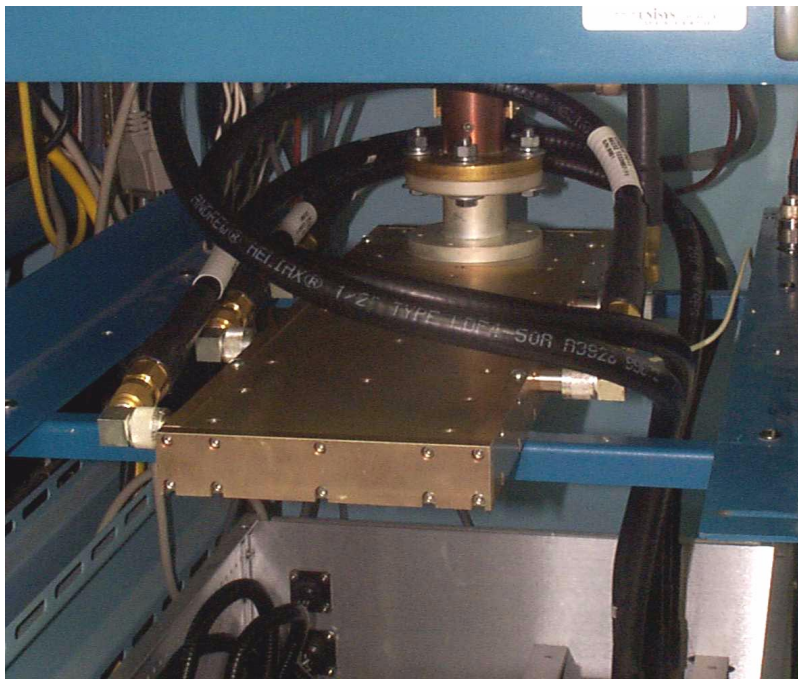

Figure 7-9 5-Way Power Divider

7.2.1.10 Array Feed Cables

Array feed cables are used to interconnect the output from the BSU switches to the 4:1 power dividers using the extension cables as stress relieve. Both the three and five-beam systems contain a set of ten array feed cables which are approximately 35 feet in length and 7/8 inch diameter. These are low-loss helix cables and phase matched to -/+3 degrees. Five cables feed each array. They are numbered A1 though A5 for the lower array and B1 through B5 for the upper array. See Section 7.6 for cable lengths and locations.

7.2.1.11 Distribution Feed Cables

Distribution Deed (DF) cables are then used to interconnect the 4:1 dividers with the 2:1 or 3:1 divider which feeds the 2-section or 3-section array subassemblies Each 4:1 contains a matched set of four different distribution cables (2 ea. DF4 and 2 ea. DF7) these cables must be configured as referenced in Section 7.6 of this manual to ensure proper antenna radiating pattern. These cables are ½ inch helix cables of various length and phase progression. See Section 7.6 for cable lengths and locations. Each antenna system contains the following distribution cables

Cable type	Quantity per Array	Quantity per system
DF4	10	20
DF7	10	20

7.2.1.12 Row distribution feed cables

These cables interconnect the 3:1 and 2:1 to the sticks. The 2:1 uses two of the DF10 and the 3:1 uses two of the DF11. The 3:1 is connected directly to one of the sticks (see Figure 7-10). These cables must be configured as referenced in Section 7.6 to ensure proper antenna radiating pattern. These cables are ½ inch helix cables of various length and phase progression. See Section 7.6 for cable lengths and locations. Each antenna system contains the following row distribution cables

Cable type	Quantity per Array	Quantity per system
DF10	16	32
DF11	24	48

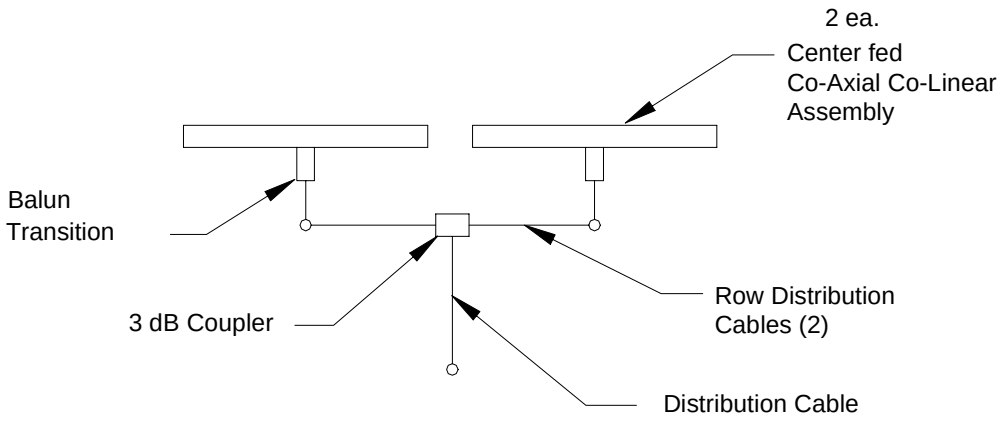

Two-section array subassembly

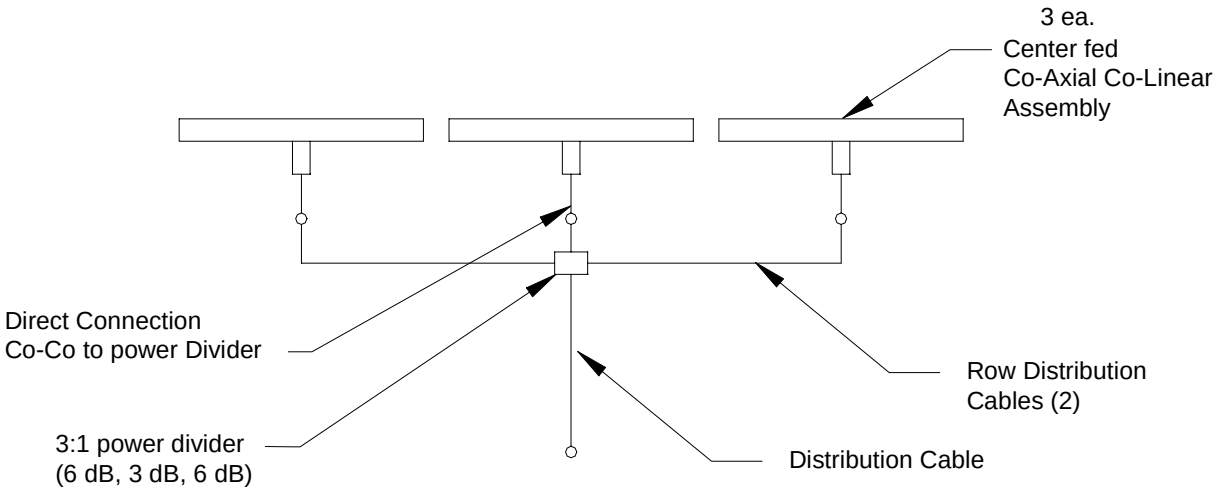

Three-section array subassembly

2 Styles of Array Subassemblies

Figure 7-10 Row Distribution Feed Cables

7.2.1.13 Waterproofing Cable Connections

Antenna power dividers are weatherproof. All antenna cable connections external to the shelter are weatherproofed by one of two different methods. The first uses specified sized cold shrink" rubber tubing manufactured by 3M which is fitted over the mating connectors. Figure 7-11 shows a typical application of the cold shrink match. The second method is used in two places when the cold shrink method is inappropriate, (at the AF cable entering the 4:1 power divider, and at the direct connections between the 3:1 power divider center ports and antenna sticks). This method first applies a layer of "self-vulcanizing" mastic tape manufactured by 3M, followed by two layers of electrical tape, followed by a layer of Scotch-Kote™ electrical coating. The electrical coating prevents unraveling of the tape and provides additional sealing for the connection.

7.2.2 Beam Steering Unit (3-beam)

The Beam Steering Unit (BSU) shown in Figure 7-12 is for the 3-beam system. Identical to the 404 MHz BSUs with the exception of a modified electronics control card to incorporate a new relay fault monitoring card and a phase delay cable set matched for proper phase progression at 449 MHz. The BSU includes a set of five (5) Beam Sector Switches which contains a SPDT (RY1) and a DPDT (RY2) relay set. The switch relays are controlled via the electronics card and monitored by the fault locator card. Voltages of +28 Vdc (relay) and +5 Vdc electronics as will as +60 Vdc, -5Vdc (T/R switch connector) are supplied by the Wind Profiler System. Two bit T/C pair control signals and two bit T/C pair fault signals are interfaced via another system connector. Figure 7-13 shows the beam selector switch and its accompanying schematic diagram.

7.2.2.1 Beam Steering Unit (5-beam)

A five-beam BSU chassis was developed to be a stand-alone chassis, independent of the radar system with the exception of control and fault signals. This chassis not only provides two additional beams (West and South) but also contains its own independent 28 Vdc and 5 Vdc sources. The +24Vdc supply is of the switching type for minimized size and increased capacity. It is supplied by a 115 Vac connector (J1) at the rear of the chassis. +5 Vdc is supplied to the electronics control cards (two Modified) and fault locator cards (two) via a 28V-to-5V DC-AC connector. Control and fault signals are interfaced at connector J2. In addition to the beam selector switch set (five) which contains RY1 and RY2 relays and is found in the three beam unit design, the five-beam unit additionally incorporates another DPDT relay set (five) which provides the capability to add an additional phase delay cable set for the West and South beams via RY2.

1. Position 3M™ Cold Shrink™ assembly on cable or wire prior to connecting.

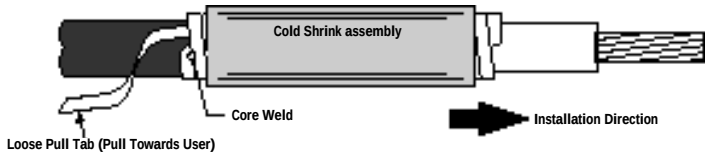

2. Make connection and clean cable insulation 2" (5 cm) minimum.

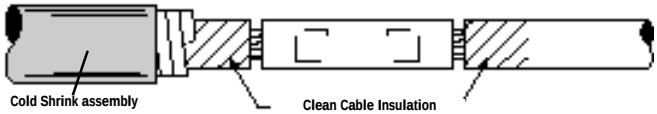

3. Locate Cold Shrink Assembly at desired starting point, position assembly 1-1/2" to 2" (3.8 to 5 cm) beyond end of connector.

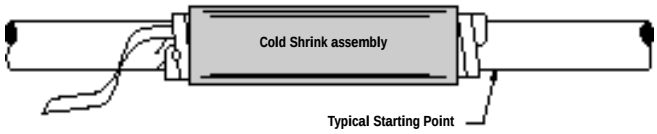

If installing on a lug, slide over lug to position indicated and unwind core.

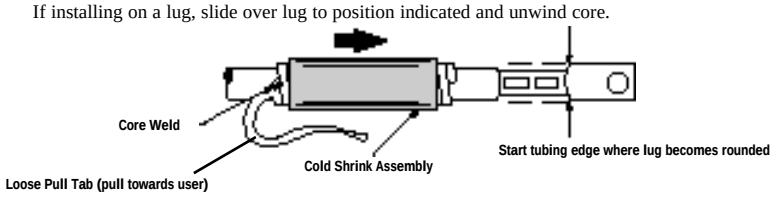

4. Pull loose pull tab gently while unwinding in a counter-clockwise direction.

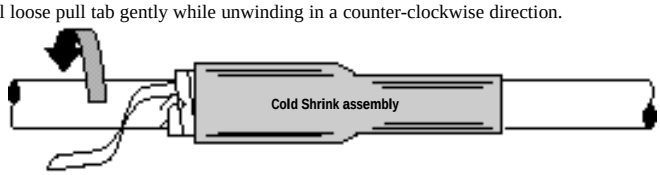

5. Installation is now complete.

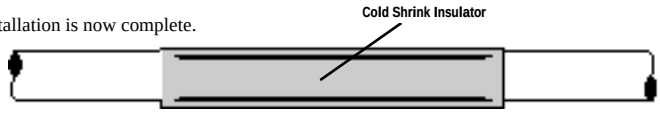

3M Cold Shrink removable core material is polypropylene and recyclable with other waste.

Figure 7-11 Cold-Shrink Tubing Installation Procedure

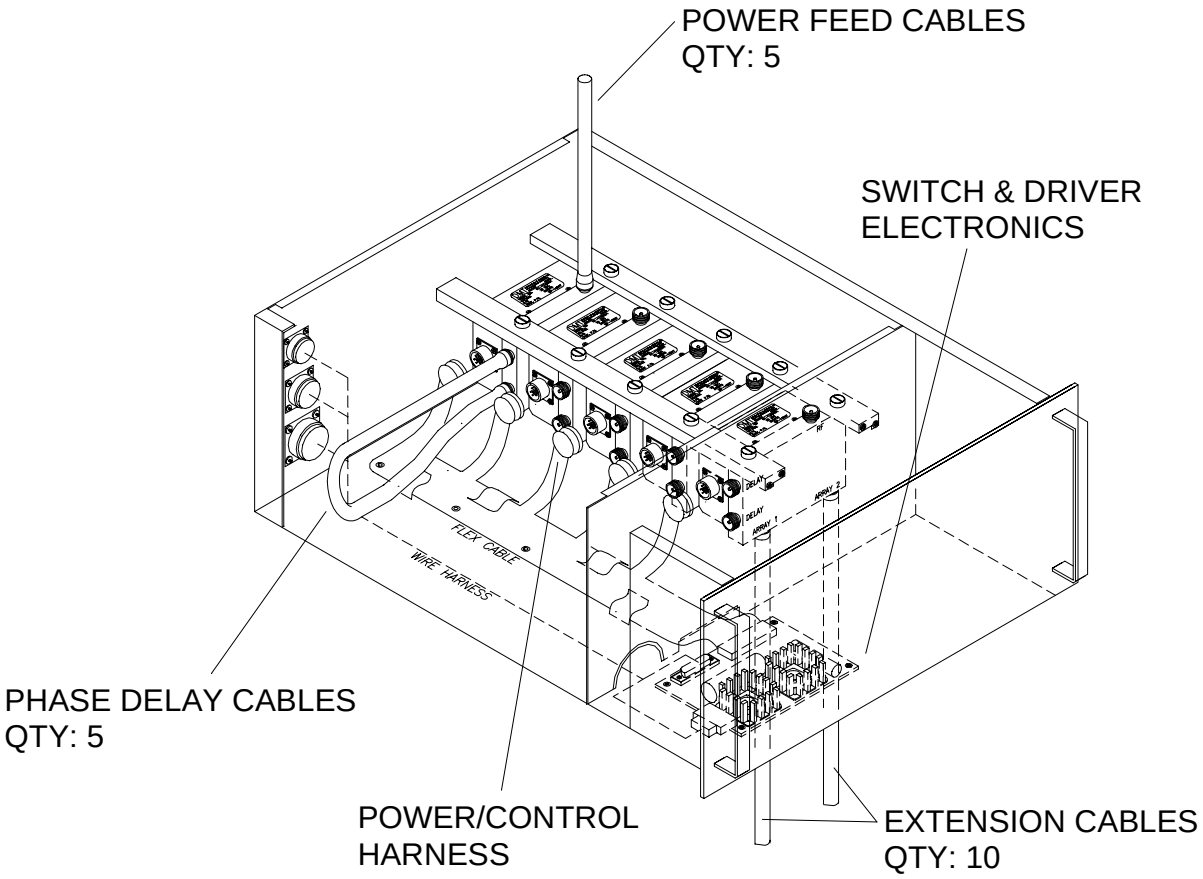

Figure 7-12 Beam Steering Unit (BSU) Assembly

7.2.2.2 Phase Delay Cables

The BSU contain a precise phase cable set that match the phase progression of the BSU switches to 0, +72, and -72. These cables have lengths set to generate scanned beam phase gradient (multiples of wavelength/5, 4.6" with Vp = 0.87) and are phase matched within ± 2 degrees.

A three beam BSU contains a phase delay cable set numbered PHD-5,PHD-4, PHD-3, PHD-2, PHD-1. Their appropriate switch connection ports are shown in Section 7.6.

A five beam BSU contains a phase delay cable set (PHD-5, PHD -4,PHD -3,PHD -2,PHD -1) and another phased cable set for -72 phase progression is also included and numbered PHD-1,PHD -3,PHD PHD-5, PHD -6,PHD -7. See Section 7.6 for cable lengths and locations.

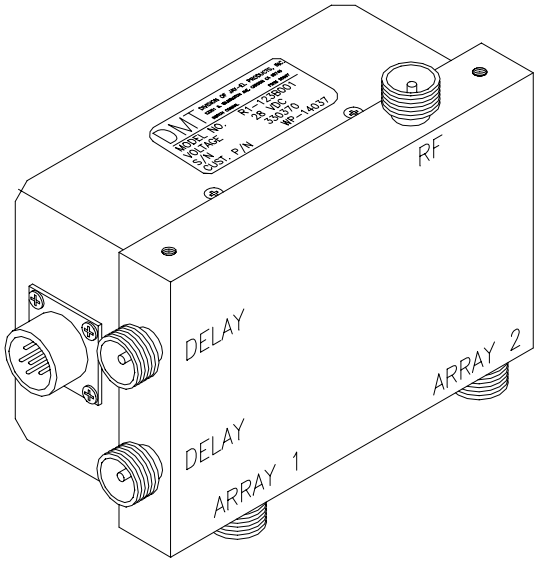

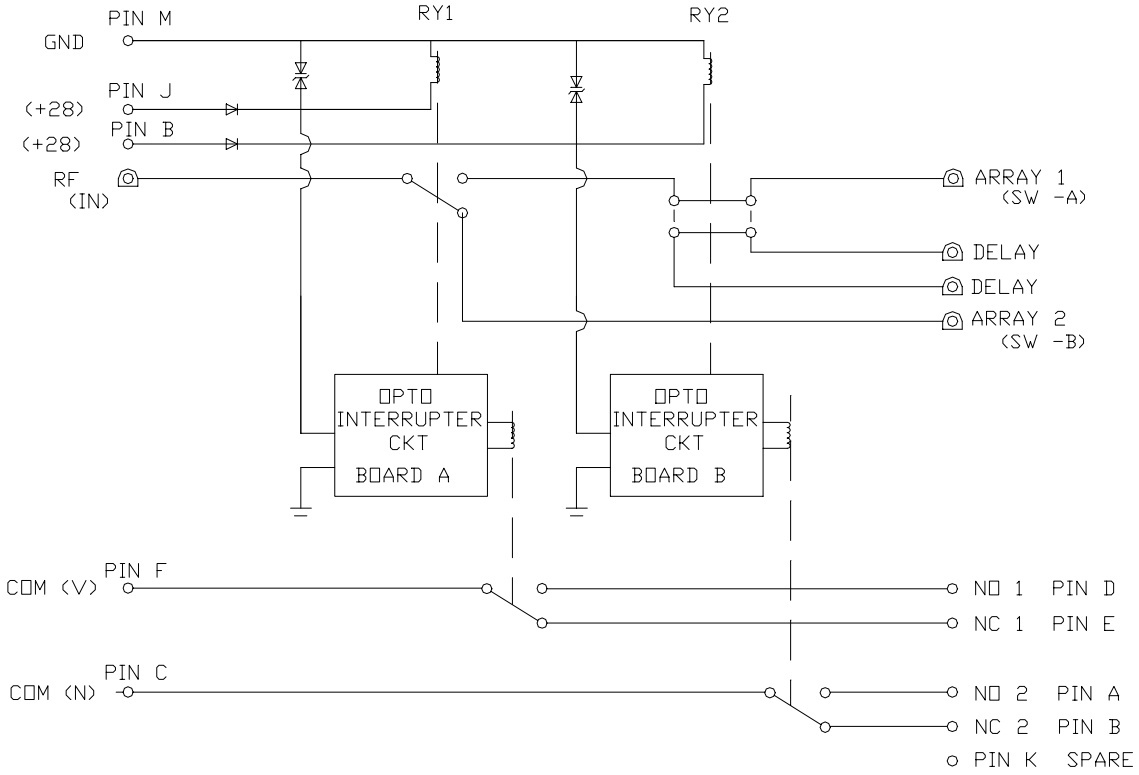

Figure 7-13 BSU Coaxial Switch Assembly

7.2.2.3 Power Feed Cables

Power feed cables are used to interconnect the output for 5:1 power divider to the BSU switches on both (3 and 5-beam) systems. They are the Phased Delay cables numbered PHD-8,PHD-9, PHD-10, PHD-11, PHD-12. These are identical to the phased delay cables in the BSU. See Section 7.6 for cable lengths and locations.

7.2.2.4 Extension Cables

Interfacing the BSU switches and the ten power feed cables is a set of phased-matched RG-214 extension cables. These cables are approximately one foot in length and serve to relieve stress on the BSU switch connectors as well as relieving any vibrations from the antenna system through the feed cables caused by personnel atop the antenna structure during maintenance periods.

7.3 Operations

7.3.1 Beam Switching Command Signals and Status Signals

Once the Wind Profiler System has booted up all software and performed its own self-checks, commands are issued to the beam steering unit for appropriate positions. These signals are shown in Figure 7-14. At the same time the status signal from the beam steering unit are monitored by the Wind Profiler System. These signals are shown in Figure 7-15. All signals are (true/compliment) T/C pairs.

C-C	C-T	B-C	B-T	A-C	A-T	Beam
1	0	1	0	1	0	Zenith "Vertical"
1	0	1	0	0	1	Oblique 1 "East"
1	0	1	1	1	0	Oblique 2 "North"
1	0	0	1	0	1	Zenith "Vertical"
0	1	1	0	1	0	Zenith "Vertical"
0	1	1	0	0	1	Oblique 3 "West"
0	1	0	1	1	0	Oblique 4 "South
0	1	0	1	0	1	Zenith "Vertical"

3-Beam

5-Beam

3-Beam

5-Beam

Figure 7-14 BSU Control Command Signals

AF1-C	AF1-T	AF0-C	AF0-T	Status
1	0	1	0	Pass
0	1	0	1	Fail

Figure 7-15 BSU Status Signals

7.3.2 Resulting Beam (3 and 5-beam system)

Each antenna contains five beam select switches, which scan the beam to the three or five desired positions. Each beam select switch consists of two relays (RY1 and RY2) for a three-beam system as shown in Table 7-2 and three relays (RY1, RY2 and RY3) for a five-beam system as shown in Table 7-3. The RY1 relay selects the desired array to be excited and the bypass relay RY2 and RY3 selects either no phase delay or the phase gradient to scan the beam. The switches are matched to a 50-ohm transmission system for input, and delay ports. The delays are provided by matched sets of cables, cut to have a length gradient of one-fifth of the wavelength per switch.

Table 7-2 3-Beam BSU Assembly Phase Progression

RY1	RY2	Phasing Progression	Beam Result
Not Energized	Not Energized	72°	Oblique 1 - **East** Upper Array Scanned Array 2
Not Energized	Not Energized	72°	Oblique 2 - **North** Lower Array Scanned Array 1
Energized	Not Energized	0°	Zenith - **Vertical** Lower Array Not Scanned Array 1

Table 7-3 5-Beam BSU Assembly Phase Progression

RY1	RY2	RY3	Phasing	Beam Result
Not Energized	Not Energized	Not Energized	72°	Oblique 1 - **East** Upper Array Scanned - Array 2
Energized	Not Energized	Not Energized	72°	Oblique 2 - **North** Lower Array Scanned - Array 1
Not Energized	Not Energized	Energized	-72°	Oblique 3 - **West** Lower Array Scanned - Array 2
Energized	Not Energized	Energized	-72°	Oblique 4 - **South** Lower Array Scanned - Array 1
Energized	Energized	Not Energized	0°	Zenith - **Vertical** Lower Array Scanned Array 1

7.3.3 Phase Scan Technique

When the relay RY1 selects Array #2 of a three beam system as shown in Figure 7-16, the power feed cables provide a phase progression resulting in a scan beam. The phase shift cables have a phase progression exactly equal to the power feed cables. However the progression sequence is exactly reversed from that of the power feed cables. When the relay RY1 has selected Array #1 and the relay RY2 inserts the phase cables, the final phase progression is zero and the beam is directly vertical. For a five beam system the vertical beam is formed when RY2 inserts and RY3 bypasses phase cables with RY1 in the lower array position. The North or the South beam is selected depending on RY3 inserting or bypassing phase shift cables with RY2 in the bypass state. With RY1 in the upper array position the state of RY3 determines the East of the West beam. See Figure 17 Auxiliary contacts on the relay are used to indicate the actual switch position to the BITE system. Figure 24 depicts the Phase Scan Technique.

7.3.4 System Monitoring

Two significant antenna parameters are monitored by the Wind Profiler System (VSWR fault & BSU fault). The first, Voltage Standing Wave Ratio (VSWR), is detected via a bi-directional coupler at the antenna input port and measures system forward and reflected power. If an excessive reflected power is detected an antenna VSWR fault is flagged and renders the radar inoperative. The BSU fault is detected via the electronics control card and fault-monitoring card in the BSU chassis. The BSU fault signal is indicated via

a red LED on the BSU front panel and indicates the status of the commanded vs. actuated relay positions. The LED and appropriate interface signals toggle to the fault position during switching time. This signal is normal and lasts less the 30 milliseconds (relay switching speed). It is an additional measure to the system signal processor/RF exciter LRU's and ensures no hot switching of the BSU relays. The fault-monitoring card identifies which relay if any have not actuated per the commanded signal and assists the EL TECH in identifying a relay coil failure. This signal latches at the BSU front panel but not to the system and can be reset via the reset button after the ELTECH replaces the failed switch. A BSU fault longer than 5 seconds render the system inoperative.

VSWR, forward and reverse power, and BSU faults are shown as status bits in the Portable Maintenance Terminal (PMT) *System Status Date Block* as shown in Figure 7-17. See the *PMT Operations Manual* for more Information about interpreting status bits.

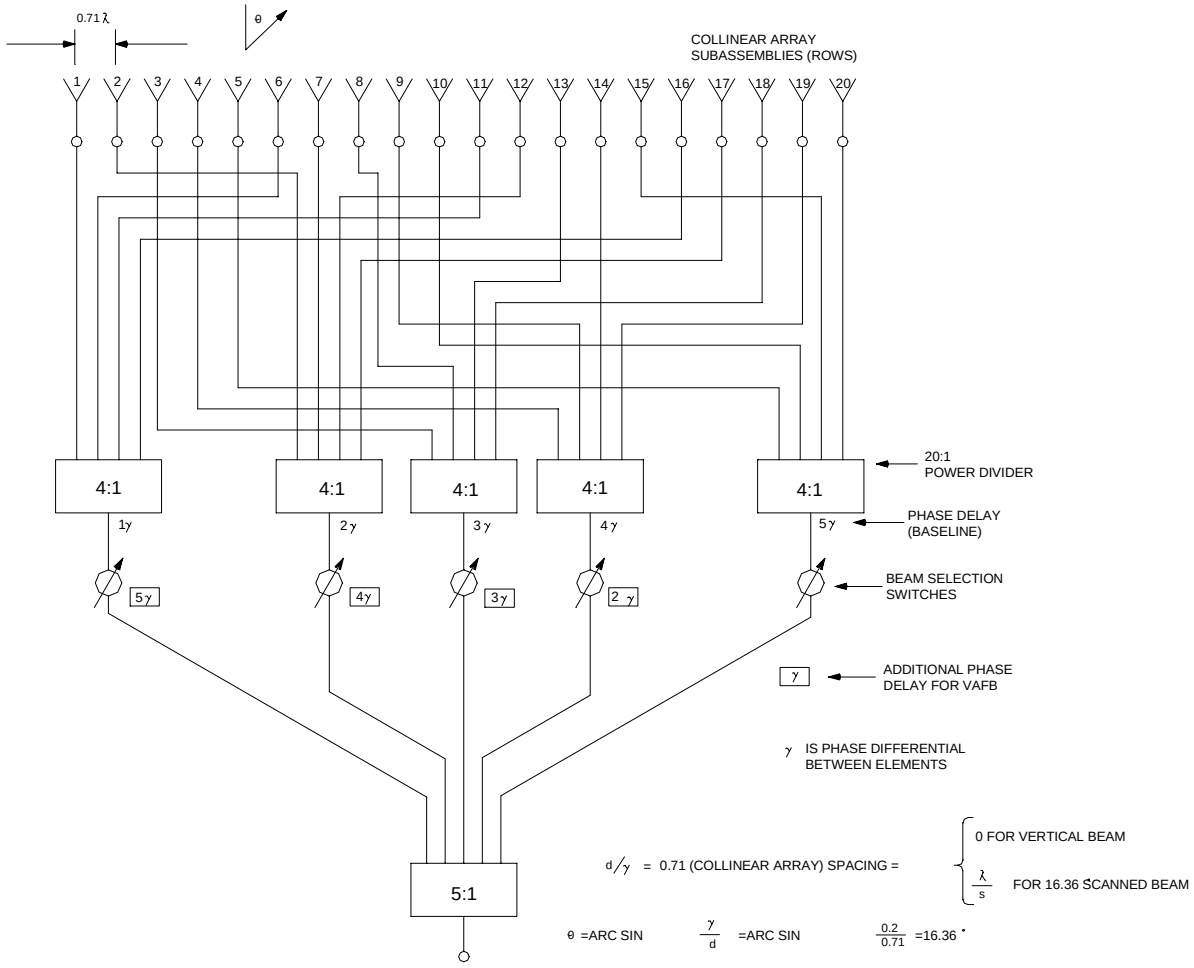

Figure 7-16 Phase Scan Technique

```
                                                                Operational


                              System Status Data Block

Mode:  03  Submode:  01  Length:  0035  Checksum:
PA Forward Power:  0.00  System Noise:  063
Miscellaneous Status:  00000000
LRU Byte 1:  00011111  Byte 2:  00000000  Byte 3:  00000000  Byte 4:  00000000
Failed PA mode: 16  Driver:1  Failed PS: 4  Failed Quad fans: 4  Driver fan:  Down
Transmitted Power,  dB: 38.5 AC Line Voltage - Low: 0  High: 0
Driver Output Power: 000  Current  AC Line Voltage: 0
Shelter Status Byte 1: 00000000  Byte 32: 01111000
Temperature (deg. C) - Inside: 20.83  Outside: 17.08
Status of - Exciter: 00000000  Power Supplies: 00000000  Antenna: 00000000
Antenna Power - Forward: 000  Reflected: 000  Antenna VSWR: 000
Online Test Status: 00000000
Goes Error Codes - Byte 1: 00000000  Byte 2: 00000000
Message Status - Good Msgs: 00
Messages with Comm Errors: 2-Aug-1999  14:45:35
Error Code: 44 Amplification Count: 06
52 54 53 52 41 50 00 00 00 00 00 00  Amplification Data: 18 36
```

Figure 7-17 PMT System Status Data Block Display

7.4 Antenna Performance Measurement Techniques

Antenna faults manifest themselves as a change in reflective power (usually as an increase). Normally these changes are gradual, and the system Status Monitor will shut down the radar and protect the equipment when excessive reflected power is detected. Sudden catastrophic antenna failures, however, may cause T/R Switch, Limiter, and receiver damage since just one high amplitude pulse could stress the Limiter and T/R switch beyond its rating. Simultaneous failures in multiple antenna feed cables constitute catastrophic antenna failure. This may take place during unprecedented storm conditions or vandalism. The usual failure mode, is that return loss of one (or more) antenna feed cables changes from the normal -11dB to -15dB range.

BSU malfunctions may also cause a high VSWR fault indication. If both BSU and VSWR faults occur, then the most probable source is the BSU. The system switches to *Inoperative Mode* if either a BSU or VSWR faults occur. Repair requires BSU replacement and VSWR verification measurement. Measurements at both the antenna feed cables and BSU input are necessary to ensure all malfunctions have been resolved. Refer to the following paragraphs for antenna measurement procedures and BSU check. A steady illumination of the red Fault led at the BSU front panel (>5 seconds) indicates that one or more of the coax relays has not switched to its commanded position. It may

also indicate a fault in the BSU monitoring circuits (relay contact or electronics). If a relay coil is at fault, its location is illuminated on the BSU front panel.

A fault signal from the BSU is sent to the Signal Processor and Status Monitor, which inhibits RF output from the RF Frequency Generator. Thus an exciter fault will be displayed in the PMT System Status display. However, this fault will clear when the BSU is repaired.

The tools and test equipment required to perform antenna measurements and repairs are outlined below in Table 7-4.

Table 7-4 Test Equipment and Tools (or equivalent)

Site Master S113	Anritsu Antenna Meter
HP-8900D	Peak Power Meter
HP-84811A	Peak Power Sensor
HP-8491A	10 dB Attenuator
HP-8753C	Network Analyzer
HP-85046A	S-Parameter Test Set
HP-85032B	50 Ohm Calibration Set
Fluke 8060A	True RMS Multimeter
TEK1502B	Time Domain Reflectometer (TDR)
RG-214	50 ft. cable Qty 1
RG-214	10 ft. cable Qty 2

Generic Phillips and Flat head screw driver
Generic 3/8" open end wrench
Generic 3/4" and 3/8” open end wrench
Generic 449 MHz low noise amplifier (35 dB Gain)
Various RF Connector Adapters, 50 Ohm Terminations
Generic Soft-Jaw Pliers

7.4.1 Antenna Feed Cable Return Loss Test

VSWR (Voltage Standing Wave Ratio) faults will cause the radar to shut down. VSWR faults can be caused by BSU switch failures (see Section 5 for BSU switch test procedures)., VSWR faults can also be caused by antenna failures. Antenna failures can be identified by using a meter to measure the return loss at each of the ten antenna feed cables. If a problem with one or more of the antenna feed cables is identified, the procedures defined in Section 7.4.2 can be used to test and isolate the problem at the component level. The following procedure uses an *Anritsu Site Master* meter to measure the return loss of antenna feed cables.

1. **Turn off the AC power for the Power Amplifier Cabinet** at the breaker panel (breaker #17/19).

2. Remove the side panel from the BSU cabinet.

3. Disconnect the ten extension cables (W111) from the output ports (*ARRAY 1* and *ARRAY 2*) from each of the BSU switch assemblies.

4. Turn on Anritsu Site Master. Attach "N" type cable with "barrel" adopter on back of unit. Insure top of display is set for "RETURN LOSS" and at bottom of display marker 1 (M1) displays 0.00 at 404.37 MHz as shown in Figure 7-18.

   If *Anritsu* display is not correct, press *RECALL SETUP*, press 1, then press *ENTER*. The display should return to the correct settings.

5. Connect the Anritsu cable to the end of first antenna feed cable, wait for the Anritsu display cursor to sweep and record cable ID and meter reading as shown in Figure 7-19. Repeat this procedure for each of the ten antenna feed cables.

6. Return Cabinet to original condition. Make sure all cables are re-connected to their proper locations and tightened sufficiently.

7. A Return loss reading for the antenna feed cables >12db (less negative. 9,10,11) indicates Antenna problems. Call PCC for advice as to whether to continue operating Radar site.

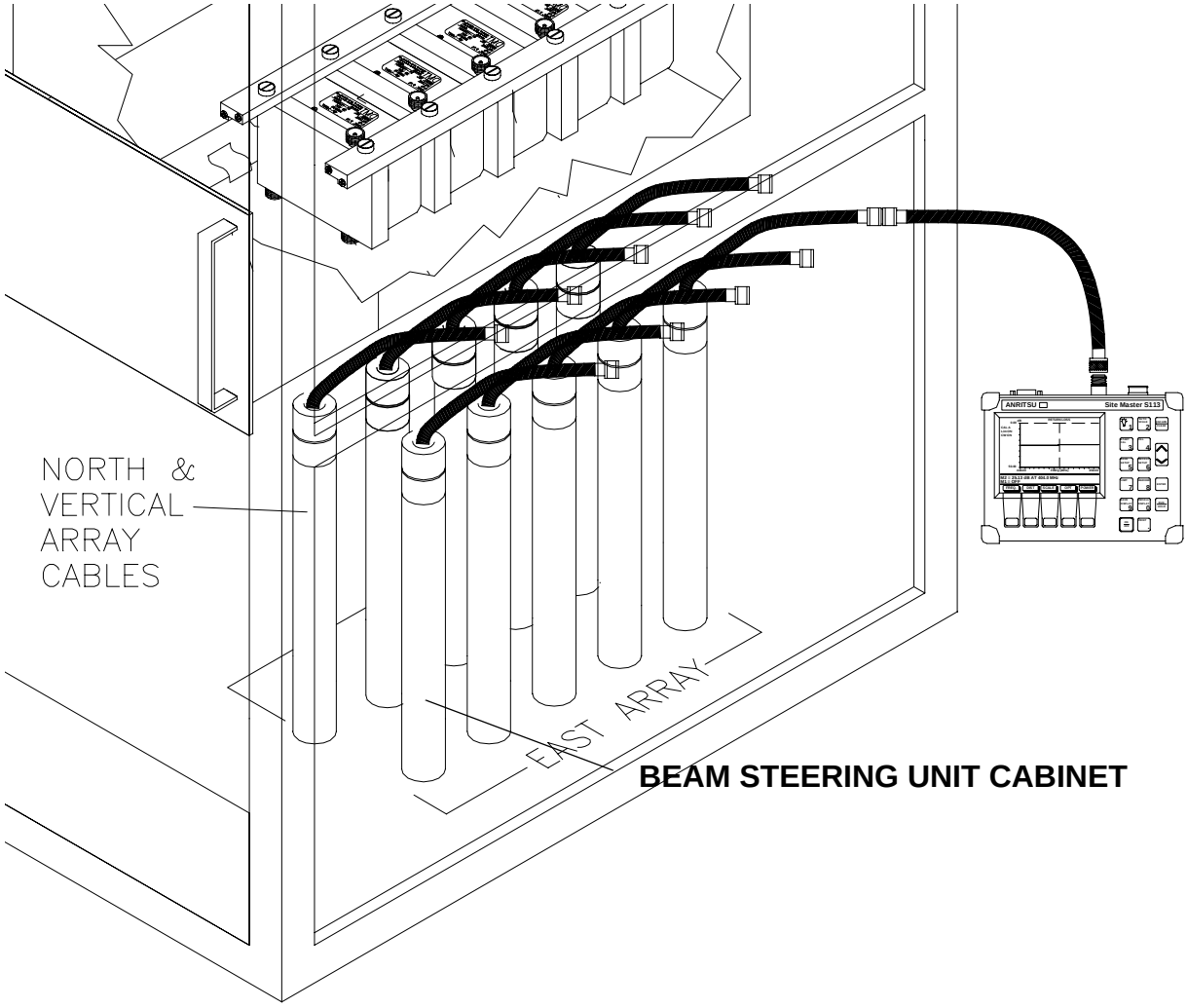

Figure 7-18 Antenna Feed Cable Return Loss Measurement

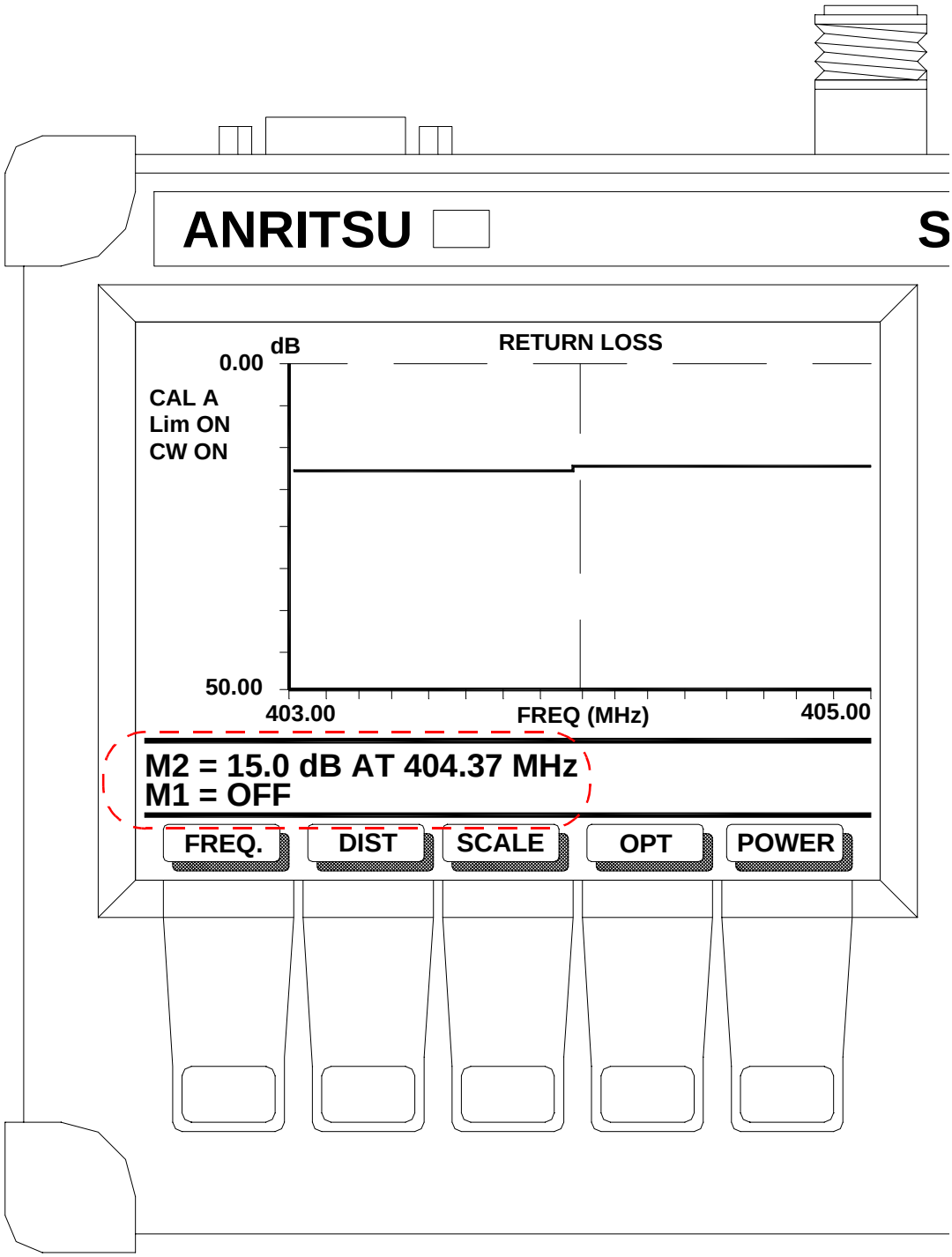

Figure 7-19 Anritsu Site Master Return Loss Display

7.4.2 Advanced Antenna Performance Measurements

7.4.2.1 Antenna VSWR Measurement

The Wind Profiler Radar system automatically monitors antenna VSWR by means of the bi-directional coupler, which measures Forward, and Reverse power at the antenna input port. From the forward and reflected values reported to the system and thus, the landline, antenna VSWR can be calculated.

For each beam (N, S, E, W, and V) the specified VSWR is <1.2:1 at center frequency of 449 MHz and <1.4:1 at edge frequencies of 448 and 450 MHz. Typically the scanned beams measure better VSWR than the Vertical beam. Any changes in detected FWD and REV power VSWR should then be investigated by an ELTECH or PCC RANGERS. Antenna VSWR can be measured using a peak power meter and calculating VSWR for each beam once forward and reverse power are measured (see WPS Operating and Maintenance Manual) or for more accrue readings a network analyzer may be used. To use a network analyzer to measure VSWR one must:

1. Ensure the WPS transmitter is turned off.

2. Set up and calibrate network analyzer to measure S11, VSWR at 449 MHz +/-1 MHz.

3. Remove bi-directional coupler and place 1 5/8" EIA adapter at 5:1 power divider input (or measure through circulator port 3).

4. Enter "Test" mode via PMT.

5. Command all beam positions in the "Doppler Test" menu and measure VSWR at antenna import on the network analyzer. Figure 7-20 depicts the S11 Antenna VSWR measurement.

7.4.2.2 Beam Steering Unit VSWR Measurement

If a high VSWR is detected in any particular beam as tested in Section, the problem must be isolated to either the BSU or antenna. The following describes a quick method to verify proper 5:1 BSU operation and path VSWR.

1. Ensure the WPS transmitter is turned off.

2. Set up and calibrate a network analyzer to measure S11 (VSWR) and S21 (A and 0).

3. Remove bi-directional coupler and place 1 5/8"EIA adapter at 5:1 power divider input.

4. Disconnect all 10 extension cables from the array feed cables and terminate all 10 extension cables which are now connected to the BSU only with a 50 Ohm loads.

5. Enter "Test" mode via the PMT.

6. Command all beam positions in the "Doppler Test" menu and measure S11 VSWR. A value of 1.2:1 or better should be measured for all beam positions. A value less than 1.2:1 for any beam position can be trouble shot by the following method.

   In each beam position, measure S21 (A and 0) at one BSU extension cable at a time while leaving the others terminated.

7. For East and West beams only B row extension cables are measured.

8. For North, South and Vertical beams only the A row extension cables are measured.

The above method measures amplitude and phase from the 5:1 power divider antenna input port through each BSU extension cable and losses. Phase angles are summarized below in Table 7-5

Table 7-5 BSU Insertion Loss

Beam Position	Switch Row Measured	Insertion Loss (Amplitude)	Phase Progression
East	B	< -8.5 dB	+72
West	B	< -8.5 dB	-72
North	A	< -8.5 dB	+72
South	A	< -8.5 dB	-72
Vertical	A	< -8.5 dB	0

Any values other than those measured above is indicative of a switch path failure and SW1 through SW5 (which is reading excessive loss) should be replaced.

Similarly the 5:1 power divider can be measured to ensure proper insertion loss and phase progression (see Table 7-6 for values.) Figure 7-21 depicts BSU VSWR measurement (S11).

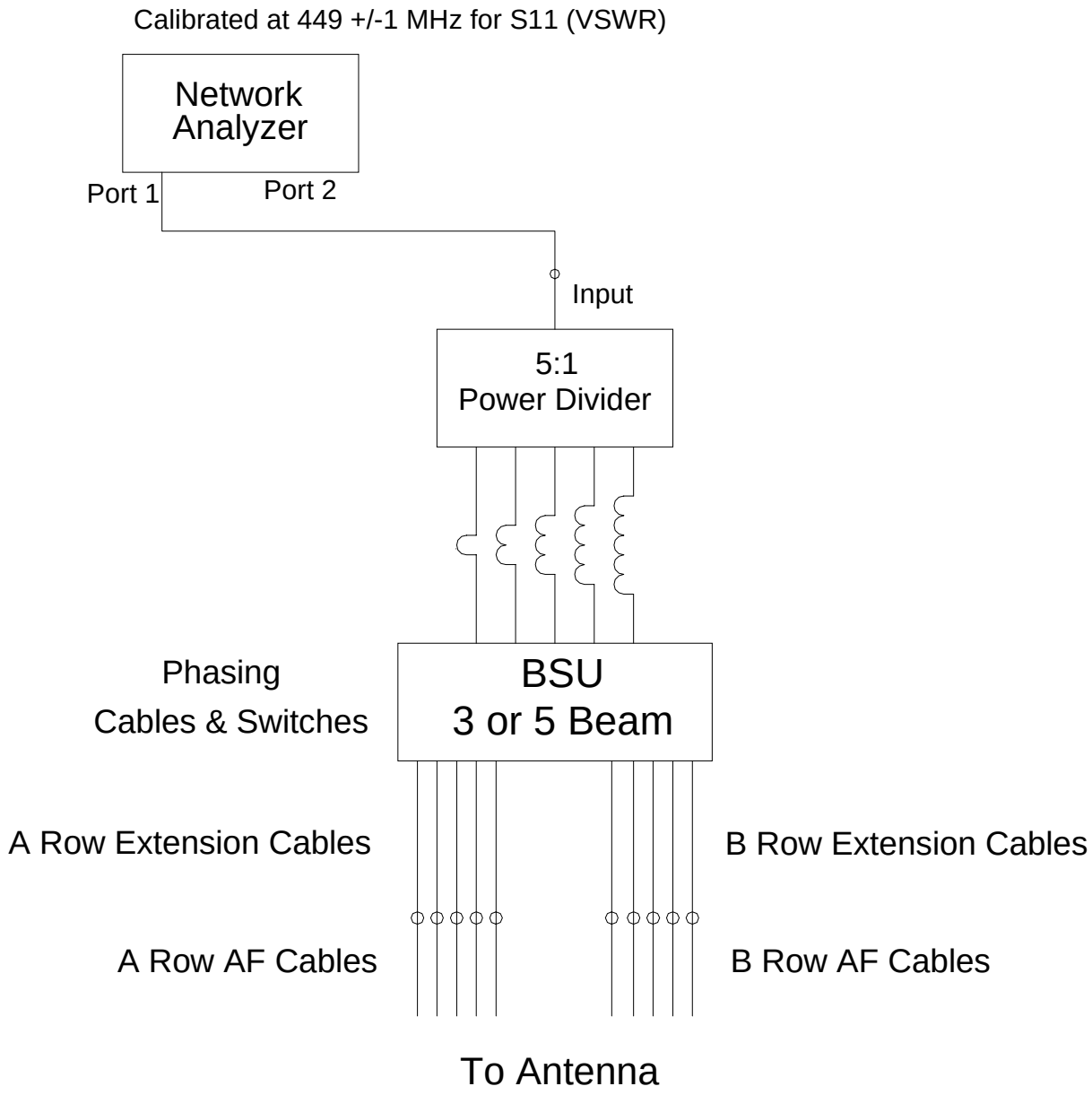

VSWR <1.2:1 all beam positions at 449 MHz

VSWR <1.4:1 all beam positions at 448 and 450 MHz

Figure 7-20 Antenna VSWR Measurement

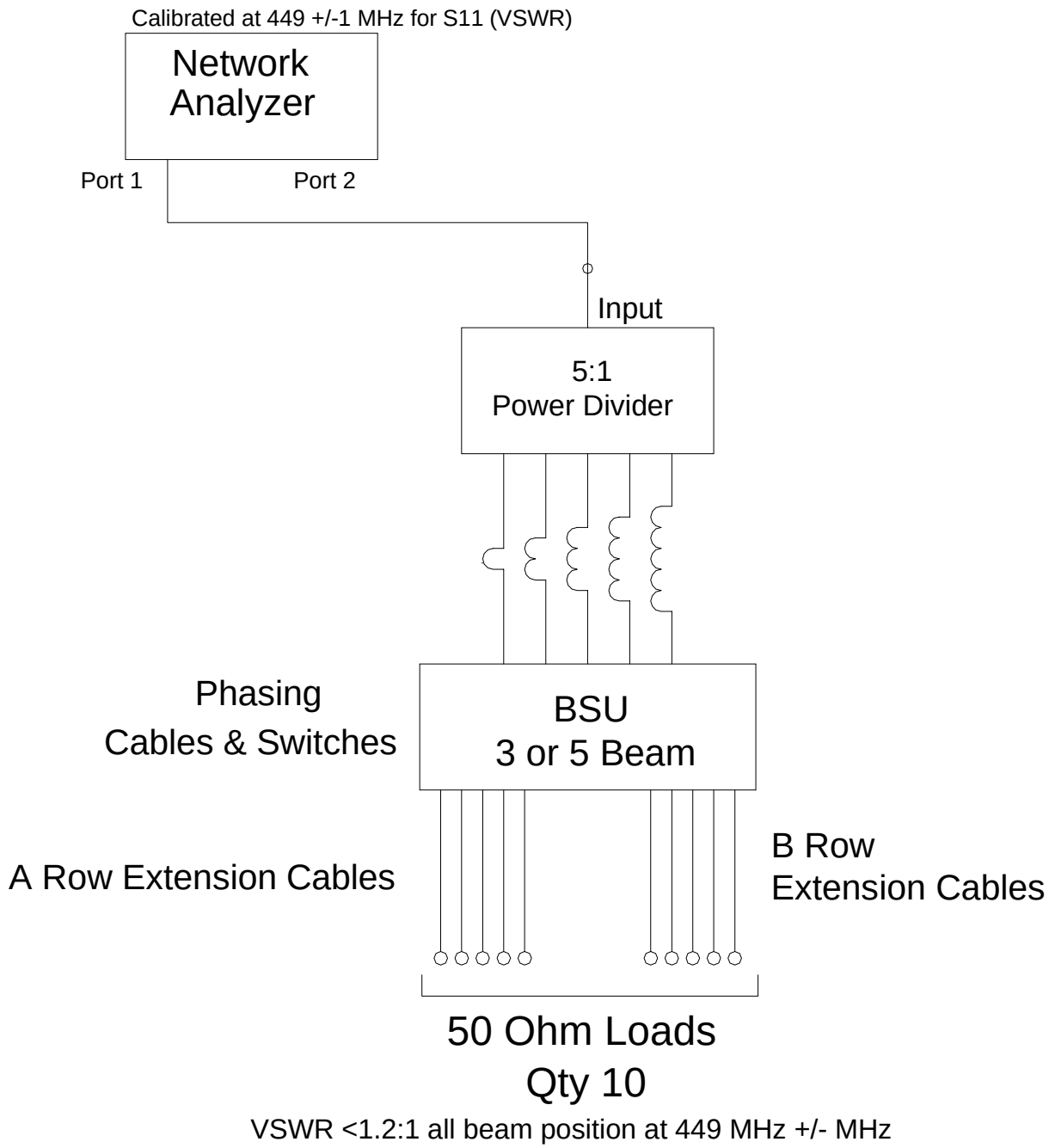

Figure 7-21 BSU VSWR Measurement

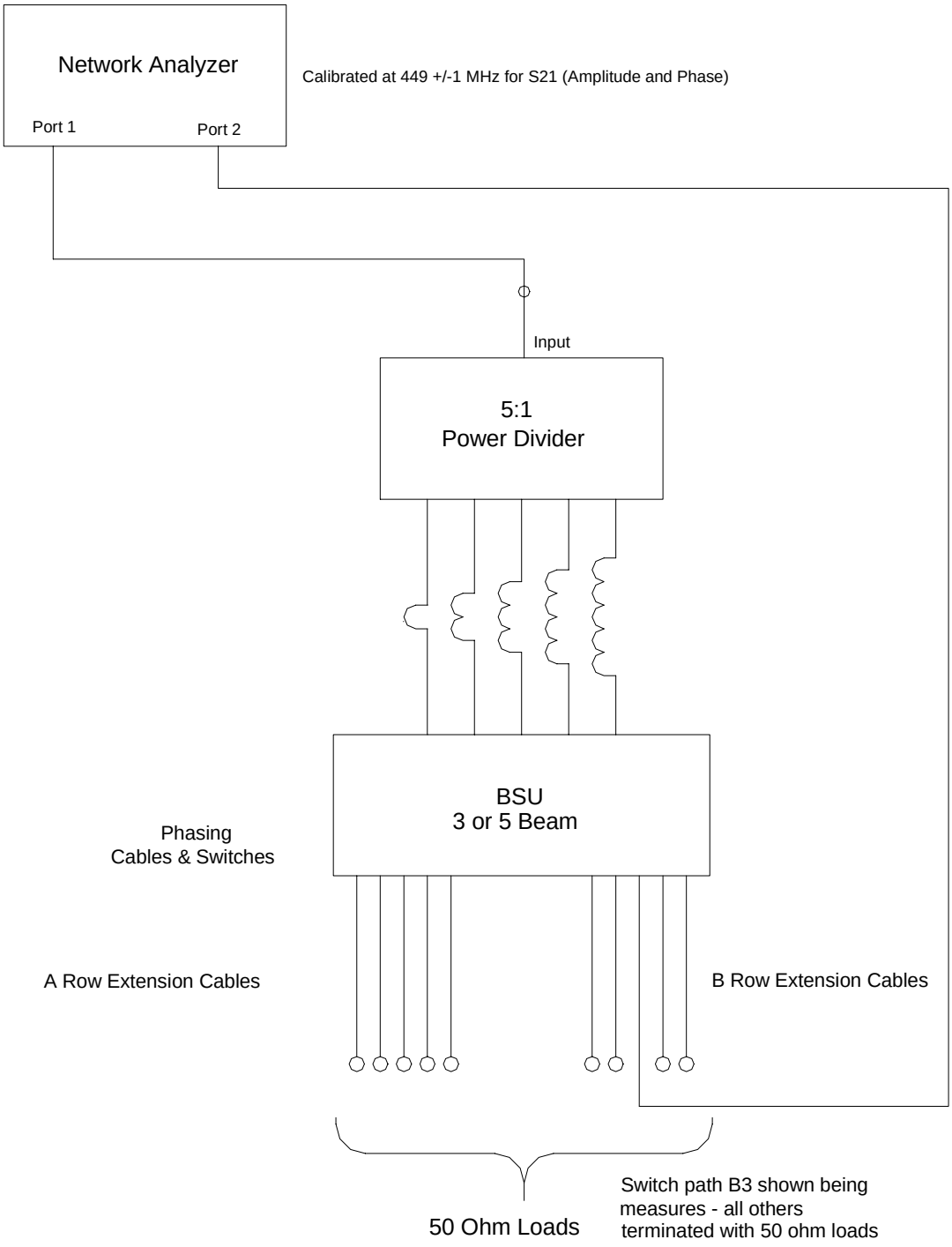

Insertion loss and phase per 5.2

Figure 7-22 BSU Insertion Loss and Phase Measurement

7.4.2.3 Array Feed Cable VSWR Measurement

If VSWR, Insertion Loss and Phase angle measures properly for the 5:1 power divider and BSU yet >1.2:1 VSWR is still detected for a particular beam position, the problem can be isolated to the specific Array Feed Cables (AF). "A" cables can be measured for beams N, S, and V and "B" cables can be measured for beams E and W. The procedure is described in the following steps and shown in Figure 7-23.

1. Ensure the WPS Transmitter is turned off.

2. Set up and calibrate a network analyzer to measure S11 (Return Loss).

3. Disconnect all 10 BSU extension cables (or the row for beam VSWR in question) and terminates the Array Feed cable with a 50 ohm load.

4. One at a time measures return loss (in dB) of each of the array feed cables. The values obtained should be between -11 dB and -15 dB. A reading which varies outside of this range requires further investigation to isolate the problem.

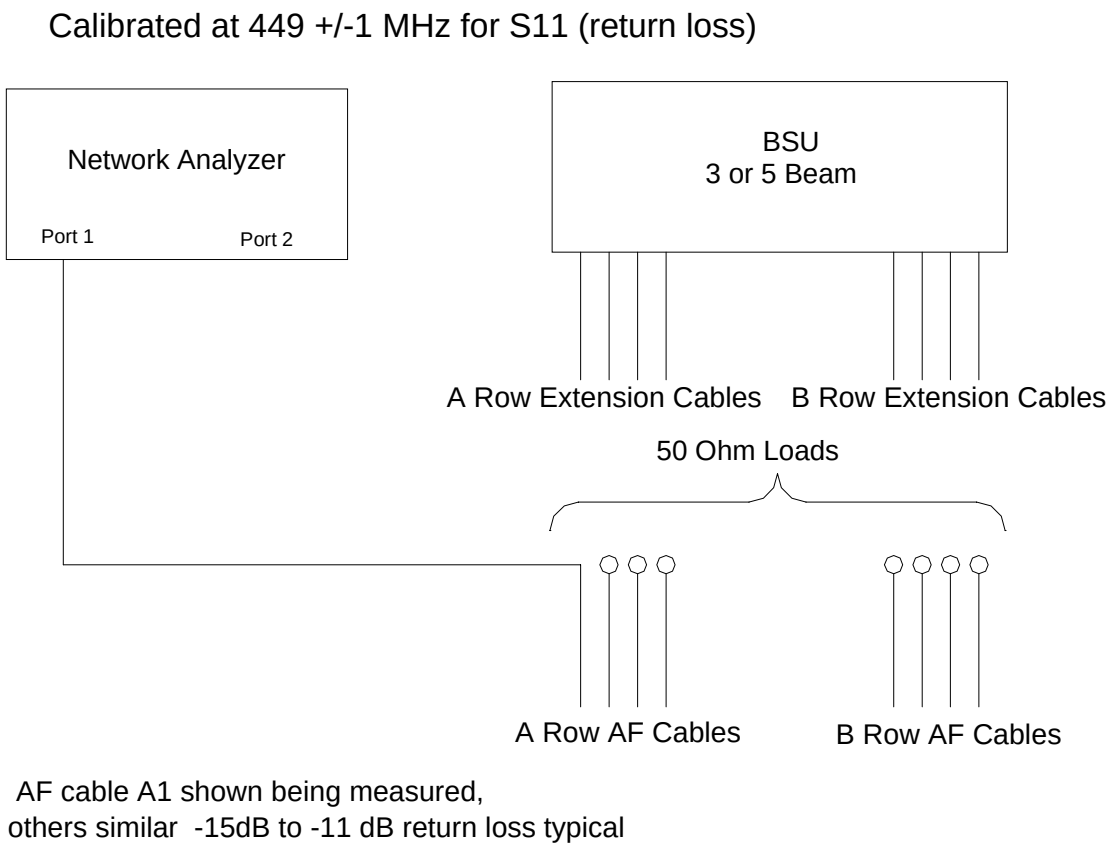

Figure 7-23 Antenna Insertion Loss and Phase Measurement

7.4.2.4 Power Divider Measurement

All system power dividers (5:1, 4:1, 3:1, and 2:1) can be verified for proper insertion loss and phasing using the test equipment setup show in Figure 7-24, using similar techniques as the ones described in Section 7.4.2.2. See Table 7-6 for typical power divider path values.

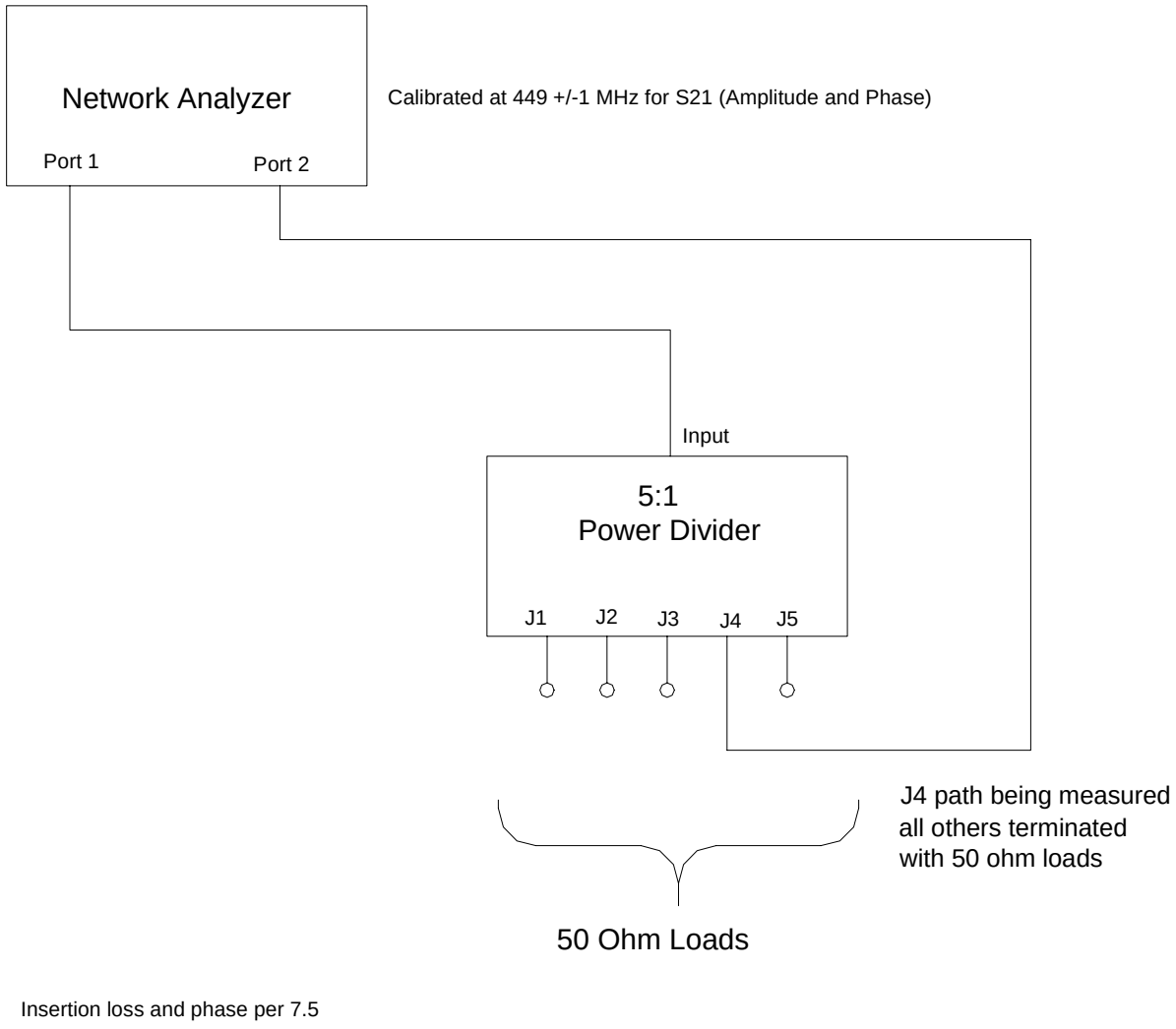

Figure 7-24 5:1 Power Divider Insertion Loss and Phase Measurement

Table 7-6 Typical 449 MHz Antenna System Power Divider Values

Type	Connector	Loss (dB)	Phase Angle (degrees)
2:1 Power Divider	J1 to J2	-3.0	+168
2:1 Power Divider	J1 to J3	-3.0	+168
3:1 Power Divider	J1 to J2	-6.0	+168
3:1 Power Divider	J1 to J4	-6.0	+168
3:1 Power Divider	J1 to J3	-3.0	+168
4:1 Power Divider (Style 1)	J1 to J2	-9.7	+173
4:1 Power Divider (Style 1)	J1 to J3	-6.0	+42
4:1 Power Divider (Style 1)	J1 to J4	-7.4	-42
4:1 Power Divider (Style 1)	J1 to J5	-3.5	-160
4:1 Power Divider (Style 2)	J1 to J2	-12.1	+173
4:1 Power Divider (Style 2)	J1 to J3	-4.5	+42
4:1 Power Divider (Style 2)	J1 to J4	-8.1	-42
4:1 Power Divider (Style 2)	J1 to J5	-3.6	-160
4:1 Power Divider (Style 3)	J1 to J2	-10.0	+173
4:1 Power Divider (Style 3)	J1 to J3	-4.0	+42
4:1 Power Divider (Style 3)	J1 to J4	-10.0	-42
4:1 Power Divider (Style 3)	J1 to J5	-4.0	-160
5:1 Power Divider	IN to J1	-7.0	+173
5:1 Power Divider	IN to J2	-7.0	+47
5:1 Power Divider	IN to J3	-7.0	-126
5:1 Power Divider	IN to J4	-7.0	-107
5:1 Power Divider	IN to J5	-7.0	-16

7.4.2.5 Distribution Feed Cable Measurement

All system cables including DF cables can be verified for proper insertion loss and phasing by following the procedure mentioned in Section 7.4.2.2 for the 5:1 power divider. However, No terminations are needed. See Table 7-7 for typical values. Cables can also be measured using a TDR and following procedure mentioned in the WPS O&M manual.

Table 7-7 Typical 449 MHz Antenna System Cable Values

Type	Loss (dB)	Phase Angle (degrees)
AF	-0.31	-90
DF4 (Type 4)	-0.15	-90
DF7 (Type 7)	-0.23	-90
DF10 (Type 10)	-0.19	0
DF11 (Type 11)	-0.28	0
DF8 (1232007)	0.10	173
DF9	0.11	123
DF10	0.12	69
DF11	0.13	-31
DF12	0.14	-84
DF12 (1232005)	0.10	+7
DF13	0.11	-112
DF14	0.12	+163
DF15	0.13	+30

7.4.2.6 Co-axial Co-linear Assembly (stick) Measurement

All system sticks can be verified for proper VSWR in the array environment. Follow the procedure mentioned in Section 7.4.2.2, except measure the stick value. Typical stick returns loss values range from -10 dB to -18 dB. See Figure 7-25.

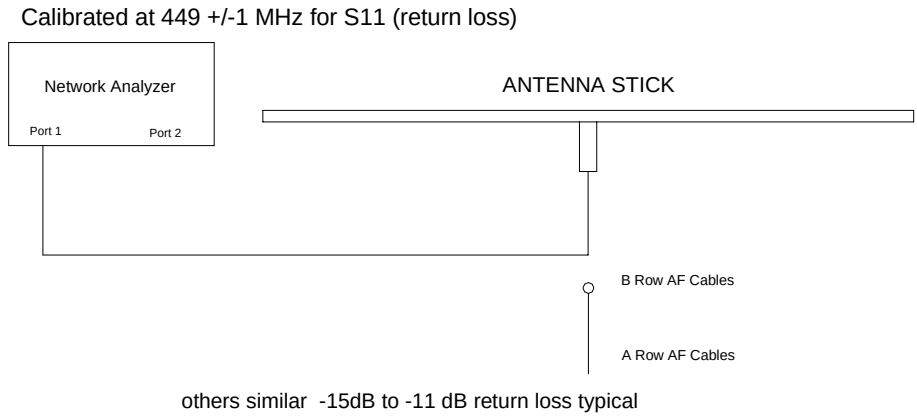

Figure 7-25 Antenna Element (Stick) Insertion Loss and Phase Measurement

7.5 Antenna LRU Replacement Procedures

Once a failed LRU has been identified the appropriate replacement must be obtained and installed. This section serves as an outline for replacement of major 449 MHz Co-axial C0-linear Antenna System LRU's.

7.5.1 Five-Way Power Divider Replacement

1. Turn off power to the WPS

2. Remove side panel from BSU Cabinet (See figure 25 for location)

3. Loosen and remove the four bolts on the EIA connection and all five PHD power feed cables.

4. Loosen and remove the screws on the mounting support of the 5:1 Power Divider and remove the 5:1 Power Divider.

5. Install the new 5:1 Power Divider by bolting to the Directional Coupler via EIA connector.

6. Install the screws that secure the mounting support of the 5:1 Power Divider. Adjust the position of the assembly to relieve any stress and tighten the screws securely.

7. Reconnect the five PHD power feed cables to the same ports they were removed from.

8. Replace the side panel.

9. Turn on the power to the WPS following the proper sequence.

7.5.2 Beam Steering Unit Replacement

1. Turn power off to the WPS.

2. Remove the side panel from the BSU cabinet. Remove the blank panels from above and below the BSU front panel.

3. Loosen the circular nut at J1, J2, and J3 on the back panel of the BSU and remove the three cables (only J1 and J2 on the 5-beam system).

4. Using soft jawed pliers, loosen and remove the connection between the 10 antenna array feed cables and the 10 BSU extension cables.

5. Using ¾" open end wrench, loosen the remove the connection between the five Beam selection switches and five PHD power feed cables. Note the location of each cable removed and make sure the cables are returned to the same ports they were from when the new unit is installed.

6. Remove the four mounting screws on the front panel of the BSU and carefully lift the unit out the front of the rack.

7. Remove the five phase delay cables from the BSU switches. Transfer the cables to the replacement unit in the same order they were on the original units. Exercise care not to bend or damage the switch contacts on the exterior of the switch when tightening connectors. Make sure connectors are tighten sufficiently using ¾" open end wrench to tighten fittings if accessible. Do not over tighten.

8. Remove the ten extension cables from the bottom of the BSU switches. Transfer these ten cables to the replacement unit in the same order and position they were on the original unit. Make sure connectors are tighten sufficiently using soft jawed pliers to tighten fittings accessible.

9. Install replacement unit in the rack and replace the four mounting screws on the front panel.

10. Connect the ten extension cables to the ten array feed cables. Start threading by hand to avoid cross threading. Finish tightening connectors with ¾" wrench. Do not over tighten.

11. Connect the five PHD phase cables to the BSU switches. Make sure the connections are tighten sufficiently.

12. Reconnect the three cables to J1, J2, and J3 on the rear panel of the BSU. Tighten circular nuts on connectors to hold in place (only J1 and J2 on the 5-beam system).

13. Replace the blank panel above and below the BSU front panels. Replace side panel on the BSU cabinet.

14. Turn on the power to the WPS following the proper sequence.

7.5.3 Beam Steering Unit Switches Replacement

Often it may be deemed more practical to replace the BSU switch as opposed to replacing the entire BSU unit. The following paragraph briefly outlines this procedure.

After identifying the failed switch by using the Anritsu Meter or Network Analyzer the following procedure can be used to replace the faulty switch assembly.

1. Turn the power off the WPS.

2. Remove PHD power feed cable and the extension cable from the appropriate switch.

3. Remove the power/control connector from the switch.

4. Remove the mounting screws on the switch that connects it to the BSU chassis.

5. Remove the phase delay cable from the switch and put it on the replacement switch.

6. Install the replacement switch by reversing the removal procedure.

7. Perform appropriate test to insure the BSU switch is working properly.

7.5.4 Antenna Cable Replacement

If a cable is deemed faulty the following should be reviewed prior to cable replacement.

1. Ensure the WPS and transmitter is turned off.

2. If necessary, use a razor knife to cut away the cold shrink or mastic tape seals on the cable connectors.

3. Cut cable ties holding cable in place as necessary.

4. Using a ¾" wrench remove the cable from the adjunct mating connector.

5. Install by reversing removal procedure and cold shrink or mastic tape, electrical tape and coat with electrical coating as necessary.

6. Cable-tie cable in place

7. Perform appropriate antenna test.

7.5.5 Power Dividers Replacement

The 4:1 and 2:1 power dividers are mounted to the antenna structure via hardware that requires 3/8" wrench to remove. The 3:1 power dividers are supported by the antenna Balun connection and the row distribution cables.

1. Cut away the mastic tape or cold shrink seal. Be careful not to cut the cable outer conductor installation.

2. Using a ¾" wrench remove all cables to the power divider.

3. Install replacement power divider and cold shrink, mastic tape, electrical tape and electrical coat connectors as necessary.

4. Perform appropriate antenna test.

7.5.6 Co-Axial Co-Linear Assemblies (sticks) Replacement

The antenna sticks are simply snap fitted to the antenna structure via stanchions or cross clips to replace.

1. Ensure power to the WPS and transmitter is turned off.

2. Cut away the cold shrink or mastic seal at the Balun connection.

3. Lift the stick from the antenna stanchion or cross clip.

4. Install replacement stick by reversing the removal procedure.

5. Apply cold shrink, or mastic seal as necessary.

6. Perform appropriate antenna test.

7.6 Cable and Wiring Lists

The following pages describe the cable listing and pinouts for the 3-beam and 5-beam antenna systems. 3-beam antenna cable listings are shown in Table 7-8 and 5-beam antenna cable listings are sown inTable 7-9. The 3-Beam schematic diagram references Figure 7-26, Figure 7-28, and Figure 7-29. The 5-Beam schematic diagram references Figure 7-27, Figure 7-28, and Figure 7-29

Table 7-8 3-Beam System Antenna Cable Run List

FROM	TO	CABLE
5:1 J1	SW5 IN (RF)	PHD12
5:1 J2	SW4 IN (RF)	PHD11
5:1 J3	SW3 IN (RF)	PHD10
5:1 J4	SW2 IN (RF)	PHD9
5:1 J5	SW1 IN (RF)	PHD8
SW1-Delay 1	SW1- Delay 2	PHD1
SW2-Delay 1	SW2- Delay 2	PHD2
SW3-Delay 1	SW3- Delay 2	PHD3
SW4-Delay 1	SW4- Delay 2	PHD4
SW5-Delay 1	SW5- Delay 2	PHD5
SW1-A Array 1 via Extension	4:1 A1-J1(PD1)	AFA1
SW2-A Array 1 via Extension	4:1 A2-J1(PD2)	AFA2
SW3-A Array 1 via Extension	4:1 A3-J1(PD3)	AFA3
SW4-A Array 1 via Extension	4:1 A4-J1(PD4)	AFA4
SW5-A Array 1 via Extension	4:1 A5-J1(PD5)	AFA5
SW1-B Array 2 via Extension	4:1 B1-J1(PD26)	AFB1
SW2-B Array 2 via Extension	4:1 B2-J1(PD27)	AFB2
SW3-B Array 2 via Extension	4:1 B3-J1(PD28)	AFB3
SW4-B Array 2 via Extension	4:1 B4-J1(PD29)	AFB4
SW5-B Array 2 via Extension	4:1 B5-J1(PD30)	AFB5
4:1 A1-J2 (PD1)	2:1 A1-J1 (PD6)	DF7 + DF15
4:1 A1-J3 (PD1)	3:1 A6-J1 (PD11)	DF4 + DF14
4:1 A1-J4 (PD1)	3:1 A16-J1 (PD21)	DF7 + DF13
4:1 A1-J5 (PD1)	3:1 A11-J1 (PD16)	DF4 + DF12
4:1 A2-J2 (PD2)	2:1 A2-J1 (PD7)	DF7 + DF15
4:1 A2-J3 (PD2)	3:1 A7-J1 (PD12)	DF4 + DF14
4:1 A2-J4 (PD2)	2:1 A17-J1 (PD22)	DF7 + DF13
4:1 A2-J5 (PD2)	3:1 A12-J1 (PD17)	DF4 + DF12
4:1 A3-J2 (PD3)	2:1 A3-J1 (PD8)	DF7 + DF15
4:1 A3-J3 (PD3)	3:1 A8-J1 (PD13)	DF4 + DF14

Table 7-8 3-Beam System Antenna Cable Run List

FROM	TO	CABLE
4:1 A3-J4 (PD3)	2:1 A18-J1 (PD23)	DF7 + DF13
4:1 A3-J5 (PD3)	3:1 A13-J1 (PD18)	DF4 + DF12
4:1 A4-J2 (PD4)	2:1 A19-J1 (PD24)	DF7 + DF15
4:1 A4-J3 (PD4)	3:1 A14-J1 (PD19)	DF4 + DF14
4:1 A4-J4 (PD4)	2:1 A4-J1 (PD9)	DF7 + DF13
4:1 A4-J5 (PD4)	3:1 A9-J1 (PD14)	DF4 + DF12
4:1 A5-J2 (PD5)	2:1 A20-J1 (PD25)	DF7 + DF15
4:1 A5-J3 (PD5)	3:1 A15-J1 (PD20)	DF4 + DF14
4:1 A5-J4 (PD5)	3:1 A5-J1 (PD10)	DF7 + DF13
4:1 A5-J5 (PD5)	3:1 A10-J1 (PD15)	DF4 + DF12
2:1 A1-J2(PD6)	STA1-W (ST13	DF10
2:1 A1-J3(PD6)	STA1-E (ST21)	DF10
2:1 A2-J2(PD7)	STA2-W (ST14)	DF10
2:1 A2-J3(PD7)	STA2-E (ST22)	DF10
2:1 A3-J2(PD8)	STA3-W (ST15)	DF10
2:1 A3-J3(PD8)	STA3-E (ST23)	DF10
2:1 A4-J2(PD9)	STA4-W (ST16)	DF10
2:1 A4-J3(PD9)	STA4-E (ST24)	DF10
3:1 A5-J2(PD10)	STA5-W (ST1)	DF11
3:1 A5-J3(PD10)	STA5-C (ST25)	Direct Connection
3:1 A5-J4(PD10)	STA5-E (ST41)	DF11
3:1 A6-J2(PD11)	STA6-W (ST2)	DF11
3:1 A6-J3(PD11)	STA6-C (ST26)	Direct Connection
3:1 A6-J4(PD11)	STA6-E (ST42)	DF11
3:1 A7-J2(PD12)	STA7-W (ST3)	DF11
3:1 A7-J3(PD12)	STA7-C (ST27)	Direct Connection
3:1 A7-J4(PD12)	STA7-E (ST43)	DF11
3:1 A8-J2(PD13)	STA8-W (ST4)	DF11
3:1 A8-J3(PD13)	STA8-C (ST28)	Direct Connection
3:1 A8-J4(PD13)	STA8-E (ST44)	DF11
3:1 A9-J2(PD14)	STA9-W (ST5)	DF11
3:1 A9-J3(PD14)	STA9-C (ST29)	Direct Connection

Table 7-8 3-Beam System Antenna Cable Run List

FROM	TO	CABLE
3:1 A9-J4(PD14)	STA9-E (ST45)	DF11
3:1 A10-J2(PD15)	STA10-W (ST6)	DF11
3:1 A10-J3(PD15)	STA10-C (ST30)	Direct Connection
3:1 A10-J4(PD15)	STA10-E (ST46)	DF11
3:1 A11-J2(PD16)	STA11-W (ST7)	DF11
3:1 A11-J3(PD16)	STA11-C (ST31)	Direct Connection
3:1 A11-J4(PD16)	STA11-E (ST47)	DF11
3:1 A12-J2(PD17)	STA12-W (ST8)	DF11
3:1 A12-J3(PD17)	STA12-C (ST32)	Direct Connection
3:1 A12-J4(PD17)	STA12-E (ST48)	DF11
3:1 A13-J2(PD18)	STA13-W (ST9)	DF11
3:1 A13-J3(PD18)	STA13-C (ST33)	Direct Connection
3:1 A13-J4(PD18)	STA13-E (ST49)	DF11
3:1 A14-J2(PD19)	STA14-W (ST10)	DF11
3:1 A14-J3(PD19)	STA14-C (ST34)	Direct Connection
3:1 A14-J4(PD19)	STA14-E (ST50)	DF11
3:1 A15-J2(PD20)	STA15-W (ST11)	DF11
3:1 A15-J3(PD20)	STA15-C (ST35)	Direct Connection
3:1 A15-J4(PD20)	STA15-E (ST51)	DF11
3:1 A16-J2(PD21)	STA16-W (ST12)	DF11
3:1 A16-J3(PD21)	STA16-C (ST36)	Direct Connection
3:1 A16-J4(PD21)	STA16-E (ST52)	DF11
2:1 A17-J2(PD22)	STA17-W (ST17)	DF10
2:1 A17-J3(PD22)	STA17-E (ST37)	DF10
2:1 A18-J2(PD23)	STA18-W (ST18)	DF10
2:1 A18-J3(PD23)	STA18-E (ST38)	DF10
2:1 A19-J2(PD24)	STA19-W (ST19)	DF10
2:1 A19-J3(PD24)	STA19-E (ST39)	DF10
2:1 A20-J2(PD25)	STA20-W (ST20)	DF10
2:1 A20-J3(PD25)	STA20-E (ST40)	DF10
4:1 B1-J2 (PD26)	2:1 B1-J1 (PD31)	DF7 + DF15
4:1 B1-J3 (PD26)	3:1 B6-J1 (PD36)	DF4 + DF14

Table 7-8 3-Beam System Antenna Cable Run List

FROM	TO	CABLE
4:1 B1-J4 (PD26)	3:1 B16-J1 (PD46)	DF7 + DF13
4:1 B1-J5 (PD26)	3:1 B11-J1 (PD41)	DF4 + DF12
4:1 B2-J2 (PD27)	2:1 B2-J1 (PD32)	DF7 + DF15
4:1 B2-J3 (PD27)	3:1 B7-J1 (PD37)	DF4 + DF14
4:1 B2-J4 (PD27)	2:1 B17-J1 (PD47)	DF7 + DF13
4:1 B2-J5 (PD27)	3:1 B12-J1 (PD42)	DF4 + DF12
4:1 B3-J2 (PD28)	2:1 B3-J1 (PD33)	DF7 + DF15
4:1 B3-J3 (PD28)	3:1 B8-J1 (PD38)	DF4 + DF14
4:1 B3-J4 (PD28)	2:1 B18-J1 (PD48)	DF7 + DF13
4:1 B3-J5 (PD28)	3:1 B13-J1 (PD43)	DF4 + DF12
4:1 B4-J2 (PD29)	2:1 B19-J1 (PD49)	DF7 + DF15
4:1 B4-J3 (PD29)	3:1 B14-J1 (PD44)	DF4 + DF14
4:1 B4-J4 (PD29)	2:1 B4-J1 (PD34)	DF7 + DF13
4:1 B4-J5 (PD29)	3:1 B9-J1 (PD39)	DF4 + DF12
4:1 B5-J2 (PD30)	2:1 B20-J1 (PD50)	DF7 + DF15
4:1 B5-J3 (PD30)	3:1 B15-J1 (PD45)	DF4 + DF14
4:1 B5-J4 (PD30)	3:1 B5-J1 (PD35)	DF7 + DF13
4:1 B5-J5 (PD30)	3:1 B10-J1 (PD40)	DF4 + DF12
2:1 B1-J2(PD31)	STB1-N (ST65)	DF10
2:1 B1-J3(PD31)	STB1-S (ST73)	DF10
2:1 B2-J2(PD32)	STB2-N (ST66)	DF10
2:1 B2-J3(PD32)	STB2-S (ST74)	DF10
2:1 B3-J2(PD33)	STB3-N (ST67)	DF10
2:1 B3-J3(PD33)	STB3-S (ST75)	DF10
2:1 B4-J2(PD34)	STB4-N (ST68)	DF10
2:1 B4-J3(PD34)	STB4-S (ST76)	DF10
3:1 B5-J2(PD35)	STB5-N (ST53)	DF11
3:1 B5-J3(PD35)	STB5-C (ST77)	Direct Connection
3:1 B5-J4(PD35)	STB5-S (ST93)	DF11
3:1 B6-J2(PD36)	STB6-N (ST54)	DF11
3:1 B6-J3(PD36)	STB6-C (ST78)	Direct Connection
3:1 B6-J4(PD36)	STB6-S (ST94)	DF11

Table 7-8 3-Beam System Antenna Cable Run List

FROM	TO	CABLE
3:1 B7-J2(PD37)	STB7-N (ST55)	DF11
3:1 B7-J3(PD37)	STB7-C (ST79)	Direct Connection
3:1 B7-J4(PD37)	STB7-S (ST95)	DF11
3:1 B8-J2(PD38)	STB8-N (ST56)	DF11
3:1 B8-J3(PD38)	STB8-C (ST80)	Direct Connection
3:1 B8-J4(PD38)	STB8-S (ST96)	DF11
3:1 B9-J2(PD39)	STB9-N (ST57)	DF11
3:1 B9-J3(PD39)	STB9-C (ST81)	Direct Connection
3:1 B9-J4(PD39)	STB9-S (ST97)	DF11
3:1 B10-J2(PD40)	STB10-N (ST58)	DF11
3:1 B10-J3(PD40)	STB10-C (ST82)	Direct Connection
3:1 B10-J4(PD40)	STB10-S (ST98)	DF11
3:1 B11-J2(PD41)	STB11-N (ST59)	DF11
3:1 B11-J3(PD41)	STB11-C (ST83)	Direct Connection
3:1 B11-J4(PD41)	STB11-S (ST99)	DF11
3:1 B12-J2(PD42)	STB12-N (ST60)	DF11
3:1 B12-J3(PD42)	STB12-C (ST84)	Direct Connection
3:1 B12-J4(PD42)	STB12-S (ST100)	DF11
3:1 B13-J2(PD43)	STB13-N (ST61)	DF11
3:1 B13-J3(PD43)	STB13-C (ST85)	Direct Connection
3:1 B13-J4(PD43)	STB13-S (ST101)	DF11
3:1 B14-J2(PD44)	STB14-N (ST62)	DF11
3:1 B14-J3(PD44)	STB14-C (ST86)	Direct Connection
3:1 B14-J4(PD44)	STB14-S (ST102)	DF11
3:1 B15-J2(PD45)	STB15-N (ST63)	DF11
3:1 B15-J3(PD45)	STB15-C (ST87)	Direct Connection
3:1 B15-J4(PD45)	STB15-S (ST103)	DF11
3:1 B16-J2(PD46)	STB16-N (ST64)	DF11
3:1 B16-J3(PD46)	STB16-C (ST88)	Direct Connection
3:1 B16-J4(PD46)	STB16-S (ST104)	DF11
2:1 B17-J2(PD47)	STB17-N (ST69)	DF10
2:1 B17-J3(PD47)	STB17-S (ST89)	DF10

Table 7-8 3-Beam System Antenna Cable Run List

FROM	TO	CABLE
2:1 B18-J2(PD48)	STB18-N (ST70)	DF10
2:1 B18-J3(PD48)	STB18-S (ST90)	DF10
2:1 B19-J2(PD49)	STB19-N (ST71)	DF10
2:1 B19-J3(PD49)	STB19-S (ST91)	DF10
2:1 B20-J2(PD50)	STB20-N (ST72)	DF10
2:1 B20-J3(PD50)	STB20-S (ST92)	DF10

Table 7-9 5-Beam System Antenna Cable Run List

FROM	TO	CABLE
5:1 J1	TSW5-J1 (RF)	PHD12
5:1 J2	TSW4-J1 (RF)	PHD11
5:1 J3	TSW3-J1 (RF)	PHD10
5:1 J4	TSW2-J1 (RF)	PHD9
5:1 J5	TSW1-J1 (RF)	PHD8
TSW1-J2	TSW1-J3	PHD1
TSW2-J2	TSW2-J3	PHD3
TSW3-J2	TSW3-J3	PHD5
TSW4-J2	TSW4-J3	PHD6
TSW5-J2	TSW5-J3	PHD7
TSW1-J4	SW1-IN (RF)	COAX
TSW2-J4	SW2-IN (RF)	COAX
TSW3-J4	SW3-IN (RF)	COAX
TSW4-J4	SW4-IN (RF)	COAX
TSW5-J4	SW5-IN (RF)	COAX
SW1-Delay 1	SW1- Delay 2	PHD1
SW2-Delay 1	SW2- Delay 2	PHD2
SW3-Delay 1	SW3- Delay 2	PHD3
SW4-Delay 1	SW4- Delay 2	PHD4
SW5-Delay 1	SW5- Delay 2	PHD5
SW1-A Array 1 via Extension	4:1 A1-J1(PD1)	AFA1
SW2-A Array 1 via Extension	4:1 A2-J1(PD2)	AFA2

Table 7-9 5-Beam System Antenna Cable Run List

FROM	TO	CABLE
SW3-A Array 1 via Extension	4:1 A3-J1(PD3)	AFA3
SW4-A Array 1 via Extension	4:1 A4-J1(PD4)	AFA4
SW5-A Array 1 via Extension	4:1 A5-J1(PD5)	AFA5
SW1-B Array 2 via Extension	4:1 B1-J1(PD26)	AFB1
SW2-B Array 2 via Extension	4:1 B2-J1(PD27)	AFB2
SW3-B Array 2 via Extension	4:1 B3-J1(PD28)	AFB3
SW4-B Array 2 via Extension	4:1 B4-J1(PD29)	AFB4
SW5-B Array 2 via Extension	4:1 B5-J1(PD30)	AFB5
4:1 A1-J2 (PD1)	2:1 A1-J1 (PD6)	DF7 + DF15
4:1 A1-J3 (PD1)	3:1 A6-J1 (PD11)	DF4 + DF14
4:1 A1-J4 (PD1)	3:1 A16-J1 (PD21)	DF7 + DF13
4:1 A1-J5 (PD1)	3:1 A11-J1 (PD16)	DF4 + DF12
4:1 A2-J2 (PD2)	2:1 A2-J1 (PD7)	DF7 + DF15
4:1 A2-J3 (PD2)	3:1 A7-J1 (PD12)	DF4 + DF14
4:1 A2-J4 (PD2)	2:1 A17-J1 (PD22)	DF7 + DF13
4:1 A2-J5 (PD2)	3:1 A12-J1 (PD17)	DF4 + DF12
4:1 A3-J2 (PD3)	2:1 A3-J1 (PD8)	DF7 + DF15
4:1 A3-J3 (PD3)	3:1 A8-J1 (PD13)	DF4 + DF14
4:1 A3-J4 (PD3)	2:1 A18-J1 (PD23)	DF7 + DF13
4:1 A3-J5 (PD3)	3:1 A13-J1 (PD18)	DF4 + DF12
4:1 A4-J2 (PD4)	2:1 A19-J1 (PD24)	DF7 + DF15
4:1 A4-J3 (PD4)	3:1 A14-J1 (PD19)	DF4 + DF14
4:1 A4-J4 (PD4)	2:1 A4-J1 (PD9)	DF7 + DF13
4:1 A4-J5 (PD4)	3:1 A9-J1 (PD14)	DF4 + DF12
4:1 A5-J2 (PD5)	2:1 A20-J1 (PD25)	DF7 + DF15
4:1 A5-J3 (PD5)	3:1 A15-J1 (PD20)	DF4 + DF14
4:1 A5-J4 (PD5)	3:1 A5-J1 (PD10)	DF7 + DF13
4:1 A5-J5 (PD5)	3:1 A10-J1 (PD15)	DF4 + DF12
2:1 A1-J2(PD6)	STA1-W (ST13	DF10
2:1 A1-J3(PD6)	STA1-E (ST21)	DF10
2:1 A2-J2(PD7)	STA2-W (ST14)	DF10
2:1 A2-J3(PD7)	STA2-E (ST22)	DF10

Table 7-9 5-Beam System Antenna Cable Run List

FROM	TO	CABLE
2:1 A3-J2(PD8)	STA3-W (ST15)	DF10
2:1 A3-J3(PD8)	STA3-E (ST23)	DF10
2:1 A4-J2(PD9)	STA4-W (ST16)	DF10
2:1 A4-J3(PD9)	STA4-E (ST24)	DF10
3:1 A5-J2(PD10)	STA5-W (ST1)	DF11
3:1 A5-J3(PD10)	STA5-C (ST25)	Direct Connection
3:1 A5-J4(PD10)	STA5-E (ST41)	DF11
3:1 A6-J2(PD11)	STA6-W (ST2)	DF11
3:1 A6-J3(PD11)	STA6-C (ST26)	Direct Connection
3:1 A6-J4(PD11)	STA6-E (ST42)	DF11
3:1 A7-J2(PD12)	STA7-W (ST3)	DF11
3:1 A7-J3(PD12)	STA7-C (ST27)	Direct Connection
3:1 A7-J4(PD12)	STA7-E (ST43)	DF11
3:1 A8-J2(PD13)	STA8-W (ST4)	DF11
3:1 A8-J3(PD13)	STA8-C (ST28)	Direct Connection
3:1 A8-J4(PD13)	STA8-E (ST44)	DF11
3:1 A9-J2(PD14)	STA9-W (ST5)	DF11
3:1 A9-J3(PD14)	STA9-C (ST29)	Direct Connection
3:1 A9-J4(PD14)	STA9-E (ST45)	DF11
3:1 A10-J2(PD15)	STA10-W (ST6)	DF11
3:1 A10-J3(PD15)	STA10-C (ST30)	Direct Connection
3:1 A10-J4(PD15)	STA10-E (ST46)	DF11
3:1 A11-J2(PD16)	STA11-W (ST7)	DF11
3:1 A11-J3(PD16)	STA11-C (ST31)	Direct Connection
3:1 A11-J4(PD16)	STA11-E (ST47)	DF11
3:1 A12-J2(PD17)	STA12-W (ST8)	DF11
3:1 A12-J3(PD17)	STA12-C (ST32)	Direct Connection
3:1 A12-J4(PD17)	STA12-E (ST48)	DF11
3:1 A13-J2(PD18)	STA13-W (ST9)	DF11
3:1 A13-J3(PD18)	STA13-C (ST33)	Direct Connection
3:1 A13-J4(PD18)	STA13-E (ST49)	DF11
3:1 A14-J2(PD19)	STA14-W (ST10)	DF11

Table 7-9 5-Beam System Antenna Cable Run List

FROM	TO	CABLE
3:1 A14-J3(PD19)	STA14-C (ST34)	Direct Connection
3:1 A14-J4(PD19)	STA14-E (ST50)	DF11
3:1 A15-J2(PD20)	STA15-W (ST11)	DF11
3:1 A15-J3(PD20)	STA15-C (ST35)	Direct Connection
3:1 A15-J4(PD20)	STA15-E (ST51)	DF11
3:1 A16-J2(PD21)	STA16-W (ST12)	DF11
3:1 A16-J3(PD21)	STA16-C (ST36)	Direct Connection
3:1 A16-J4(PD21)	STA16-E (ST52)	DF11
2:1 A17-J2(PD22)	STA17-W (ST17)	DF10
2:1 A17-J3(PD22)	STA17-E (ST37)	DF10
2:1 A18-J2(PD23)	STA18-W (ST18)	DF10
2:1 A18-J3(PD23)	STA18-E (ST38)	DF10
2:1 A19-J2(PD24)	STA19-W (ST19)	DF10
2:1 A19-J3(PD24)	STA19-E (ST39)	DF10
2:1 A20-J2(PD25)	STA20-W (ST20)	DF10
2:1 A20-J3(PD25)	STA20-E (ST40)	DF10
4:1 B1-J2 (PD26)	2:1 B1-J1 (PD31)	DF7 + DF15
4:1 B1-J3 (PD26)	3:1 B6-J1 (PD36)	DF4 + DF14
4:1 B1-J4 (PD26)	3:1 B16-J1 (PD46)	DF7 + DF13
4:1 B1-J5 (PD26)	3:1 B11-J1 (PD41)	DF4 + DF12
4:1 B2-J2 (PD27)	2:1 B2-J1 (PD32)	DF7 + DF15
4:1 B2-J3 (PD27)	3:1 B7-J1 (PD37)	DF4 + DF14
4:1 B2-J4 (PD27)	2:1 B17-J1 (PD47)	DF7 + DF13
4:1 B2-J5 (PD27)	3:1 B12-J1 (PD42)	DF4 + DF12
4:1 B3-J2 (PD28)	2:1 B3-J1 (PD33)	DF7 + DF15
4:1 B3-J3 (PD28)	3:1 B8-J1 (PD38)	DF4 + DF14
4:1 B3-J4 (PD28)	2:1 B18-J1 (PD48)	DF7 + DF13
4:1 B3-J5 (PD28)	3:1 B13-J1 (PD43)	DF4 + DF12
4:1 B4-J2 (PD29)	2:1 B19-J1 (PD49)	DF7 + DF15
4:1 B4-J3 (PD29)	3:1 B14-J1 (PD44)	DF4 + DF14
4:1 B4-J4 (PD29)	2:1 B4-J1 (PD34)	DF7 + DF13
4:1 B4-J5 (PD29)	3:1 B9-J1 (PD39)	DF4 + DF12

Table 7-9 5-Beam System Antenna Cable Run List

FROM	TO	CABLE
4:1 B5-J2 (PD30)	2:1 B20-J1 (PD50)	DF7 + DF15
4:1 B5-J3 (PD30)	3:1 B15-J1 (PD45)	DF4 + DF14
4:1 B5-J4 (PD30)	3:1 B5-J1 (PD35)	DF7 + DF13
4:1 B5-J5 (PD30)	3:1 B10-J1 (PD40)	DF4 + DF12
2:1 B1-J2(PD31)	STB1-N (ST65)	DF10
2:1 B1-J3(PD31)	STB1-S (ST73)	DF10
2:1 B2-J2(PD32)	STB2-N (ST66)	DF10
2:1 B2-J3(PD32)	STB2-S (ST74)	DF10
2:1 B3-J2(PD33)	STB3-N (ST67)	DF10
2:1 B3-J3(PD33)	STB3-S (ST75)	DF10
2:1 B4-J2(PD34)	STB4-N (ST68)	DF10
2:1 B4-J3(PD34)	STB4-S (ST76)	DF10
3:1 B5-J2(PD35)	STB5-N (ST53)	DF11
3:1 B5-J3(PD35)	STB5-C (ST77)	Direct Connection
3:1 B5-J4(PD35)	STB5-S (ST93)	DF11
3:1 B6-J2(PD36)	STB6-N (ST54)	DF11
3:1 B6-J3(PD36)	STB6-C (ST78)	Direct Connection
3:1 B6-J4(PD36)	STB6-S (ST94)	DF11
3:1 B7-J2(PD37)	STB7-N (ST55)	DF11
3:1 B7-J3(PD37)	STB7-C (ST79)	Direct Connection
3:1 B7-J4(PD37)	STB7-S (ST95)	DF11
3:1 B8-J2(PD38)	STB8-N (ST56)	DF11
3:1 B8-J3(PD38)	STB8-C (ST80)	Direct Connection
3:1 B8-J4(PD38)	STB8-S (ST96)	DF11
3:1 B9-J2(PD39)	STB9-N (ST57)	DF11
3:1 B9-J3(PD39)	STB9-C (ST81)	Direct Connection
3:1 B9-J4(PD39)	STB9-S (ST97)	DF11
3:1 B10-J2(PD40)	STB10-N (ST58)	DF11
3:1 B10-J3(PD40)	STB10-C (ST82)	Direct Connection
3:1 B10-J4(PD40)	STB10-S (ST98)	DF11
3:1 B11-J2(PD41)	STB11-N (ST59)	DF11
3:1 B11-J3(PD41)	STB11-C (ST83)	Direct Connection

Table 7-9 5-Beam System Antenna Cable Run List

FROM	TO	CABLE
3:1 B11-J4(PD41)	STB11-S (ST99)	DF11
3:1 B12-J2(PD42)	STB12-N (ST60)	DF11
3:1 B12-J3(PD42)	STB12-C (ST84)	Direct Connection
3:1 B12-J4(PD42)	STB12-S (ST100)	DF11
3:1 B13-J2(PD43)	STB13-N (ST61)	DF11
3:1 B13-J3(PD43)	STB13-C (ST85)	Direct Connection
3:1 B13-J4(PD43)	STB13-S (ST101)	DF11
3:1 B14-J2(PD44)	STB14-N (ST62)	DF11
3:1 B14-J3(PD44)	STB14-C (ST86)	Direct Connection
3:1 B14-J4(PD44)	STB14-S (ST102)	DF11
3:1 B15-J2(PD45)	STB15-N (ST63)	DF11
3:1 B15-J3(PD45)	STB15-C (ST87)	Direct Connection
3:1 B15-J4(PD45)	STB15-S (ST103)	DF11
3:1 B16-J2(PD46)	STB16-N (ST64)	DF11
3:1 B16-J3(PD46)	STB16-C (ST88)	Direct Connection
3:1 B16-J4(PD46)	STB16-S (ST104)	DF11
2:1 B17-J2(PD47)	STB17-N (ST69)	DF10
2:1 B17-J3(PD47)	STB17-S (ST89)	DF10
2:1 B18-J2(PD48)	STB18-N (ST70)	DF10
2:1 B18-J3(PD48)	STB18-S (ST90)	DF10
2:1 B19-J2(PD49)	STB19-N (ST71)	DF10
2:1 B19-J3(PD49)	STB19-S (ST91)	DF10
2:1 B20-J2(PD50)	STB20-N (ST72)	DF10
2:1 B20-J3(PD50)	STB20-S (ST92)	DF10

Table 7-10 Beam Steering Unit (3-beam) Pin-Out Listing

Connector	Pin	Signal
J1	1	+5 Vdc

Table 7-10 Beam Steering Unit (3-beam) Pin-Out Listing

Connector	Pin	Signal
J1	2	no signal
J1	3	no signal
J1	4	no signal
J1	5	-5Vdc (to J3-2)
J1	6	no signal
J1	7	+5 Vdc-RTN
J1	8	-5 Vdc-RTN (to J3-5)
J1	9	+60 Vdc (to J3-3)
J1	10	+5 Vdc
J1	11	+28 Vdc
J1	12	+60 Vdc-RTN (to J3-6)
J1	13	+28 Vdc
J1	14	+28 Vdc-RTN
J1	15	+5 Vdc-RTN
J1	16	+28 Vdc-RTN
J2	1	T/R-T (to J3-7)
J2	2	T/R-C (toJ3-8)
J2	3	BMPOS-1T
J2	4	BMPOS-1C
J2	5	BMPOS-0T
J2	6	BMPOS-0C
J2	7	no signal
J2	8	no signal
J2	9	no signal
J2	10	no signal
J2	11	S.P.-BSU-FLT-T
J2	12	S.P.-BSU-FLT-C
J2	13	S.M.-BSU-FLT-T
J2	14	S.M.-BSU-FLT-C
J2	15	no signal
J2	16	no signal
J3	1	+5 Vdc (from Electronics Card)

Table 7-10 Beam Steering Unit (3-beam) Pin-Out Listing

Connector	Pin	Signal
J3	2	-5 Vdc (from J1-5)
J3	3	+60 Vdc (from J1-9)
J3	4	+5 Vdc-RTN (from Electronic Card)
J3	5	-5 Vdc-RTN (from J1-8)
J3	6	+60 Vdc-RTN (from J1-12)
J3	7	T/R-T (from J2-1)
J3	8	T/R-C (from J2-2)
J3	9	no signal

Table 7-11 Beam Steering Unit (5-beam) Pin-Out Listing

Connector	Pin	Signal
J1	H	AC-Line
J1	N	AC-Neutral
J1	G	AC-Ground
J2	1	no signal
J2	2	no signal
J2	3	BMPOS-1T
J2	4	BMPOS-1C
J2	5	BMPOS-0T
J2	6	BMPOS-0C
J2	7	BMPOS-2T
J2	8	BMPOS-2C
J2	9	no signal
J2	10	no signal
J2	11	S.P.-BSU-FLT-T
J2	12	S.P.-BSU-FLT-C
J2	13	S.M.-BSU-FLT-T
J2	14	S.M.-BSU-FLT-C
J2	15	no signal
J2	16	no signal

Table 7-12 449 MHz Antenna Array power Distribution (Relative to 1)

Row		Aperture		Excitation	
1		0.23215		0.23215	
2		0.13184		0.13184	
3		0.22120		0.22120	
4		0.33465		0.33465	
5	0.20313		0.40626		0.20313
8	0.27854		0.55169		0.27854
9	0.38327		0.76654		0.38327
6	0.43638		0.87276		0.43638
7	0.47854		0.95707		0.47854
10	0.50000		1.00000		0.50000
11	0.50000		1.00000		0.50000
12	0.47854		0.95707		0.47854
13	0.43638		0.87276		0.43638
14	0.38327		0.76654		0.38327
15	0.27854		0.55169		0.27854
16	0.20313		0.40626		0.20313
17		0.33465		0.33645	
18		0.22120		0.22120	
19		0.13184		0.13184	
20		0.23215		0.23215	

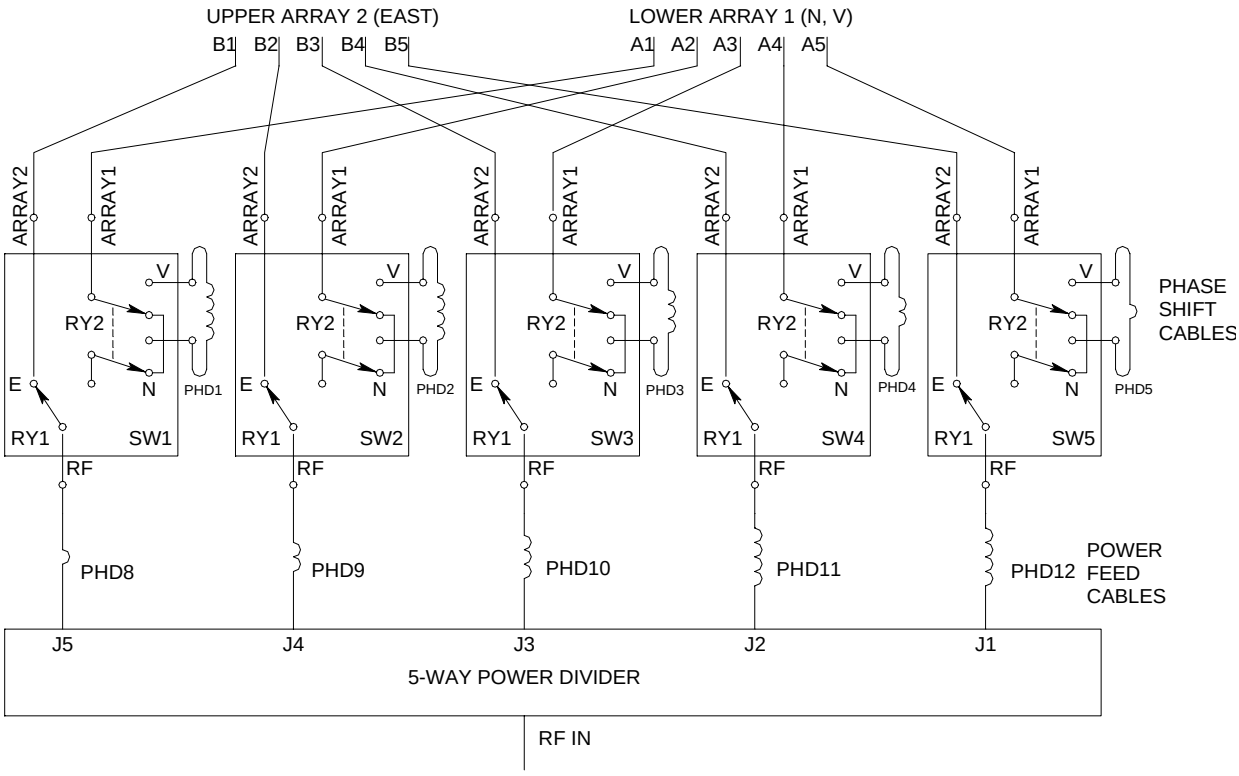

Figure 7-26 Beam Steering Network (3-Beam Systems)

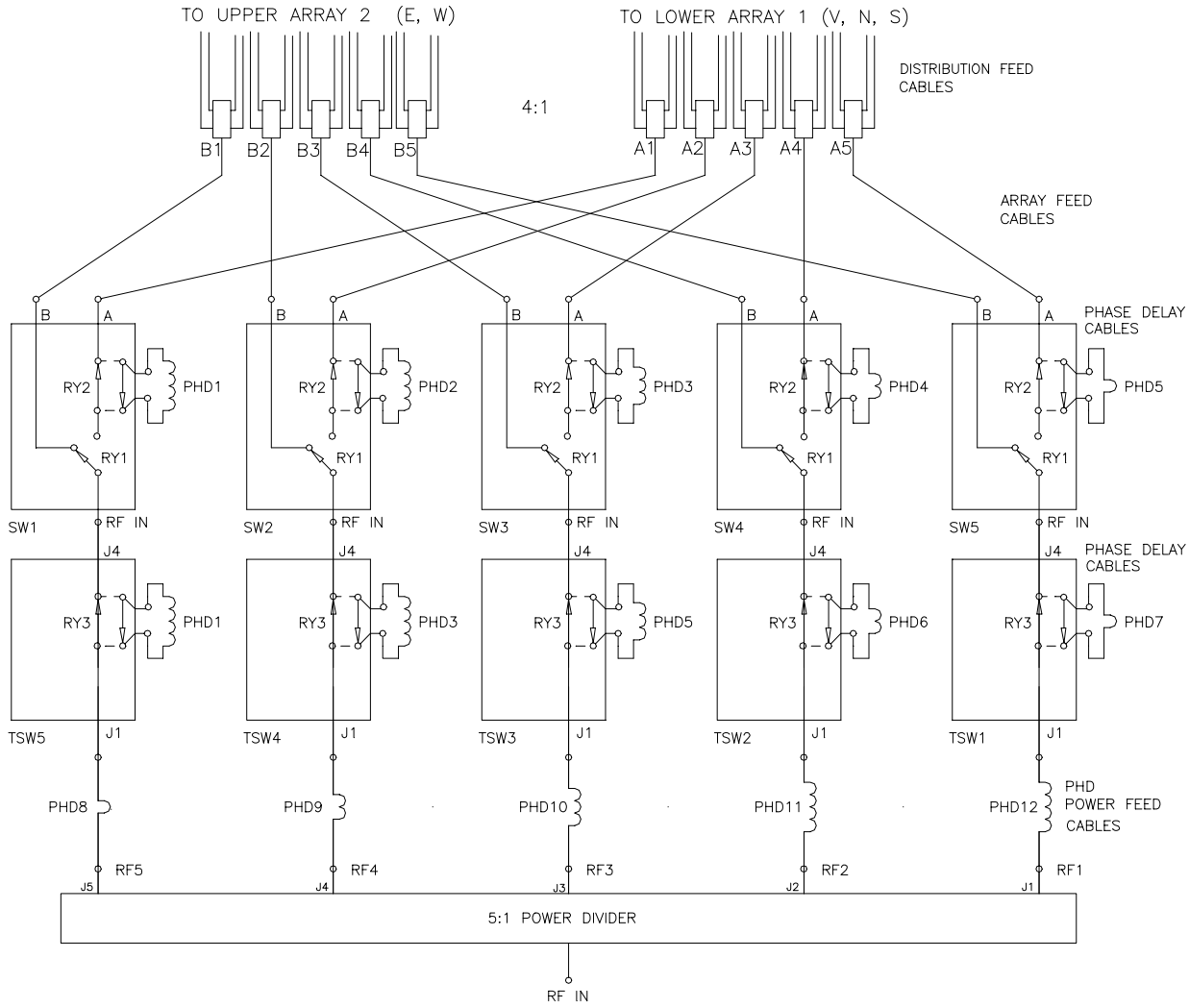

Figure 7-27 Beam Steering Network (5-Beam Systems)

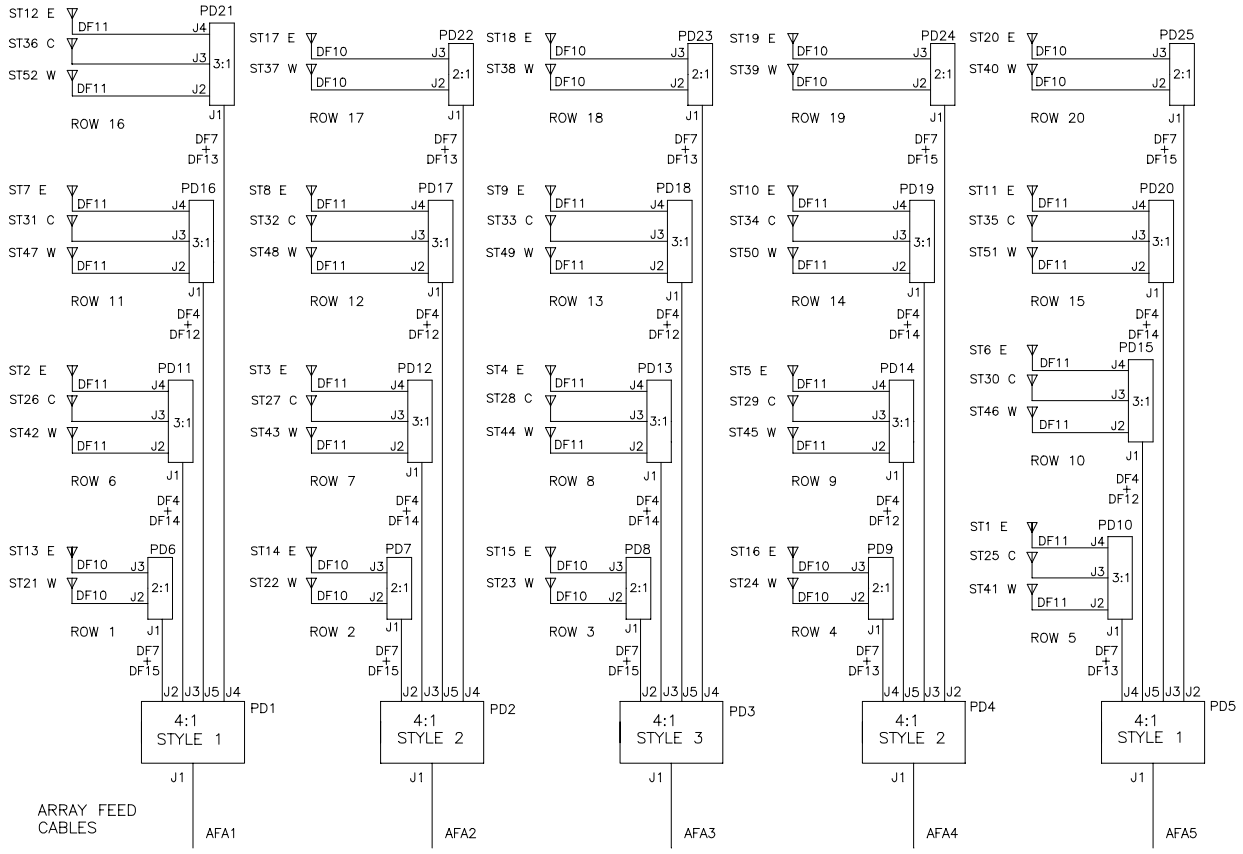

Figure 7-28 Lower Array 1 (N, S, V) Antenna Cabling Diagram

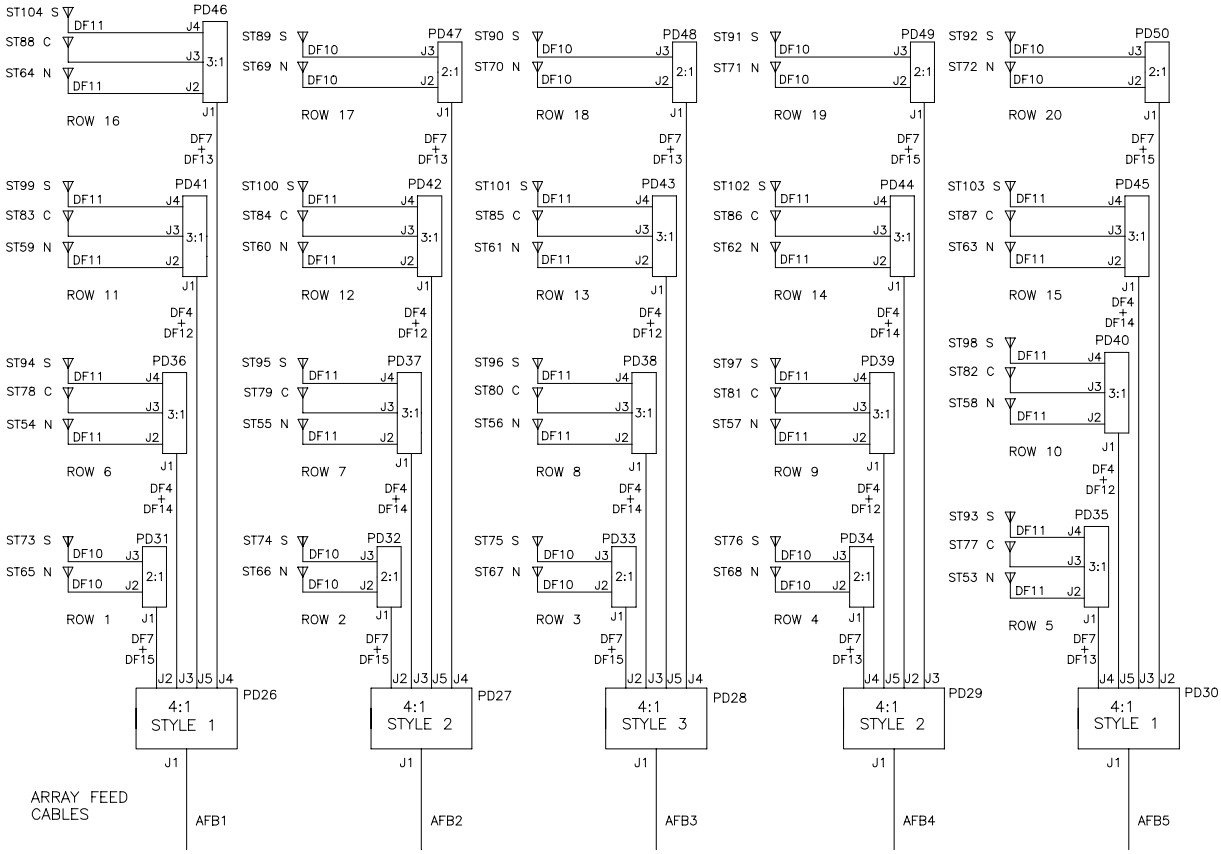

Figure 7-29 Upper Array 2 (E, W) Antenna Cabling Diagram

7.7 Acronyms

Table 7-13 Acronyms

AF	Antenna Feed
BITE	Built-In Test Equipment
BSU	Beam Steering Unit
dB	Decibel
CCA	Circuit Card Assembly
DC	Direct Circuit
DF	Distribution Feed
DPDT	Double Pole Double Throw
EL TECH	Electronic Technician
EIA	Electronics Industry Association
FLT	Fault
LED	Light Emitting Diode
LRU	Line Replaceable Unit
MHz	Megahertz
PCC	Profiler Control Center
PD	Power Divider
PHD	Phase Delay
PMT	Portable Maintenance Terminal
PS	Power Supply
RF	Radio Frequency
RFI	Radio Frequency Interference
SM	Station Monitor
SP	Signal processor
SPDT	Single Pole Double Throw
ST	Sticks
SW	Switch
TDR	Time Domain Reflectometer
TSW	T Switch
VSWR	Voltage Standing Wave Ratio
WPS	Wind Profiler System

8 Profiler Communications

In general, NOAA wind profilers have two independent communications systems; the *Landline communication link* and the *GOES communication link*. Figure 8-1 illustrates the flow of data between the profiler sites and the Profiler Control Center (PCC) over these links.

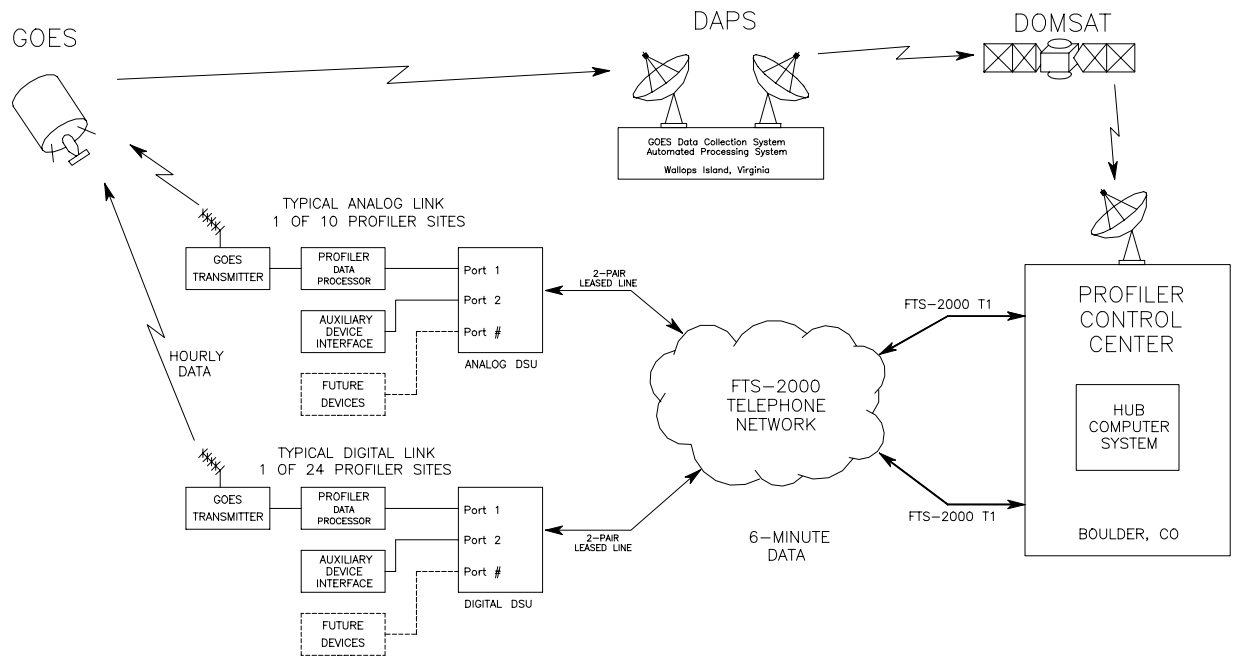

Figure 8-1 Profiler Network Data Flow

8.1 Landline Communications System

The Landline Communication System (or Landline link) provides two-way communications between the profilers and the Hub. The profilers send wind data and status information to the Hub at 6-minute intervals, and the Hub uses this link to transmit commands and SARSAT turnoff schedules to the profiler.

The Landline links are comprised of FTS-2000 leased lines which are multiplexed onto several T1 lines to Boulder, CO. As illustrated in Figure 8-1, radar data are transmitted from the profilers to the Hub using a Data Service Unit (DSU). The DSU at the profiler site is located in the Equipment Cabinet above the RF Generator (see Figure 4-1).

A DSU is a multi-channel modem that uses Time Division Multiplexing (TDM) to provide multiple, independent, RS-232 ports capable of interfacing with any device that supports RS-232 serial communications. One of two versions of the DSUs are used at profiler sites (depending on the capabilities of the local phone company). The first version, a digital DSU, is used at the majority of profiler sites. The second version, an analog DSU, is used at sites where the local phone company does not support digital communications service.

The DSUs at the profiler sites are leased from, and maintained by AT&T Paradyne Services. Under some circumstances, El-Techs may be asked to power cycle the communications equipment breaker, but in general, NWS technicians are not responsible for maintenance of this equipment and should avoid disrupting the AC power to this system unless it is absolutely necessary.

There are minor physical and functional differences between digital and analog DSUs. Section 8.1.1 and Section 8.1.2 provide greater detail about the AT&T Paradyne model 3610 digital DSU, and the model 3920 analog DSU.

8.1.1 Model 3610 Digital Data Service Unit (DSU)

The AT&T Paradyne model 3610 DSU is a stand-alone digital version of the Comsphere 3000 series modems. The 3610 DSU has an integral Time Division Multiplexer (TDM) that provides multiplexing of six independent RS-232 ports on a single leased line (point-to-point) circuit. The aggregate leased line operates at 9600 baud and utilizes V.32t and V.32bis for modulation control. Each of the DSU's six ports have user-configurable settings for baud rate, data bits, stop bits, and parity. All six ports can be utilized providing that the sum of baud rates for all utilized ports does not exceed 9600 baud.

The front panel of the 3610 DSU provides status indicator LEDs and a two-line alphanumeric display that can be used to examine or modify configuration parameters (refer to Figure 8-2). The display is menu-driven and is manipulated using the arrow and function keys on the front panel.

The rear panel of the 3610 DSU provides six DB-25 female connectors (labeled EIA Port 1 - Port 6) to interface with RS-232 devices. The power supply for the DSU is external to the unit and plugs into the circular jack labeled POWER. The phone cable plugs into the type RJ-8 phone jack labeled LINE (refer to Figure 8-3).

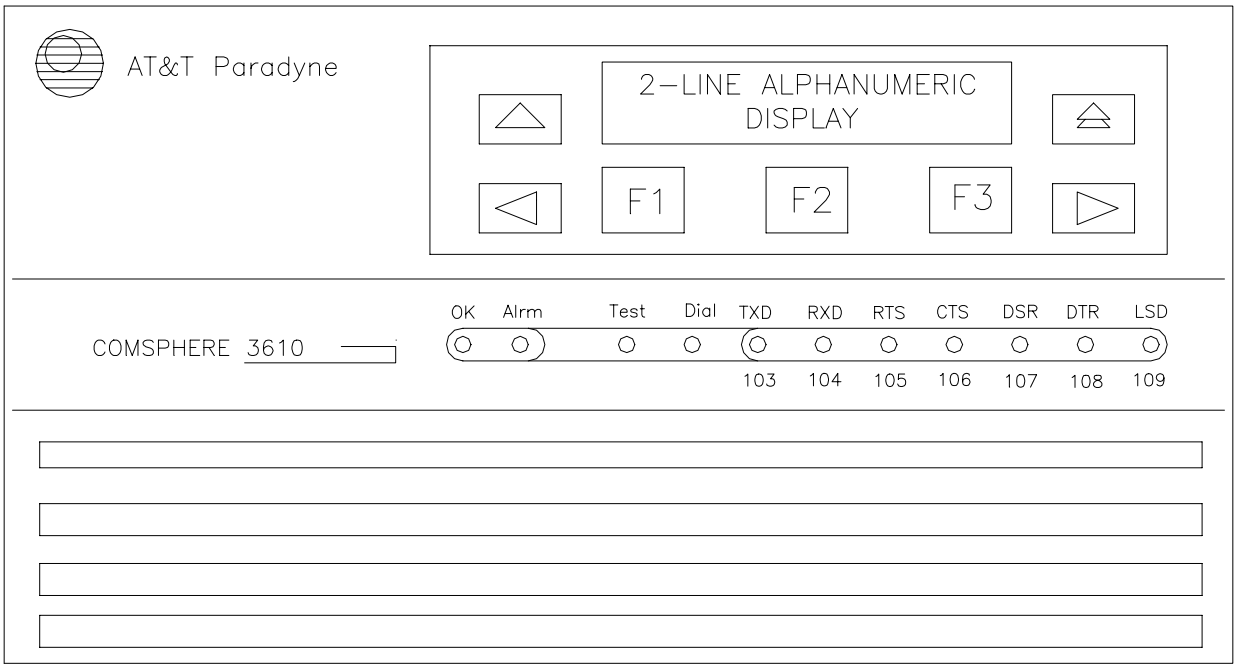

Figure 8-2 Model 3610 Data Service Unit Front Panel

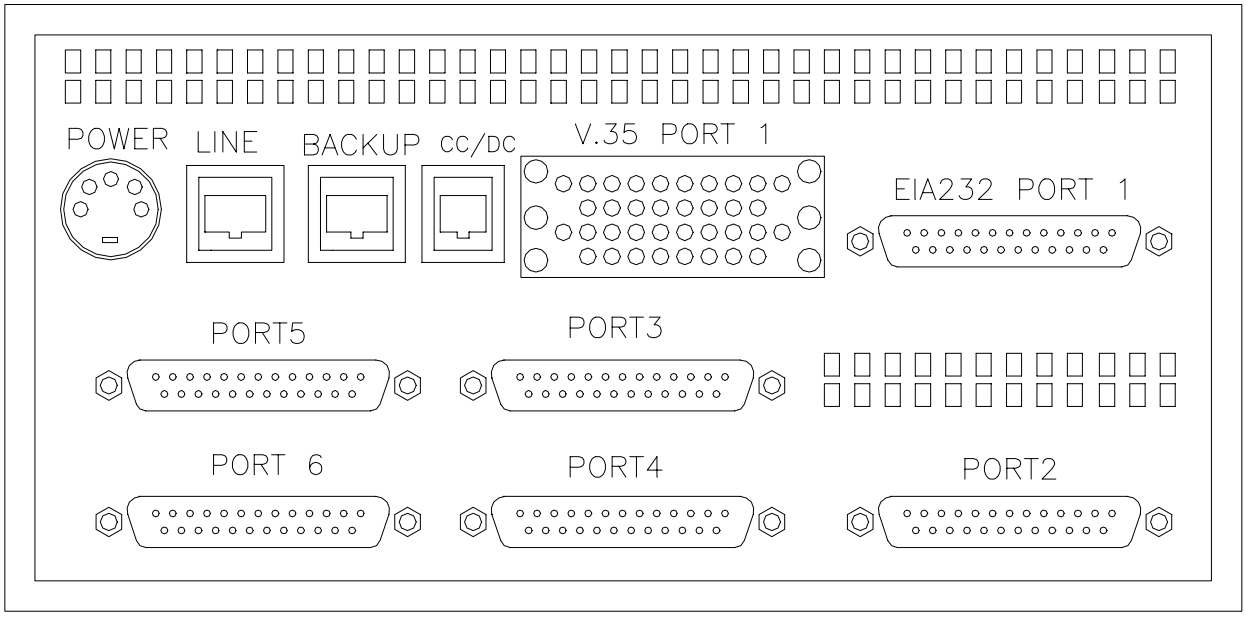

Figure 8-3 Model 3610 Data Service Unit Rear Panel

At some profiler site locations, if the line signal quality is poor, the local phone company may choose to install a Digital Data Station Termination module (DDST). The DDST enables phone company technicians to fine-tune the transmit and receive levels of the leased line. The DDST is property of the local phone company, and NWS technicians have no responsibility for maintaining this piece of equipment. The DDST (if installed) is located in the Equipment Cabinet next to the DSU (refer to Figure 4-1). For reference purposes, a communications interconnection diagram for sites with digital DSUs is provided in Figure 8-4.

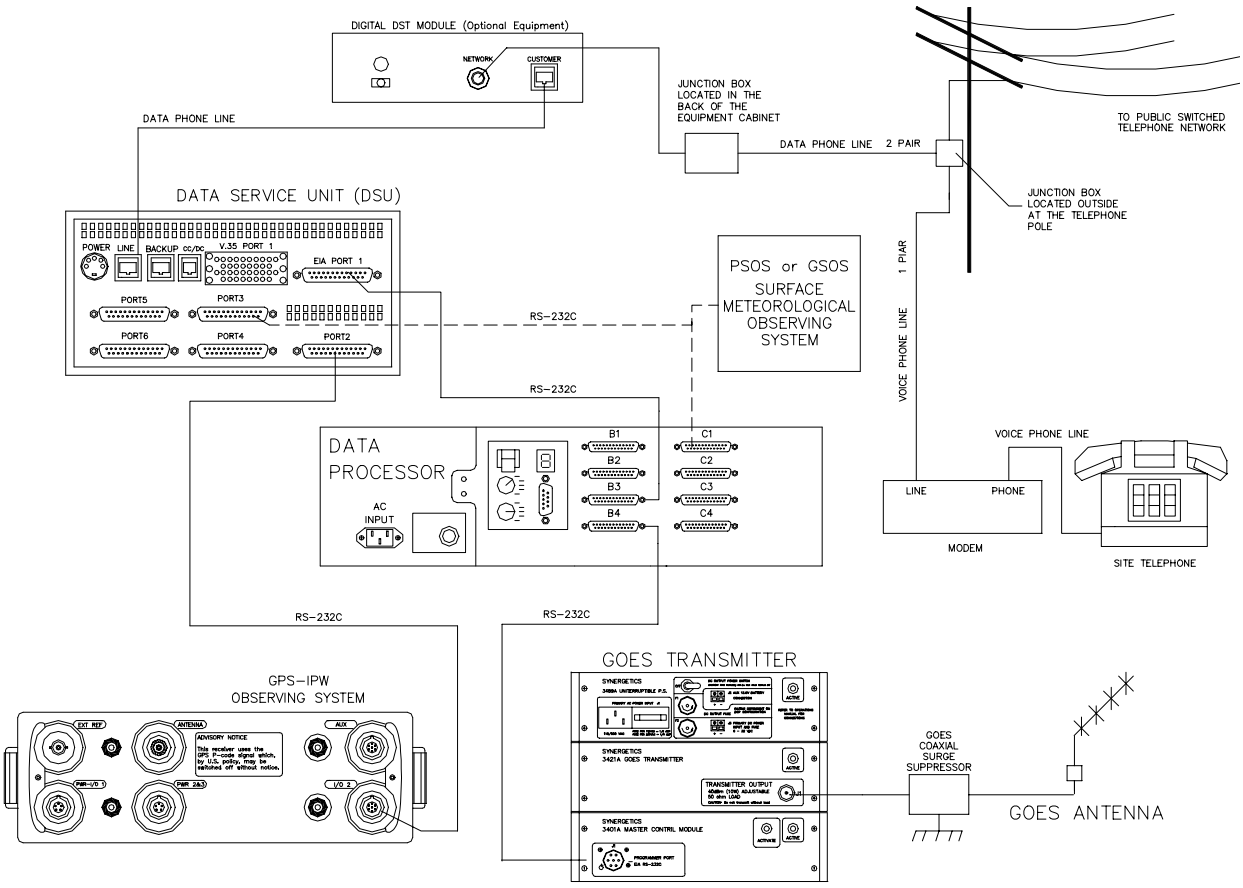

Figure 8-4 Communications System Interconnections Using a 3610 DSU

8.1.2 Model 3920 Analog Data Service Unit (DSU)

The AT&T Paradyne model 3920 DSU is a stand-alone analog version of the Comsphere 3000 series modems. The 3920 DSU has an integral Time Division Multiplexer (TDM) that provides time division multiplexing of four independent RS-232 ports on a single leased line (point-to-point) circuit. The aggregate leased line operates at 9600 baud and utilizes V.32t and V.32bis for modulation control. Each of the DSU's four ports have user-configurable settings for baud rate, data bits, stop bits, and parity. All four ports can be utilized providing that the sum of baud rates for all utilized ports does not exceed 9600 baud.

The front panel of the 3920 DSU provides status indicator LEDs and a two-line alphanumeric display that can be used to examine or modify configuration parameters (refer to Figure 8-5). The display is menu-driven and is manipulated using the arrow and function keys on the front panel.

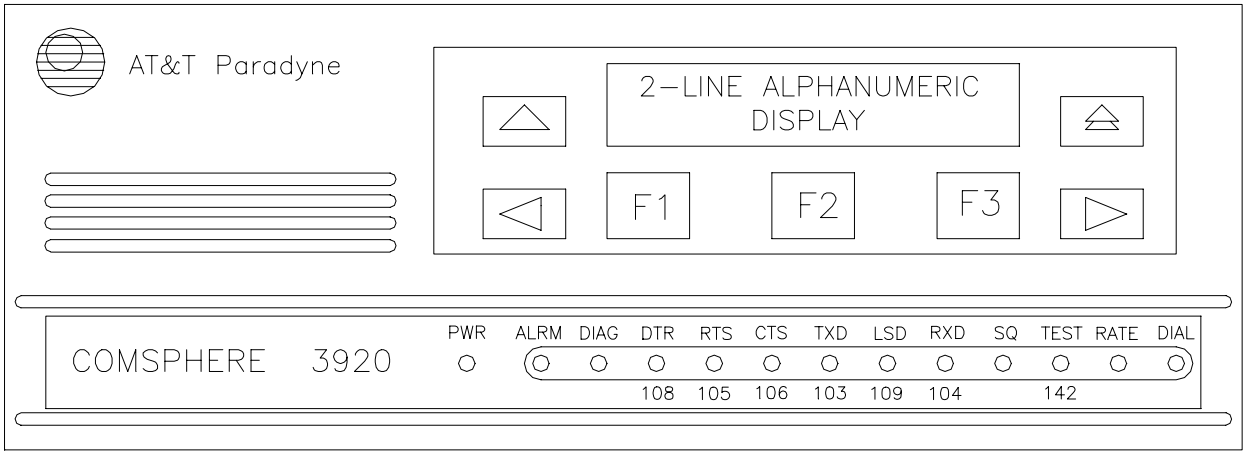

Figure 8-5 Model 3920 Data Service Unit Front Panel

The rear panel of the 3920 DSU provides four DB-25 female connectors (labeled DTE 1 - DTE 4) to interface with RS-232 devices. The power supply for the DSU is external to the unit and plugs into the circular jack labeled PWR. The phone cable plugs into the type RJ-8 phone jack labeled LEASED (refer to Figure 8-6)

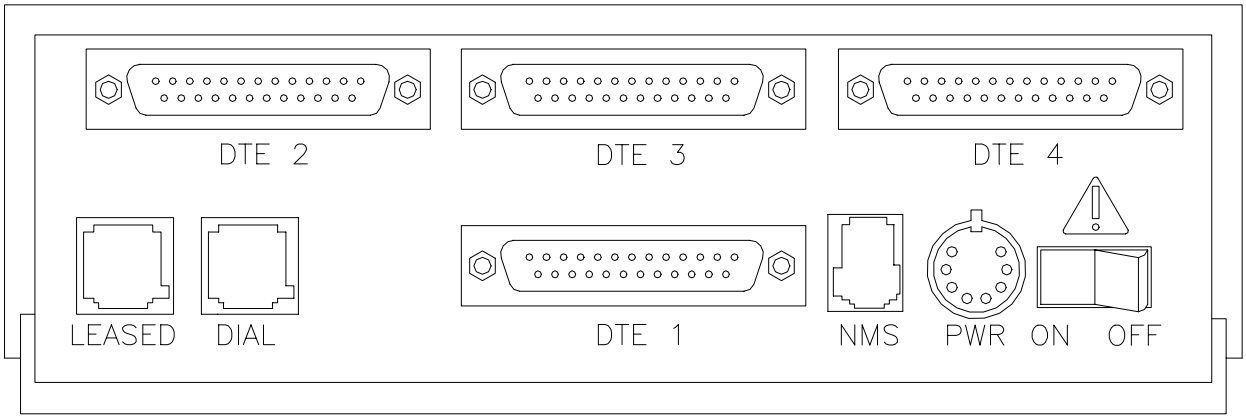

Figure 8-6 Model 3920 Data Service Unit Rear Panel

Profiler sites using analog DSUs require an additional piece of equipment at the site to terminate the analog leased-line. This device is referred to as a Data Station Termination Module (DST). The DST is provided, owned, and maintained by the local telephone company in the area where the profiler is located. The DST is used to adjust the gain and attenuation in the transmit and receive channels of the leased line, as well as provide optimum amplitude equalization on the transmit channel. Any adjustments or modifications of the DST should be done only by the local phone company.

The DST is located above the RF Generator in the Equipment Cabinet (refer to Figure 4-1). For reference purposes, a communications interconnection diagram for sites with analog DSUs is provided in Figure 8-7.

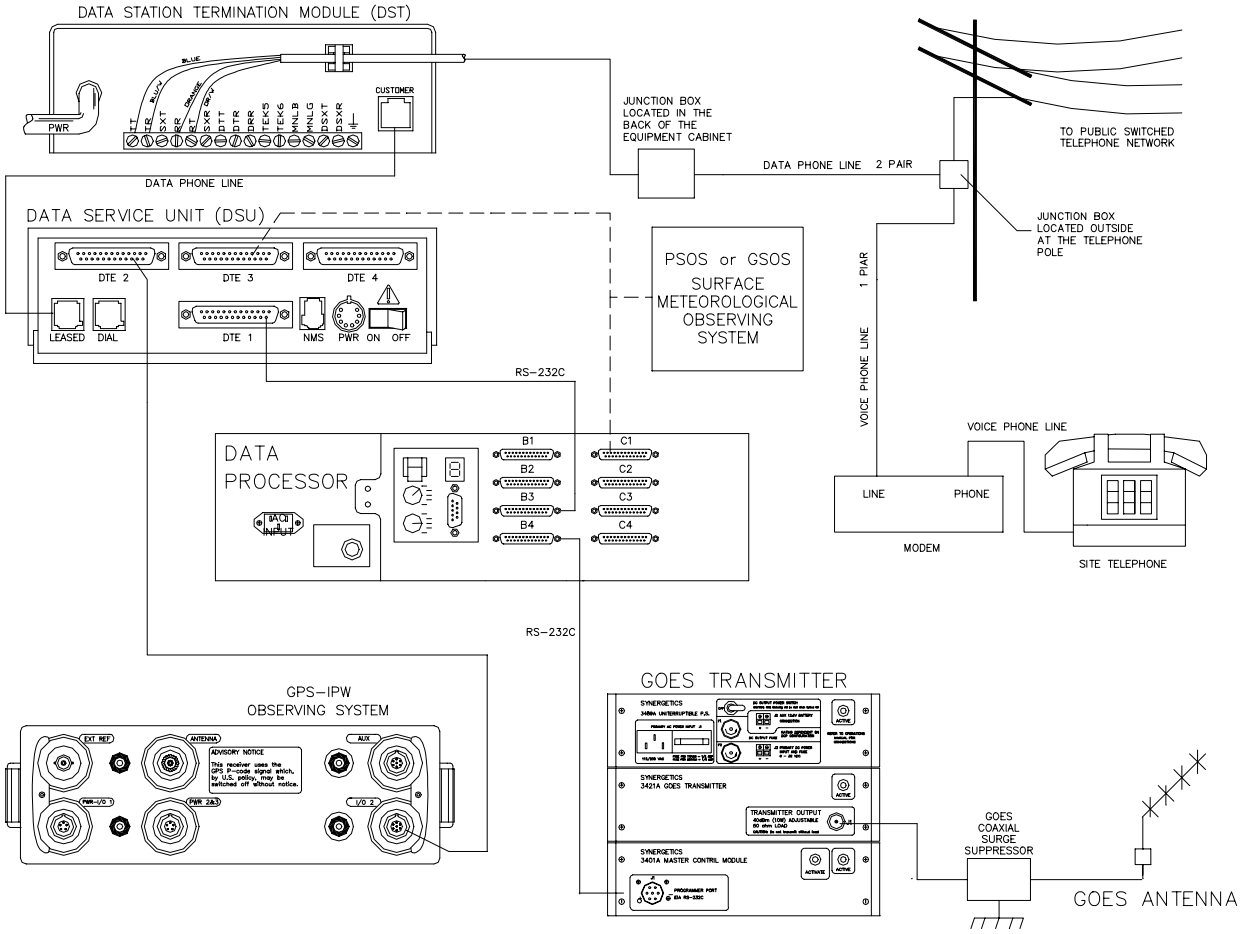

Figure 8-7 Communications System Interconnections Using a 3920 DSU

8.2 GOES Communications System

The profiler Data Processor calculates hourly winds by averaging the previous hours 6-minute data samples. The hourly wind data, select 6-minute data, and status data are transmitted to the PCC Hub using the GOES Communications System (or GOES link). A profiler GOES data transmission is allocated 1 minute per hour, and depending on the site configuration, will transmit between minute 1 and minute 18 of the hour. The path of hourly GOES data from the profiler site to the PCC is illustrated in Figure 8-1.

The GOES Communications System consists of a GOES Assembly and a Crossed Yagi antenna. The GOES Assembly is located inside the shelter below the breaker panel in a white NEMA enclosure. As illustrated in Figure 8-8, the GOES Assembly consists of four components: the 3489A Uninterruptible Power Supply, the 3421A GOES Transmitter, the

3401A Master Control Module (MCM), and a coaxial surge suppressor. These components are described in the following paragraphs.

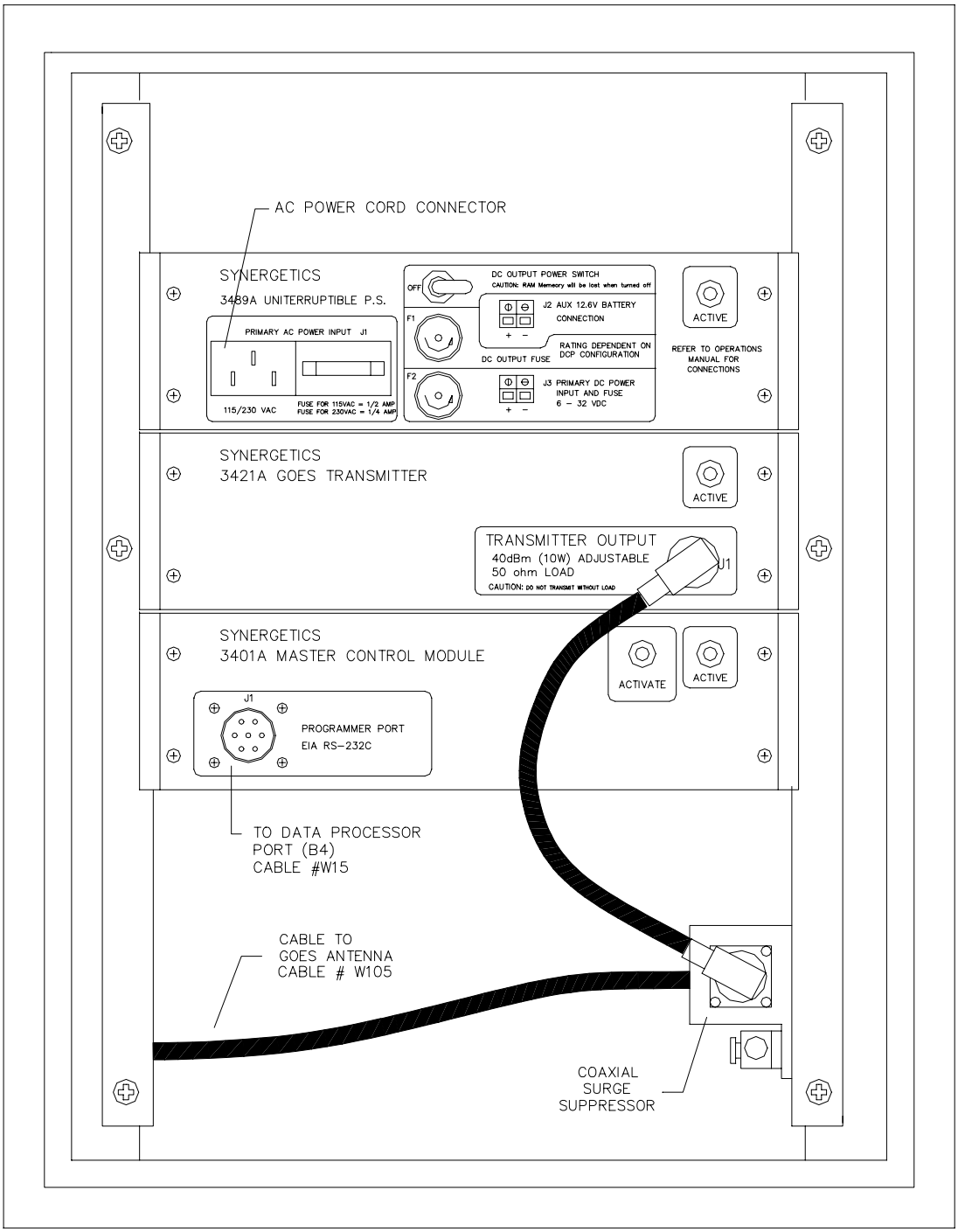

Figure 8-8 GOES Assembly Front Panel

3489A Uninterruptible Power Supply

The Synergetics Model 3489A Uninterruptible Power Source (UPS) provides the MCM and GOES Transmitter with uninterrupted 12 VDC power and provides a trickle charge to a battery within the UPS. Power to the GOES Assembly is shut off by turning the locking toggle switch on the front panel of the UPS to OFF.

The ACTIVE LED on the front panel of the UPS indicates the amount of current being drawn from the UPS charging circuit. Intermittent blinking of the ACTIVE LED indicates the internal battery is being trickle-charged. Constant illumination of the ACTIVE LED indicates that greater amounts of current are being drawn.

3421A GOES Transmitter

The Synergetics Model 3421A GOES Transmitter is a 10-Watt frequency-agile UHF transmitter designed to relay digitally encoded data to any one of several operational geosynchronous satellites managed by the United States, Japan, or the European Space Agency. The GOES Transmitter receives data from the MCM through an interface called the S-34 bus, and transmits these data to a GOES satellite at a rate of 100 baud. When the unit is transmitting, the ACTIVE LED on the front panels of the GOES Transmitter is illuminated. The GOES Transmitter is equipped with an exceptionally stable oscillator (the GOES Clock) used by the Data Processor as the profiler system time reference.

3401A Master Control Module

The Synergetics 3401A Master Control Module (MCM) is the brain of the GOES Assembly. The MCM utilizes a 6802 microprocessor and runs the SAT-SOFT firmware developed by Synergetics. SAT-SOFT enables the profiler Data Processor to down load specific operating parameters to the MCM, and transfer profiler data to the MCM for hourly GOES transmissions.

The connection between the Data Processor and the MCM is a standard 1200- baud RS-232 interface. To communicate with the MCM, the Data Processor must assert the Data Terminal Ready (DTR) signal to wake the MCM from a sleep mode. When the MCM is awakened, the ACTIVE LED in the front panel of the MCM illuminates. The front panel of the MCM has a push button labeled ACTIVATE. This button can be used to manually awaken the MCM from sleep mode.

Coaxial Surge Suppressor

The PolyPhaser IS-50NX-C2 coaxial surge suppressor prevents transient voltage spikes caused by lightning strikes from entering the system through the GOES antenna.

8.2.1 GOES Assembly Replacement

1. Open the access door on the front of the GOES enclosure.

2. Turn off the *DC OUTPUT POWER* switch on the front panel of the 3489A Uninterruptible Power Supply and remove the AC power cord from the front panel of the unit (see Figure 8-8).

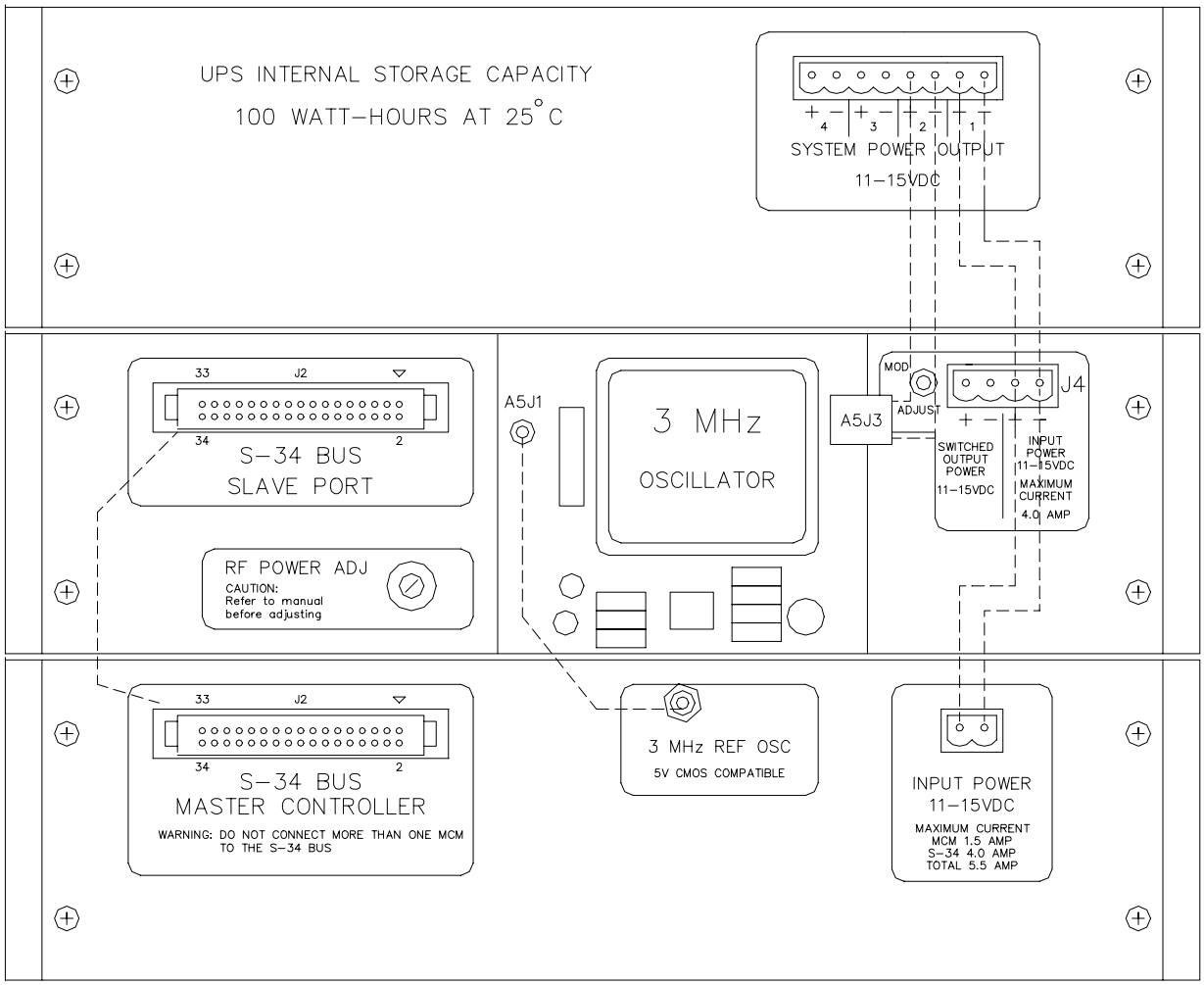

Figure 8-9 GOES Assembly Rear Panel Interconnections

3. Disconnect the coaxial cable from port J1 (transmitter output) on the front panel of the 3421A GOES Transmitter.

4. Disconnect the antenna cable from the coaxial surge suppressor.

5. Disconnect the communications cable from port J1 on the front panel of the 3401A Master Control Module.

6. Remove the braided ground cable from the coaxial surge suppressor lug.

7. Remove the mounting screws from the face of the rack angles of the GOES Assembly and remove the entire assembly from the cabinet.

8. Remove the rack angles from the GOES Assembly and transfer them to the new GOES Assembly.

9. Inspect the rear panel of the new GOES Assembly to verify that all cable connectors identified in Figure 8-9 are tight and properly connected.

10. Mount the new assembly in the NEMA cabinet and fasten the rack angles with the mounting screws.

11. Connect the braided ground cable to the lug of the coaxial surge suppressor and tighten the lug securely (refer to Figure 8-11).

12. Reconnect the AC power cable to the front panel of the UPS.

13. Reconnect the antenna cable to the coaxial surge suppressor.

14. Reconnect the coaxial cable to connector J1 on the front panel of the GOES Transmitter.

15. Reconnect the communications cable to connector J1 on the front panel of the MCM.

16. Turn on the *DC OUTPUT POWER* on the front panel of the 3489A by turning the locking toggle switch of the UPS to *ON*.

17. Close the access door on the front of the GOES enclosure.

8.2.2 GOES Assembly Master Control Module Initialization

The 3489A UPS battery provides 12 VDC power to the GOES Assembly until the DC OUTPUT POWER SWITCH (on the UPS front panel) is switched to the *OFF* position. When the UPS power source is removed from the GOES Assembly, the Master Control Module loses the contents of its memory and must be re-initialized using the procedures described below.

1. Log onto the Data Processor using the Portable Maintenance Terminal (PMT). This may take 1 - 2 beam-cycles because the system time provided by the GOES Clock is not available to the Data Processor.

2. When you have logged on, put the profiler in MAINTENANCE MODE and set the system time from the PMT System Parameters Menu. To synchronize the system time clock with a precise time standard, call WWV at (303) 499-7111 or contact the PCC for assistance.

3. Once the system time has been set, perform a Re-time System Cycle (System Initialization) command from the PMT System Operations Menu. This forces the Data Processor to down-load operating parameters to the GOES Assembly and synchronize the Data Processor and MCM clocks.

4. Verify that the MCM has been initialized correctly by referring to the PMT GOES MCM Menu and determining that the GOES Date and Time, Battery Voltage, and Temperature parameters appear on the lower portion of the screen as illustrated in Figure 8-10.

   If these values do not appear on the screen, repeat the Re-time System Cycle command. Several attempts may be required before the MCM initializes correctly. If these attempts are unsuccessful, contact the PCC for assistance.

8.2.3 GOES Coaxial Surge Suppressor Replacement

As with any surge protection device, the GOES Coaxial Surge Suppressor can be damaged, or rendered ineffective by a lightning strike. Since there is no way to field-test the effectiveness of the GOES Coaxial Surge Suppressor, generally, when a GOES antenna is replaced, the surge suppressor is also replaced as a measure of precaution.

1. Open the access door on the front of the GOES enclosure.

2. Turn off the DC power switch on the front panel of the 3489A Uninterruptible Power Supply (see Figure 8-8).

```
4 WPS-234, PASSWORD REQUIRED                        Maintenance
5  [SIM] This could take 6 minutes
6 COMMAND EXECUTED
                     GOES MCM Menu


 Goes Id                      750126DA          00000000-FFFFFFFE Hex
 Channel Number               093               001-199 Decimal
 Transmit Frequency           1                 1..6
 Preamble Length              S                 S[hort] or L[ong]

 . Goes Date and time         00/01/30 12:35:54 YY/MM/DD HH:MM:SS
 . Next Transmit time         13:02:03          HH:MM:SS
 . Temperature                028               Degrees Celsius
 . Battery Voltage            137               Tenths of Volts
 . Min. Battery Voltage       122               Hundredths of Volts
    During Last Xmit
 . Forward and Reflected      4020              dBm
    Transmitted power




1 Prev  2       3       4       5        6Enter  7     8     9      0 Dos
```

Figure 8-10 PMT GOES Master Control Module (MCM) Menu

3. Remove the two coaxial cables from the coaxial surge suppressor.

4. Remove the #10-24 machine screw that secures the ground lug and surge protector to the rack rail (see Figure 8-11).

5. Place the #10-24 machine screw through the ground lug, brass shim, and new surge protector, and fasten it to the rack rail. Check to be sure that the *Equipment* port of the surge suppressor is facing forward as illustrated in Figure 8-11.

6. Reconnect the two coaxial cables to the surge protector.

7. Turn on the DC power switch on the front panel of the 3489A Uninterruptible Power Supply.

8. Close the access door on the front of the GOES enclosure.

9. Initialize the GOES Assembly Master Control Module as described in Section 8.2.2

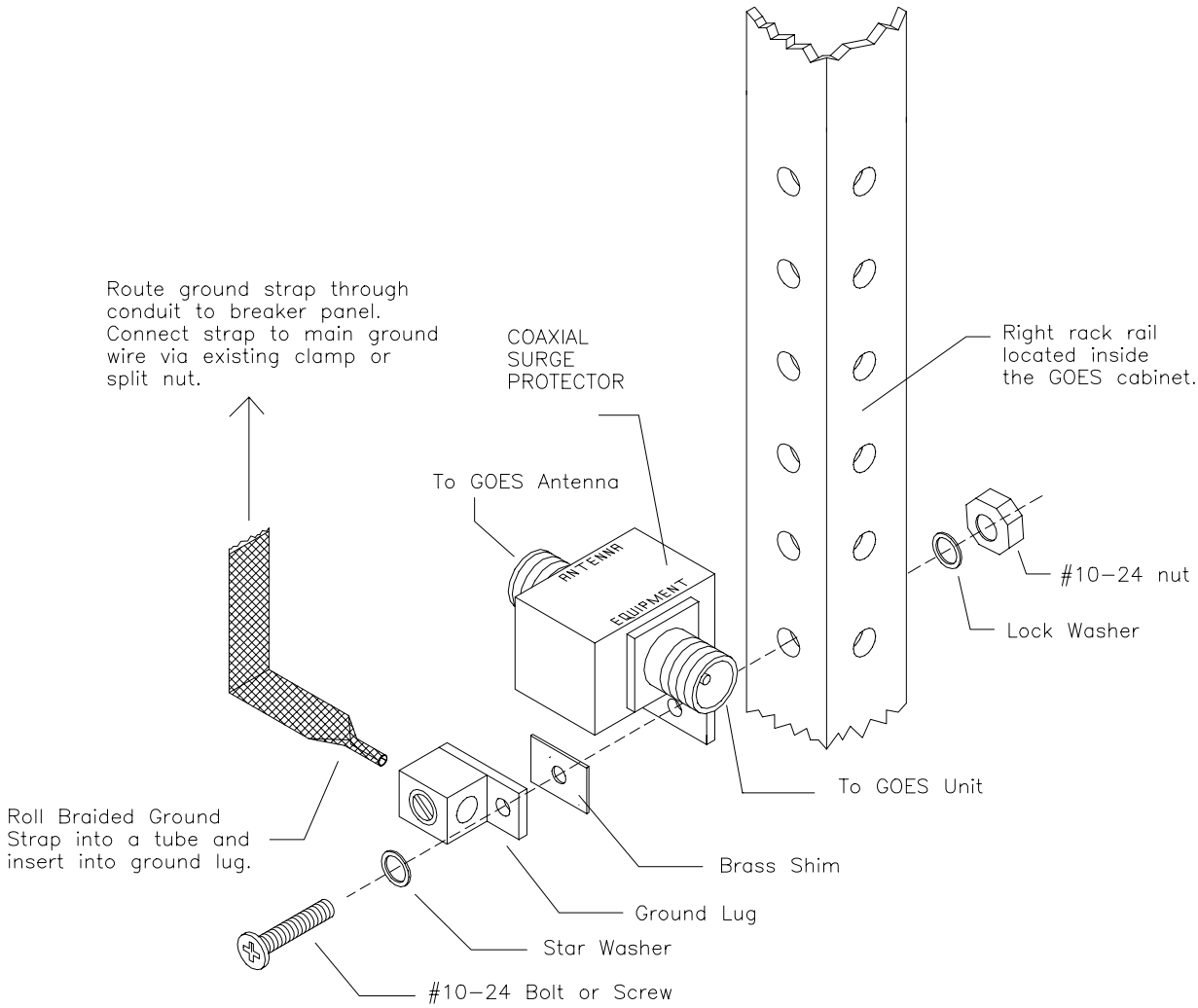

Figure 8-11 GOES Surge Suppressor Replacement

8.2.4 GOES Antenna Replacement

1. Open the access door on the front of the GOES enclosure.

2. Turn off the *DC OUTPUT POWER* switch on the front panel of the 3489A UPS (see Figure 8-8).

3. Carefully cut away the sealing tape covering the type N connectors just directly below the Antenna on the Antenna Mast.

4. Disconnect the antenna cable at the type N connector.

5. Loosen the set screws on the antenna mast and pull the antenna free of the top of the mast.

6. Assemble the new antenna according to the instructions included with the unit.

7. Install the new antenna on the mast.

8. Connect the type N connector to the antenna cable. Seal the coaxial junction with self-vulcanizing rubber tape and then apply a layer of electrical tape. Coat the outside of the tape with UV silicone rubber or Scotch Coat.

9. Orient the new antenna in the correct direction using the following information on GOES Antenna pointing directions.

   Because the beam width for the Synergetics Model 18B Crossed Yagi antenna is 47°, pointing inaccuracies of approximately 5° degrees will have a negligible effect on signal strength. This degree of accuracy is easily attained using a hand-held compass or pocket transit.

   Refer to Table 8-1 for the GOES antenna pointing angles for NPN profiler sites, and (if available) use a compass or pocket transit to measure all azimuths and elevations. (If there is no means to measure antenna elevation, an alternate method would be to adjust the new antenna elevation to match the old antenna elevation.) Adjust the antenna to the specified azimuth and elevation and tighten the set screws.

10. Turn on the *DC OUTPUT POWER* switch on the front panel of the UPS.

11. Close the access door on the front of the GOES enclosure.

12. Initialize the GOES Assembly Master Control Module as described in Section 8.2.2

Table 8-1 Profiler Site GOES Antenna Orientation Parameters

Site Location	State	Magnetic Declination (Deg)	Site Elevation (Meters)	Site Orientation From True North (Deg)	GOES Antenna Elevation (Deg)	GOES Antenna Azimuth (Deg)
Aztec	NM	12	1,902	0	43	198
Bloomfield	MO	1	130	-19	45	180
Syracuse	NY	-12	122	0	38	200
Blue River	WI	0	226	-17	23	235
Central	AK	28	259	10	14	150
Conway	MO	3	390	-16	37	218
Dequeen	AR	4	195	-14	47	173
Fairbury	NE	6	433	-10	36	211
Glennallen	AK	22	564	52	17	150
Granada	CO	9	1,155	-6	40	206
Haskell	OK	5	212	-16	45	171
Haviland	KS	7	648	-10	43	167
Hillsboro	KS	6	447	-8	38	212
Jayton	TX	8	707	-11	44	209
Lamont	KS	6	306	-12	56	212
Lathrop	MO	4	297	-13	36	215
McCook	NE	8	800	-6	40	165
Medicine Bow	WY	12	1,997	1	38	199
Merriman	NE	9	991	-4	37	164
Neligh	NE	6	524	-8	35	210
Neodesha	KS	5	255	-14	44	172
Okolona	MS	1	125	-22	47	182
Palestine	TX	5	119	-17	45	216
Platteville	CO	11	1,524	0	39	201
Purcell	OK	6	331	-13	41	213
Slater	IA	3	315	-11	33	215
Talkeetna	AK	24	137	130	15	145
Tucumcari	NM	9	1,241	-6	43	204
Vandenberg	CA	15	149	0	48	185
Vici	OK	7	648	-10	44	166
White Sands	NM	10	1,224	-5	46	201
Winchester	IL	1	170	-16	33	219
Winnfield	LA	3	93	-20	48	177
Wood Lake	MN	4	319	-9	36	173

9 Radio Acoustic Sounding System (RASS)

The Radio Acoustic Sounding System (RASS) option enables a wind profiler to simultaneously measure vertical profiles of virtual temperature in the lower troposphere in addition to the three orthogonal wind radial velocities (east, north, vertical).

Currently there are no 449 MHz Profiler sites equipped with RASS. This section has been included as a place-holder for future use. Future releases of this document will include information about RASS when applicable.

THIS PAGE INTENTIONALLY LEFT BLANK

10 GPS Surface Observing System (GSOS)

The GPS Surface Observing System (GSOS) is a low-cost meteorological data acquisition system originally designed to provide barometric pressure, air temperature and humidity measurements required by the GPS-IPW Observing System to calculate water vapor measurements (see Figure 10-1). GSOS was developed through a joint effort between the Forecast Systems Laboratory (FSL) and the National Data Buoy Center (NDBC). NDBC manufactures the GSOS assemblies, serves as the repair facility, and provides depot support for GSOS components. Some of the GSOS key features are:

Designed using COTS Components	GSOS system components are commercial off-the-shelf parts.
Wide Operational Temperature Range	-40° C to $+40^{o}$ C operational temperature range.
All Digital Sensors	High quality digital sensors manufactured by Vaisala.
Expandible Architecture	Expandable architecture allows anemometer and precipitation sensors to be added to the base configuration.
Flexible Communications Options	Communication interface options include RS422/ RS485 or RS-232.
Several Mounting Options	Mounting hardware allows the Payload to be affixed to a variety of fence post diameters or rhone towers.
Fold-down Arm	Fold-down arm provides easy access to sensors for maintenance or replacement.

Figure 10-1 GSOS Payload Assembly

10.1 System Description

As shown in Figure 10-2, GSOS consists of two primary assemblies; the Payload, and the Power Supply and Communications Interface. The payload communication interface is RS-485/RS-422, which allows the power supply and communications interface to be located up to 4000 feet from the payload. The transducers are self contained digital sensor/transmitters that communicate with the controller via RS-485 and RS-232 interfaces. The interface between the payload and power supply and communications interface is protected by two surge suppression devices.

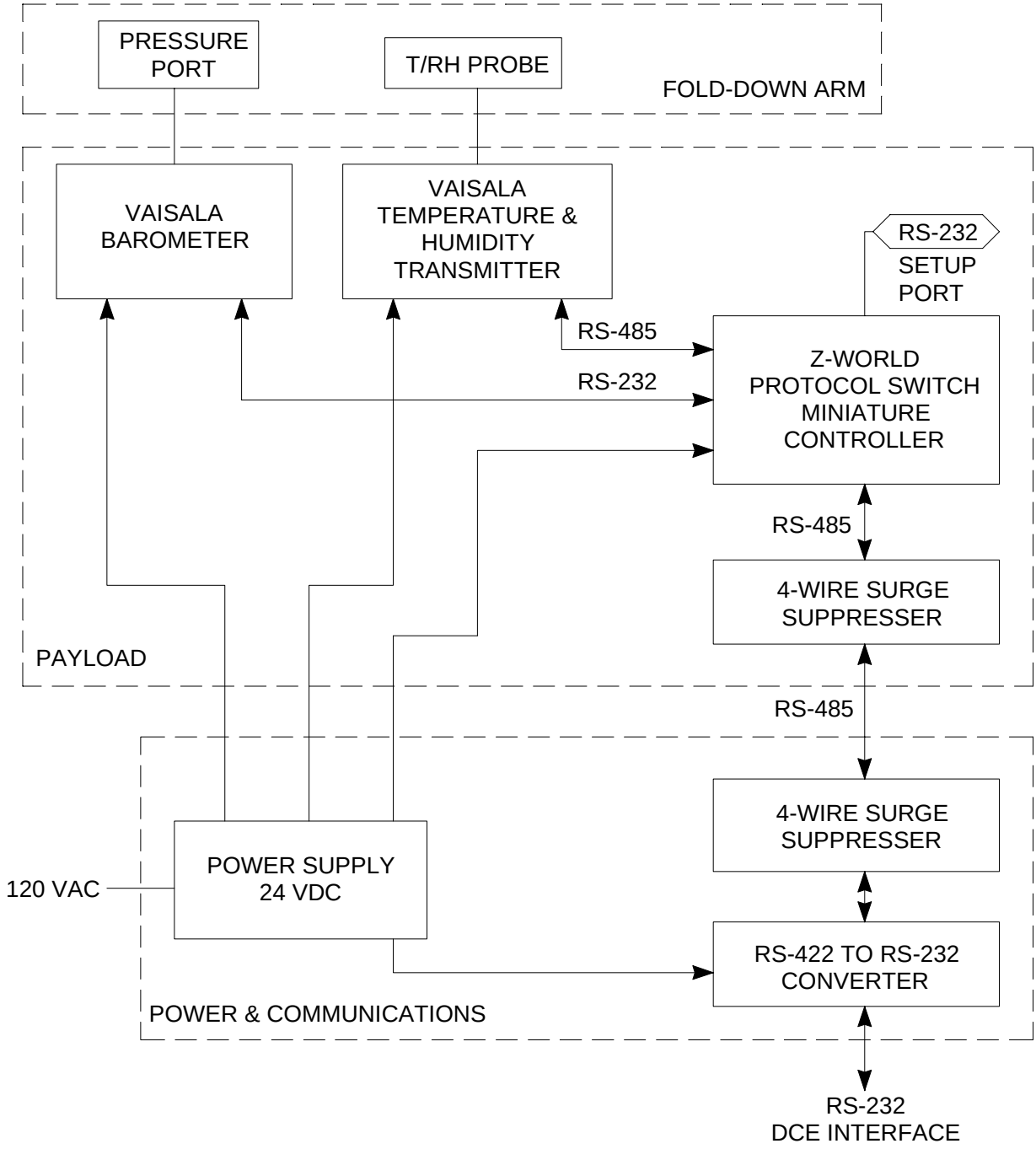

Figure 10-2 GSOS Block Diagram

10.1.1 Payload

The GSOS Payload electronics are housed in a Hoffman NEMA 4X enclosure containing a four-slot card cage and interconnection panel (see Figure 10-3). The electronic components housed in the enclosure consist of a 4-wire communications surge suppressor, micro controller, barometric pressure sensor, and an integrated temperature/ humidity sensor. Each component is mounted on a removable shelf for easy access and replacement. Figure 10-4 provides a detailed wiring schematic for the GSOS Payload Assembly. All payload interface connection are located on the bottom of the enclosure as shown in Figure 10-5

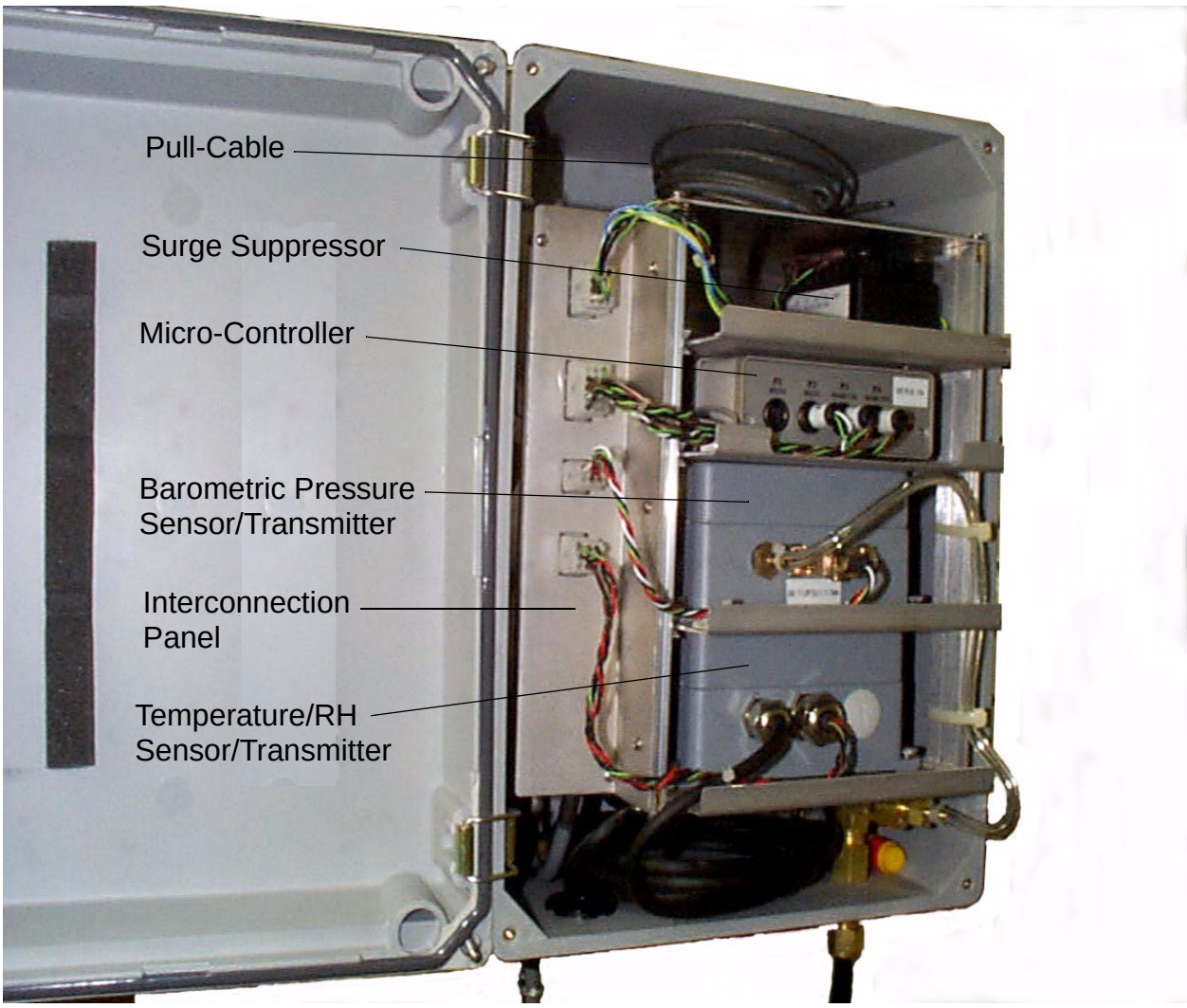

Figure 10-3 GSOS Payload Electronics Assembly

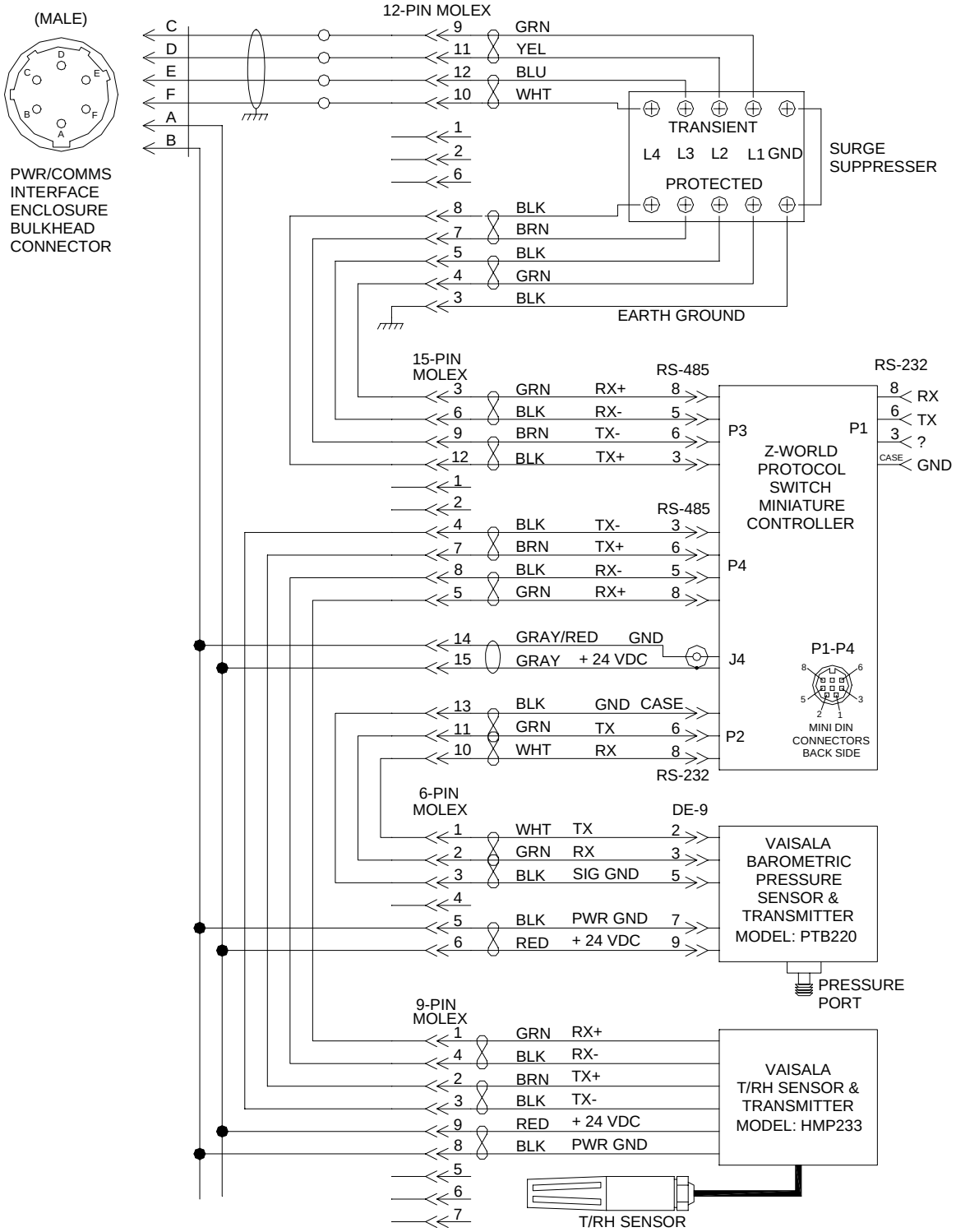

Figure 10-4 GSOS Payload Wiring Schematic

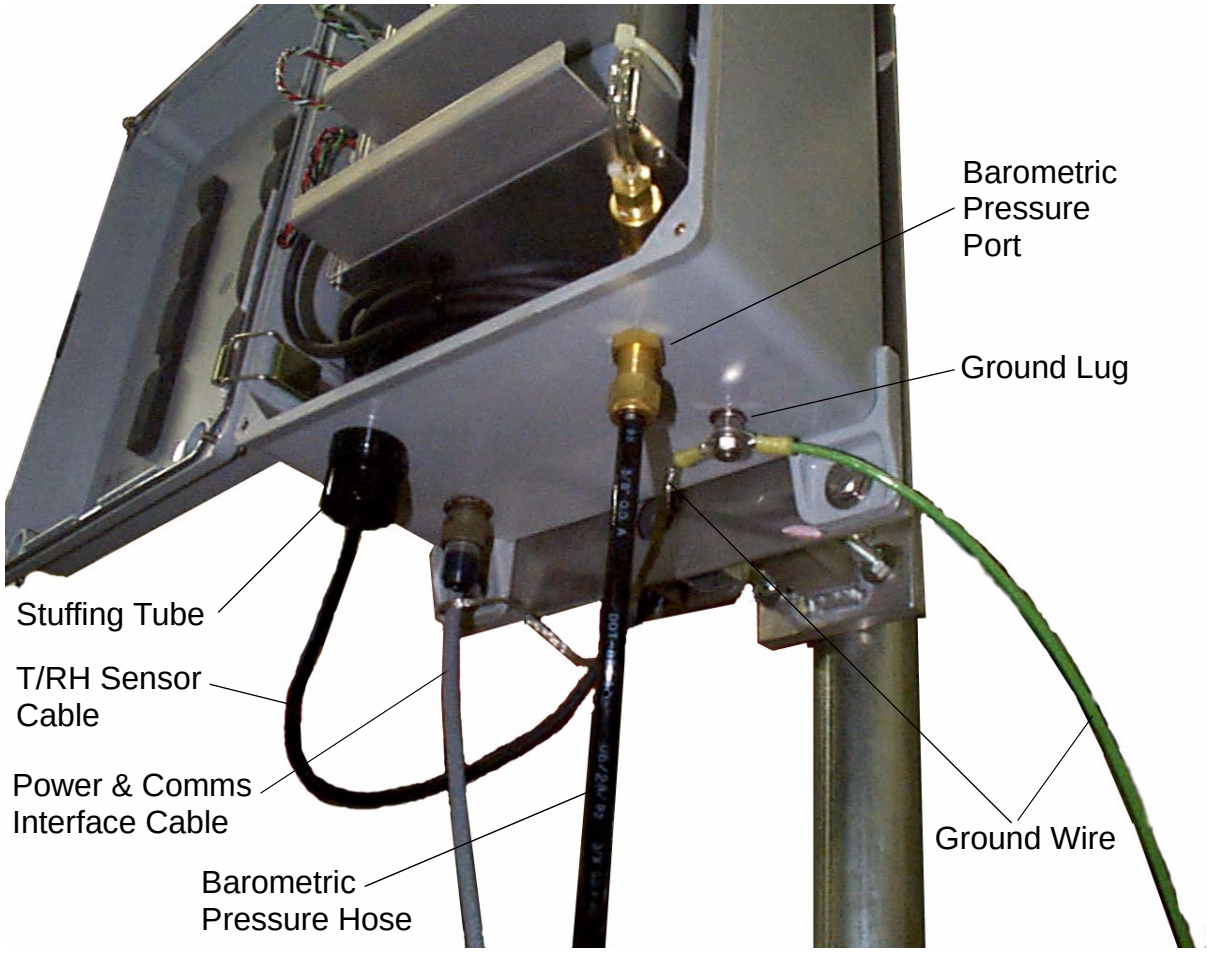

Figure 10-5 GSOS Payload Interfaces

10.1.1.1 Controller Assembly

The GSOS Controller Assembly is a Z-World model BL1300 Protocol Switch Micro-Controller build around the 9 MHz Z180 micro-processor chip. The controller has a built-in Real-Time Clock and Watch-Dog Reset Timer. The controller has two RS232 serial ports (P1 and P2) and two serial port (P3 and P4) that can be configured as RS485/ RS422 or RS232 (see Figure 10-6). The controller is equipped with sufficient SRAM to store 7-days of data at 5-minute intervals. However, should the controller lose power, all data samples will be lost. Critical site specific parameters are stored in non-volatile memory and are un-affected by loss of power. The DC power input connector is located on the controller rear panel (see Figure 10-7) is labeled as *+9 VDC*. However, the controller will operate with any DC supply voltage between 9 VDC and 36 VDC.

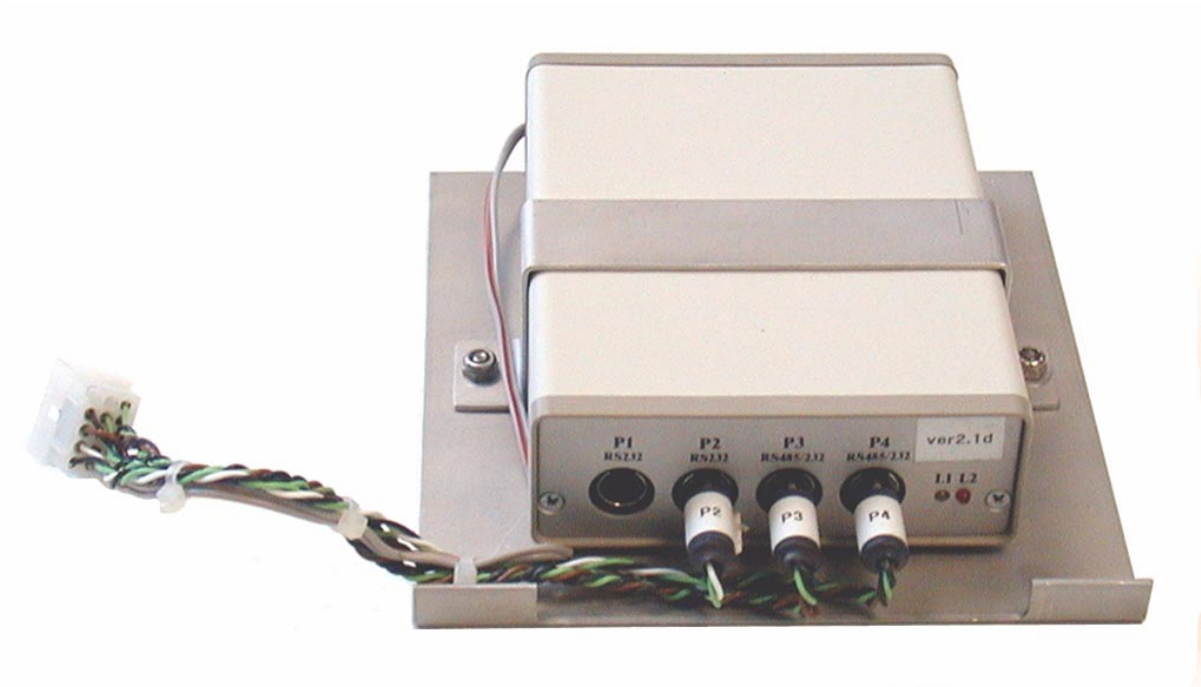

Figure 10-6 GSOS Controller Assembly Front View

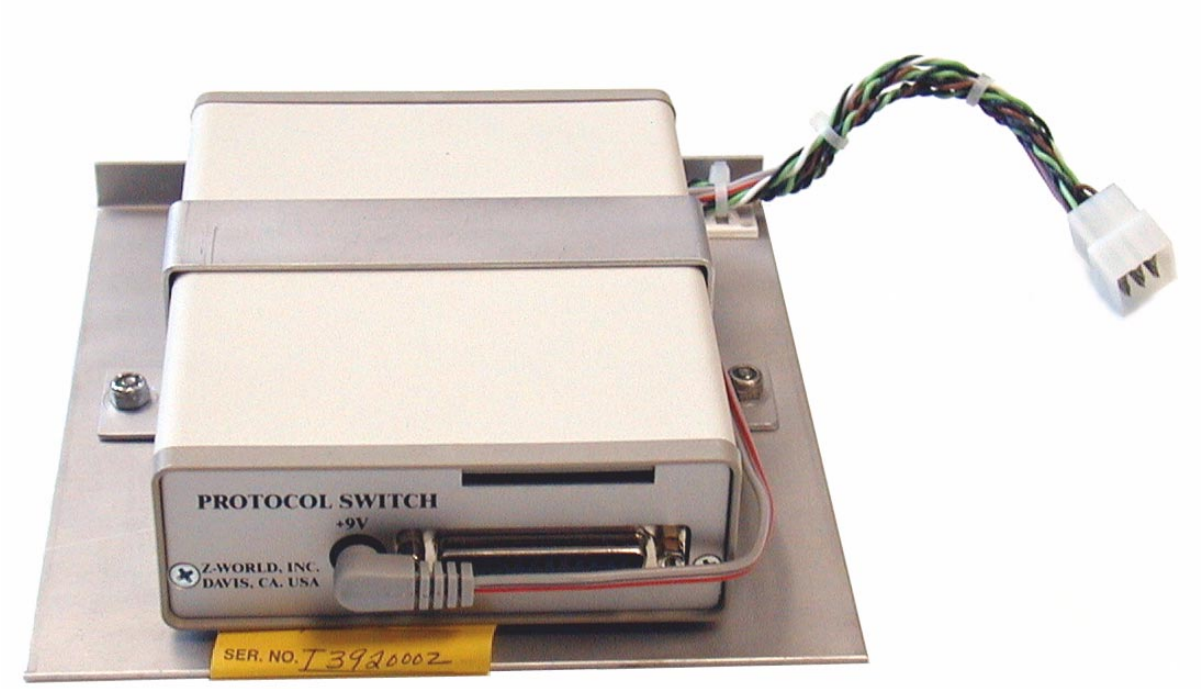

Figure 10-7 GSOS Controller Assembly Rear View

10.1.1.2 Barometric Pressure Sensor-Transmitter Assembly

The pressure sensor is a *Vaisala PTB220 Series Digital Barometer* (see Figure 10-8). This barometer has excellent hysteresis and repeatability characteristics and outstanding temperature and long-term stability. The barometer communicates with the GSOS Controller via RS232 interface. The barometer's key specifications are shown below:

Pressure Range	500 ... 1100 hPa
Temperature Range	-40 ... +60 ^{o}C
Total Accuracy	$\pm$0.25 hPa
Long-term Stability	$\pm$0.1 hPa/year
Supply Voltage	10 ... 30 VDC

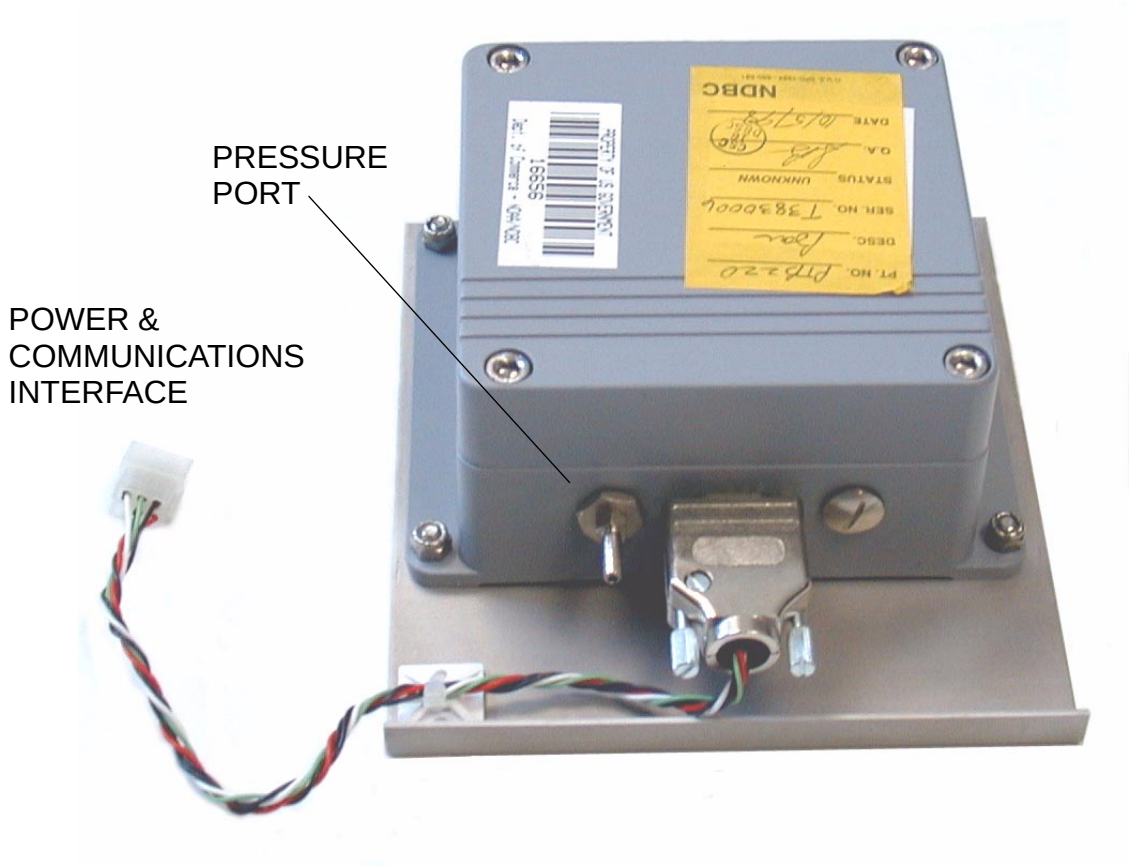

Figure 10-8 Barometric Pressure Sensor-Transmitter Assembly

10.1.1.3 Temperature/Relative Humidity Sensor-Transmitter Assembly

The Temperature/Relative Humidity (T/RH) Sensor is a *Vaisala Model HMP233*. As shown in Figure 10-9, the sensor probe and the transmitter unit are integrated into one assembly. If either the probe or transmitter fails, the entire assembly is replaced. The T/RH assembly communicates with the GSOS Controller via RS485/RS422 interface.

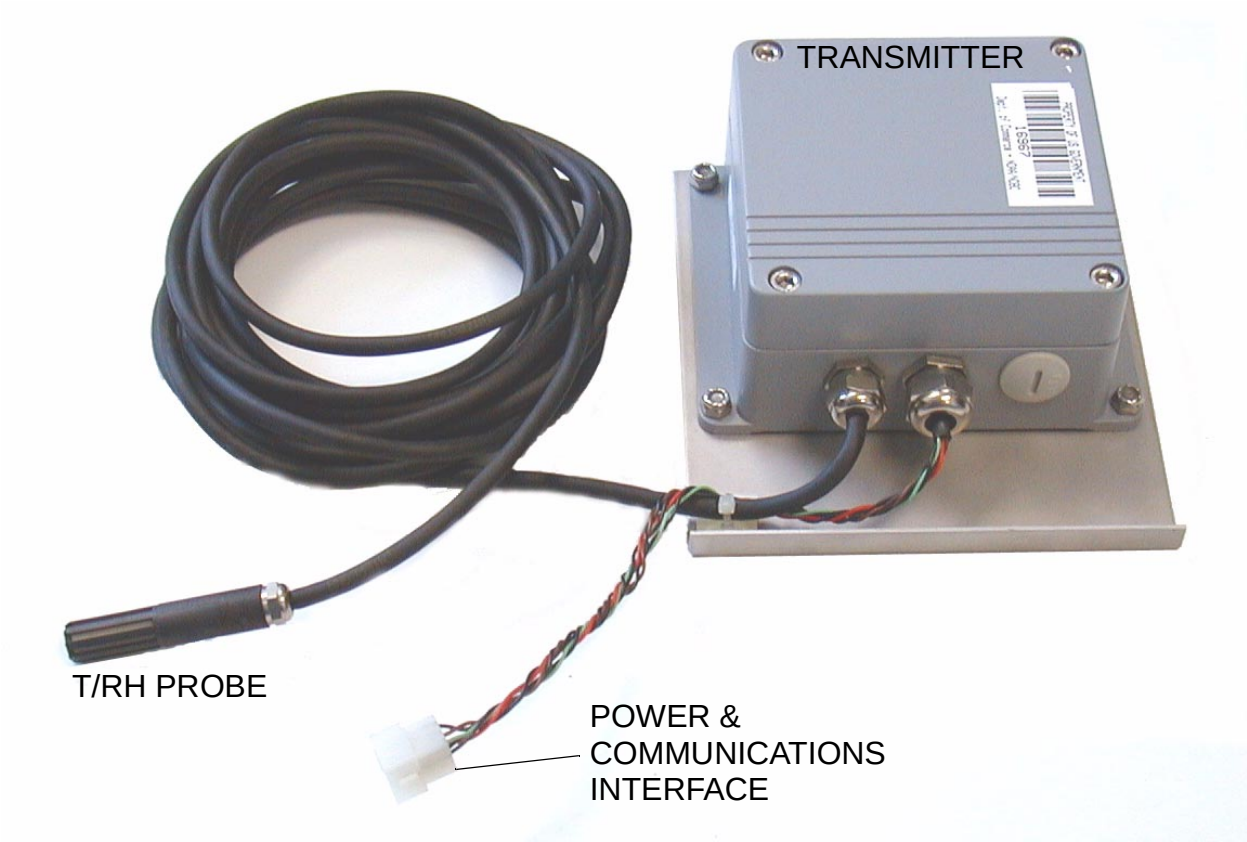

Figure 10-9 T/RH Sensor-Transmitter Assembly

10.1.1.4 Surge Suppressor Assembly

This Surge Suppressor Assembly is an *Amber Industries Model 1148-12* (see Figure 10-10). The suppressor provides two-stage protection for 4-wire communications circuits, dissipating both positive and negative voltage transients. The model 1148-12 specifications are show below:

Operating Voltage:	±12 Vpk
Let-through Voltage:	±24v (l-g)
Series Resistance:	10 Ohms
Max. Transient Voltage:	10 KV (8 x 20 microseconds)
Mix. Transient Current:	20 KA/line (8 x 20 microseconds)
Response Time:	less than 5 microseconds

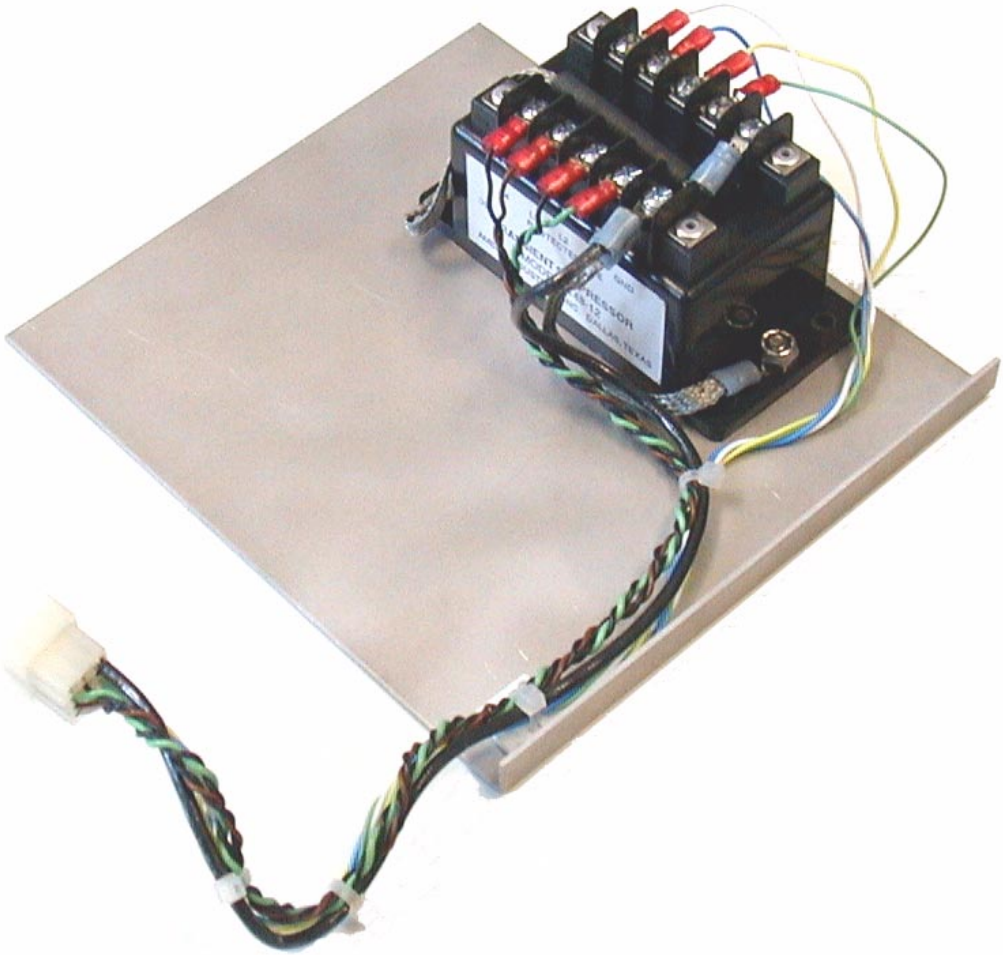

Figure 10-10 Surge Suppressor Assembly

10.1.2 Mounting Assembly and Fold-Down Arm

The GSOS Mounting Assembly attaches to one of the fence posts surrounding the profiler antenna compound (see Figure 10-11). The fold-down arm is hollow and serves as conduit to route the barometric pressure hose and T/RH sensor cable to the top of arm. The Fold-down arm is held in the vertical position by a Cotter Pin.

At the top of the fold-down arm, a radiation shield surrounds the T/RH sensor probe to protect it from the elements (see Figure 10-12). The metallic disk below the radiation shield is the barometric pressure port opening.

The gray PVC tube shown in Figure 10-12 provides the mounting mechanism for the T/RH probe. The PVC tube can be removed from the aluminum cube by loosening the thumb screw and pulling the PVC tube out from the bottom.

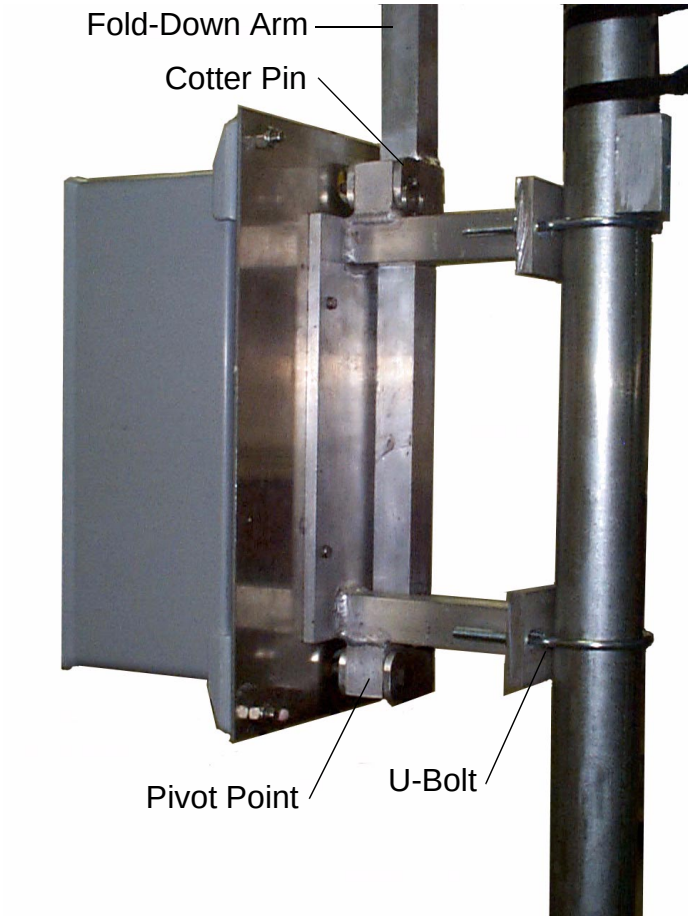

Figure 10-11 GSOS Mounting Assembly and Fold-Down Arm

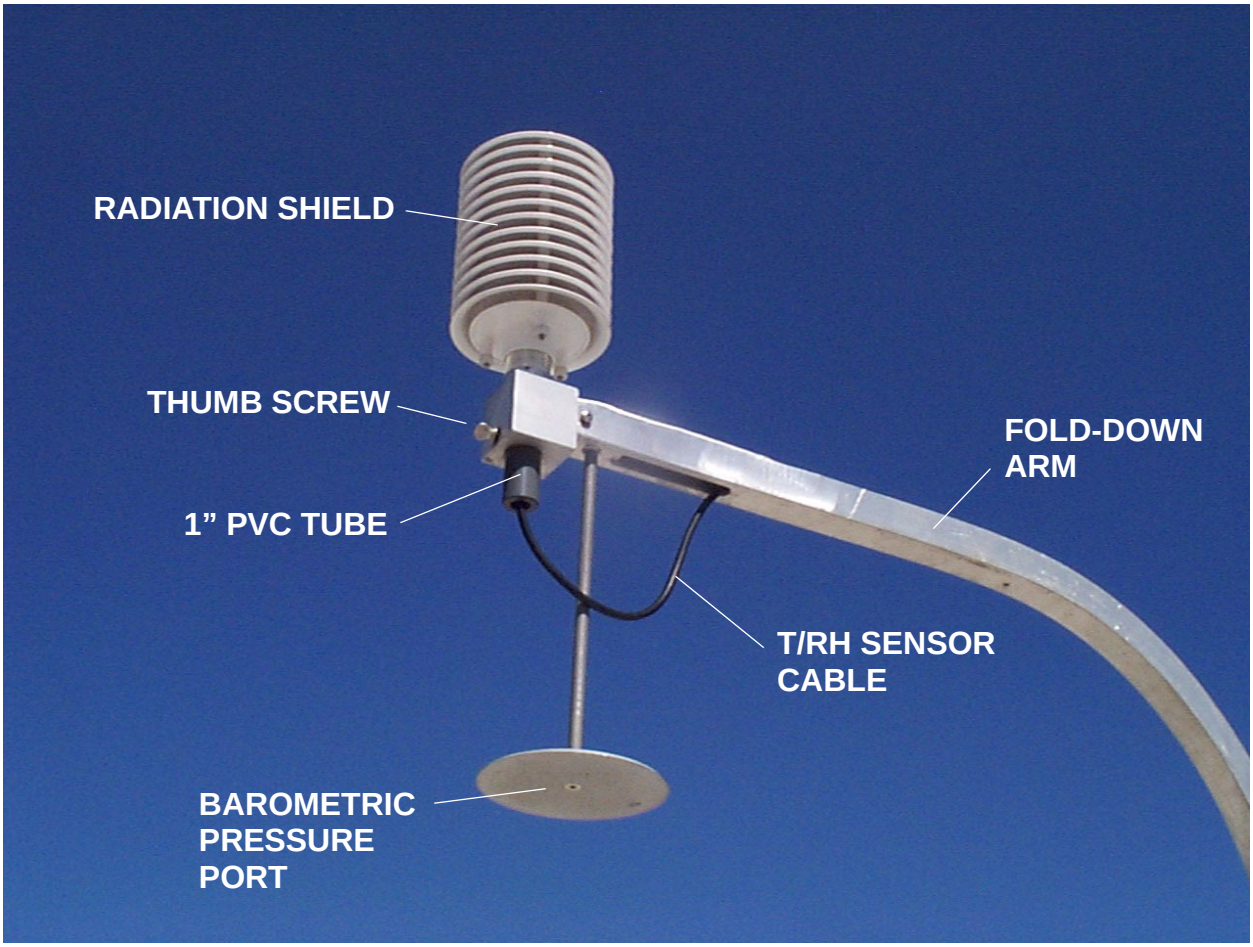

Figure 10-12 GSOS Fold-Down Arm Assembly

10.1.3 Power Supply and Communications Interface Assembly

The Power Supply and Communications Interface (PSCI) Assembly consists of a +24 VDC Power Supply Module, an RS422 to RS232 Converter, and a 4-wire communications line surge suppressor (see Figure 10-13). The power and communications interface cable's quick-disconnect connector provides a convenient method to power cycle the payload from inside the shelter, and simplifies replacement of the PSCI assembly. A wiring schematic for the PSCI is shown in Figure 10-14.

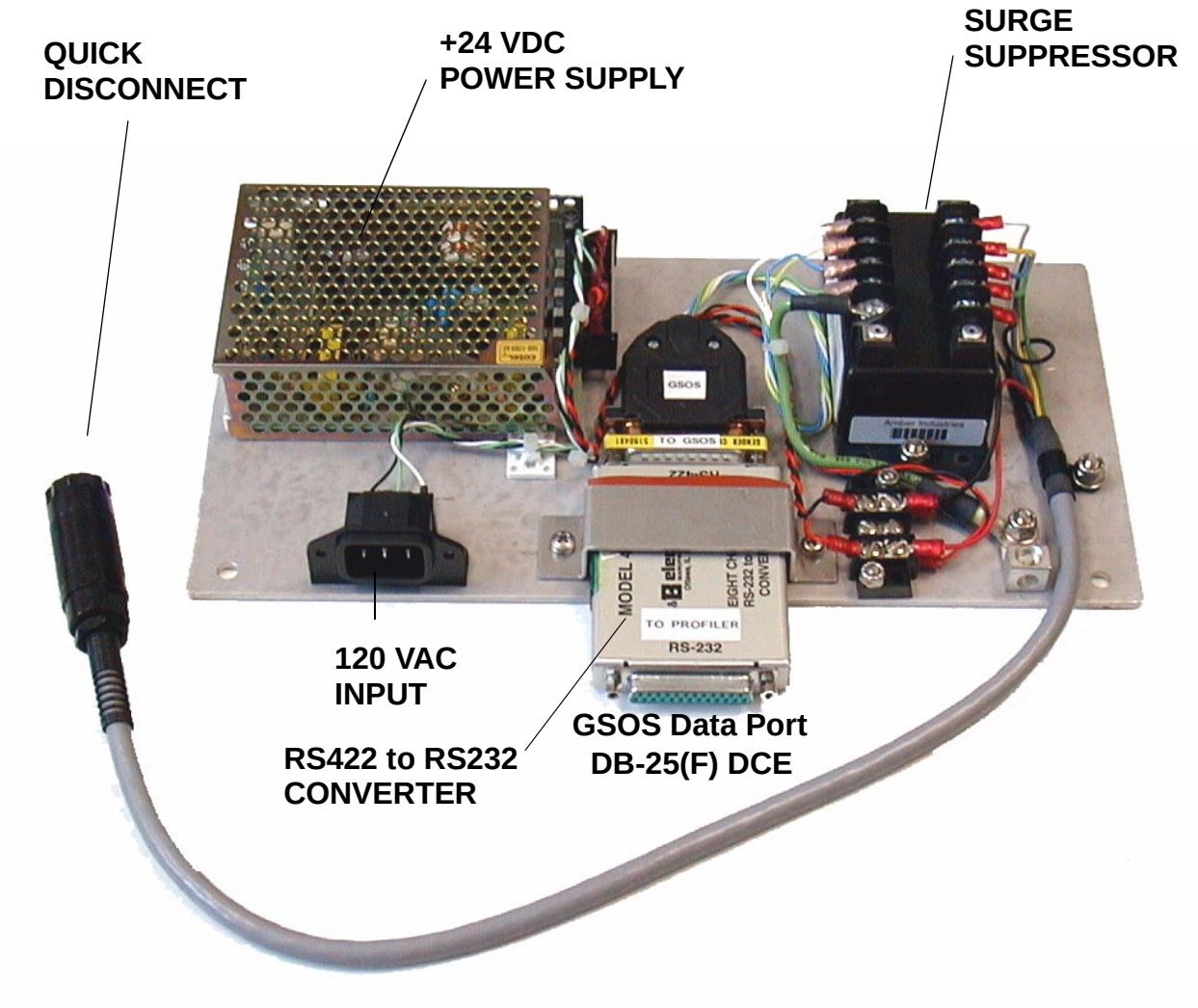

Figure 10-13 GSOS Power Supply and Communications Interface Assembly

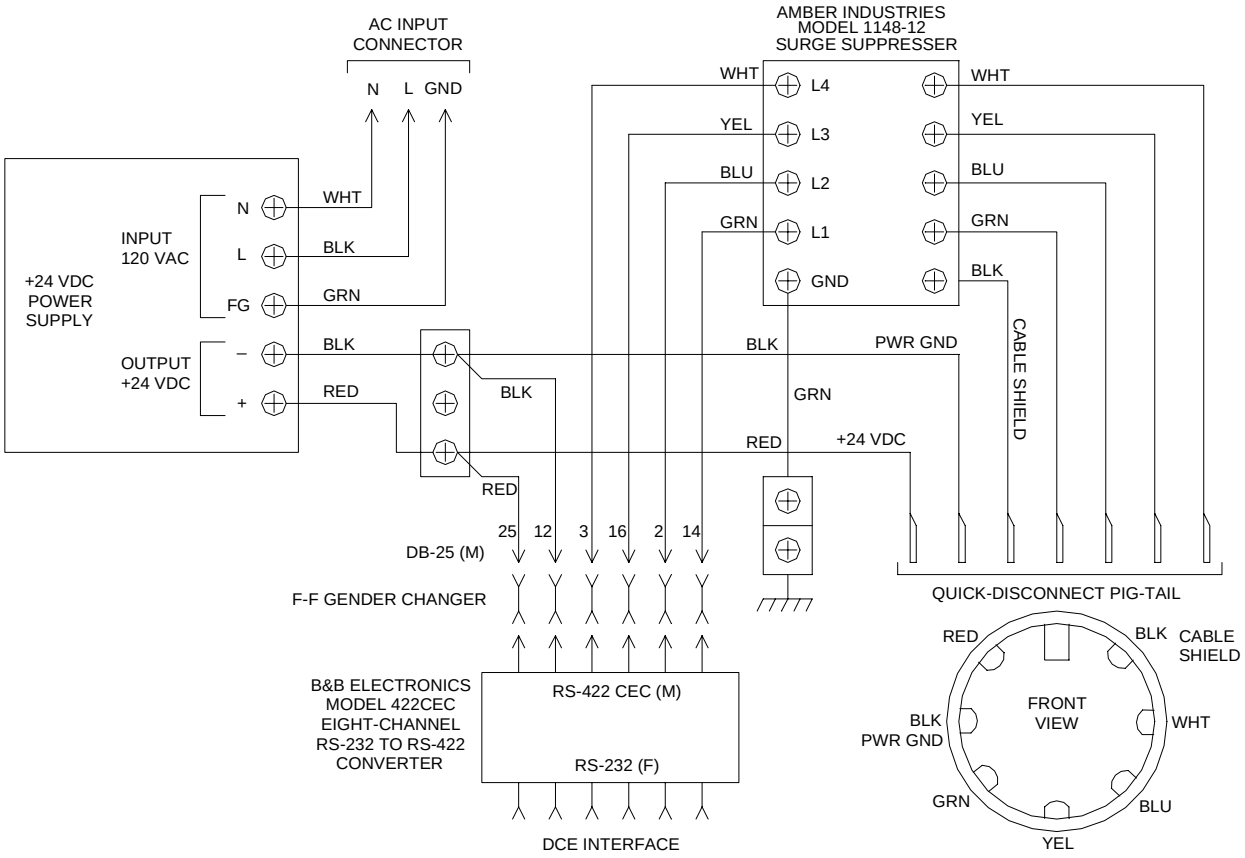

Figure 10-14 GSOS Power & Communications Interface Schematic Diagram

10.2 Operations

When power is first applied to the GSOS payload, the controller begins its boot-sequence. During this time, the *L1* and *L2* LED indicators on the contoller's front panel blink, alternating between *L1* and *L2* (about 1-2 times per second). This rapid blink cycle continues until the controller's internal real-time clock reaches a 5-minute boundary (hh:05, hh:10, hh:15 ..... hh:00). Once a 5-minute boundary is reached, the controller enters its normal 5-minute data logging cycle. While the controller is logging data, the *L1* or *L2* LED indicator on the contoller front panel illuminate alternating at each 5-minute boundary. If the controller does not exhibit this behavior, it is most likely damaged.

The controller takes several reading during the 5-minute sample period and calculates the average at the end of the cycle. The averaged reading are stored in a circular-buffer in memory. The buffer can store about 7-days of data before the buffer fills and begins over-writing the oldest data. Power-cycling (or power outage) the GSOS controller will cause all data stored in the circular-buffer to be lost.

GSOS barometer measures *station* pressure and controller calculates *sea-level* pressure. The algorithm requires current *station* barometric pressure and air temperature readings and an air temperature reading from 12 hours earlier to derive a *sea-level* pressure reading. Once power is applied to the GSOS payload (or if the GSOS is power-cycled or loses power) it takes 12 hours of continuous operation before *sea-level* pressure readings will be available.

GSOS is a polled-system, meaning it does not transmit any data unless it receives a request from a host computer. The GSOS controller responds to ACSII character commands. The commands are used to configure site specific parameters and request data. The command syntax covered in the Section 10.2.3.

GSOS has two communications ports P1 (GSOS Setup Port) and P3 (GSOS Data Port). Both ports provide similar functionality, with the following exceptions:

- P1 is configured for RS-232 communications.
- P2 is configured for RS485/RS422 communications.
- A computer terminal connected to port P1 allows a user to change the serial port settings for port P3. P3 does not respond to the *PORT* command
- P1 does not respond to data request commands such as *L*, *G*, *CURRENT*, *AVG*, *HOUR*, or *DAY*.

10.2.1 GSOS Setup Port

The GSOS Setup Port (P1 on the controller front panel, see Figure 10-6) is an RS232 port primarily used to configure the GSOS with site specific parameters using the command syntax described in the Section 10.2.3. A special interface cable is required to use this port, the cable's wiring diagram is shown in Figure 10-15. The serial communications parameter setting for port P1 are fixed at the following values:

Baud Rate:	9600
Data Bits:	8
Stop Bits:	1
Parity:	No
Flow Control:	None

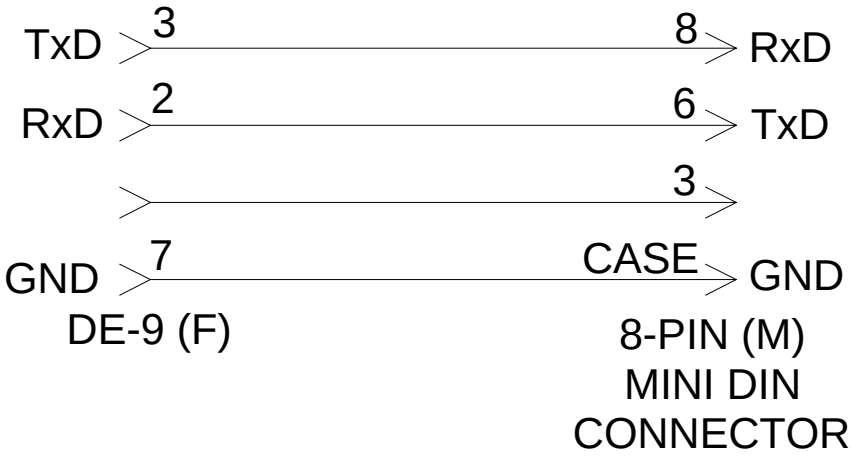

Figure 10-15 GSOS Setup Port (P1) Interface Cable Specifications

10.2.2 GSOS Data Port

The GSOS Data Port (P3 on the controller front panel) is an RS-485/RS422 port that interfaces with the host computer through the Power Supply & Communications Interface Assembly (see Figure 10-13). At NOAA Profiler sites, the host computer is the Data Processor Assembly. The Data Processor has an RS-232 port (C1) that is used to interface with auxiliary devices such as GSOS. The cable required to connect the GSOS Power & Communications Interface to the Data Processor (Port C1) is a straight-through DB25P (Male) to DB25S (Female) about 6-FT in length.

The Data Processor polls the GSOS every 6 minutes during the vertical low mode by sending the GSOS an ASCII “L” character. When GSOS receives a poll-character, it transmits a 64-byte string containing the latest 5-minute data samples.

10.2.2.1 Configuring the Data Processor to interface with GSOS

Several of the Data Processor’s setup parameters must be configured to accept GSOS data. The Profiler Maintenance Terminal (PMT) provides the means to modify these parameters.

1. Connect the PMT interface cable to the DB25 connector on the front panel of the Status Monitor. Start the PMT program on the notebook computer and login to the wind profiler system.

2. Using the Profiler Maintenance Terminal (PMT), place the profiler into *Maintenance Mode*.

3. Select *System Parameters* for the PMT *Main Menu* options.

4. Select *Communications* from the *System Parameters Menu*. The following screen is displayed on the PMT (see Figure 10-16). Use the arrow keys to move cursor to the desired field. Press the *F5* key to select the field. Modify the field as required, and commit the change to the field by pressing the *F6* key.

```
3 WPS-234, PASSWORD REQUIRED                        Maintenance
4 This could take 6 minutes
5 COMMAND EXECUTED
                   Communications Parameters Menu

 Communication Method          BOTH            Landline, Goes, Both

 Goes Id                       750126DA        00000000-FFFFFFFE Hex
 Channel Number                 93             001-199 Decimal
 Transmission Minute            7              00..59
 Transmit Frequency            1               1..6
 Preamble Length               S               S[hort] or L[ong]
 Vertical Parity               Y               Yes or No

 Landline Parameters
 Landline Baud Rate            1200            0300,1200,2400,4800,9600
 x/ON x/OFF Enable             N               Yes or No
 Radiometer Data Inc.          Y               Yes or No
 Radiometer Data Block Length  064             002 to 512 - Even number

 Radiometer Baud Rate          1200            0300,1200,2400,4800,9600



1 Prev  2       3       4       5 select 6Enter  7     8     9      0
```

Figure 10-16 PMT Communications Parameters Menu

5. Set ***Radiometer Data Inc.*** to *Y*. This informs to Data Processor that a GSOS unit is connected to port C1, and to poll the GSOS every 6-minutes.

6. Set ***Radiometer Data Block Length*** = *064*. This tells the Data Processor how many bytes of data to expect to be received from the GSOS.

7. Set ***Radiometer Baud Rate*** = *1200*. The baud rate must match the GSOS Data Port baud rate.

8. Return the profiler to *Operational* Mode.

10.2.2.2 Verifying the Data Processor is receiving data from GSOS

If the Data Processor parameters are configured to expect Radiometer Data (GSOS), the Data Processor will transmit as ASCII “L” character to the GSOS during the vertical low mode of the radar’s 6-minute cycle. If the GSOS fails to send a response back to the Data Processor, an *AUXILIARY DEVICE* fault is generated and placed in the radar’s Failure Data Log (the Failure Data Log is viewed using the PMT).

The data received from GSOS can be viewed using the PMT Radiometer Data Display. Select *Display Current Output* from the PMT *Main Menu*, select *Landline*, then *Radiometer Data*. A display similar to Figure 10-17 will appear on the PMT screen. The 64-byte ASCII string received from the GSOS is displayed as 1-byte hexadecimal values, refer to Table 10-1 for a Hexadecimal to ASCII Conversion Chart. If all 64 bytes are “00” then no data was received from the GSOS.

```
3 WPS-234, PASSWORD REQUIRED                        Operational
4 This could take 6 minutes
5 COMMAND EXECUTED
                           Radiometer Data

 Mode: 03  Submode: 01            Length 0192      Checksum: 5A6E

                            Radiometer Data

    001..010   01 02 03 04 05 06 07 08 09 0A
    011..020   0B 0C 00 01 02 03 04 05 06 07
    021..030   08 09 0A 0B 0C 00 01 02 03 04
    031..040   05 06 OA 0A 0A 0B 0C 0D 0E 0F
    041..050   05 06 OA 0A 0A 0B 0C 0D 0E 0F
    051..060   05 06 OA 0A 0A 0B 0C 0D 0E 0F
    061..064   05 06 OA 0A

                                                          Prev    Next
1 Prev  2       3       4       5        6       7     8     9Screen 0Screen
```

Figure 10-17 PMT - Landline Output - Radiometer Data

Table 10-1 Hexadecimal to ASCII Conversion Chart

Dec	Hex	Char	Dec	Hex	Char	Dec	Hex	Char	Dec	Hex	Char
0	00	Null	32	20	Space	64	40	@	96	60	‘
1	01	Start of heading	33	21	!	65	41	A	97	61	a
2	02	Start of text	34	22	“	66	42	B	98	62	b
3	03	End of text	35	23	#	67	43	C	99	63	c
4	04	End of transmit	36	24	$	68	44	D	100	64	d
5	05	Enquiry	37	25	%	69	45	E	101	65	e
6	06	Acknowledge	38	26	&	70	46	F	102	66	f
7	07	Audible bell	39	27	‘	71	47	G	103	67	g
8	08	Backspace	40	28	(	72	48	H	104	68	h
9	09	Horizontal tab	41	29	)	73	49	I	105	69	i
10	0A	Line feed	42	2A	*	74	4A	J	106	6A	j
11	0B	Vertical tab	43	2B	+	75	4B	K	107	6B	k
12	0C	Form feed	44	2C	,	76	4C	L	108	6C	l
13	0D	Carriage return	45	2D	-	77	4D	M	109	6D	m
14	0E	Shift out	46	2E	.	78	4E	N	110	6E	n
15	0F	Shift in	47	2F	/	79	4F	O	111	6F	o
16	10	Data link Escape	48	30	0	80	50	P	112	70	p
17	11	Device Control 1	49	31	1	81	51	Q	113	71	q
18	12	Device Control 2	50	32	2	82	52	R	114	72	r
19	13	Device Control 3	51	33	3	83	53	S	115	73	s
20	14	Device Control 4	52	34	4	84	54	T	116	74	t
21	15	Neg. acknowledge	53	35	5	85	55	U	117	75	u
22	16	Synchronous idle	54	36	6	86	56	V	118	76	v
23	17	End trans. ack	55	37	7	87	57	W	119	77	w
24	19	Cancel	56	38	8	88	58	X	120	78	x
25	19	End of medium	57	39	9	89	59	Y	121	79	y
26	1A	Substitution	58	3A	:	90	5A	Z	121	7A	z
27	1B	Escape	59	3B	;	91	5B	[	123	7B	{
28	1C	File separator	60	3C	<	92	5C	\	124	7C	|
29	1D	Group separator	61	3D	=	93	5D	]	125	7D	}
30	1E	Record separator	62	3E	>	94	5E	^	126	7E	~
31	1F	Unit separator	63	3F	?	95	5F	_	127	7F	

10.2.3 GSOS Command Syntax

GSOS commands are one-or-more ASCII characters, terminated by a carriage return <CR>. The commands are not case sensitive, any upper case characters received by the GSOS are converted to lower case. The GSOS commands are divided into two groups, configuration commands and data query commands.

10.2.3.1 GSOS Command Prompt

The GSOS command prompt is a greater-than character (>). If a terminal is used to interface with GSOS controller, press carriage return <CR> several times until the command prompt “>” is displayed on the terminal screen.

10.2.3.2 Query Commands

?<CR> or STATUS<CR>

The status commands (? or status) display the current GSOS status, configuration parameters, and help display. Both the Setup Port (P1) and Data Port (P3) respond to the *STATUS* command. However, the responses to the *STATUS* command are slightly different depending on which port is used.

Figure 10-18 is an example response to a *STATUS* command when a terminal is connected to the GSOS Setup Port (P1). Note the command help menu does not include options to query data, this is because the Setup Port does not respond to query commands. The last six 5-minute averaged readings are automatically appended at the end of the *STATUS* message response. If the GSOS controller is reset or power-cycled within 30-minutes of the status command, the number of data sample messages displayed are reduced accordingly.

Figure 10-19 is an example response to a *STATUS* command when a terminal is connected to the GSOS Data Port (P3) through the GSOS Power and Communications Interface. Note the menu provides limited configuration commands. Although the *STATION* and *COEFF* are not listed as available commands, the GSOS will respond to these *hidden* commands if they are received through the Data Port.

```
>?
Status of GSOS system.          V 2.1d
Station ID                    = SITE
Temp/Humidity Sensor          = OK
Pressure Sensor               = OK
Number Measurements in Buffer = 3
Serial Port settings          = 1200, No Parity, 8 Data, 1 Stop
Current Date and Time         =  5 16 2000 22 10 17
Sea Level Coeff. A = 1.0000E+0 B = 1.0000E+0 C = 1.0000E+0 D = 1.0000E+0

   time     = Allows the user to reset the date/time.
   reset    = Will cause the GSOS computer to do a hardware reset.
                  (Use with caution, will lose stored data.)
   status,? = This command.
   port     = Used to setup data port.
   station  = Used to set the Station ID.
   coeff    = Setup Sea Level Pressure Conversion Coefficients.
 Current Data
test 2000 137 21:40  820.72mb  21.75C  46.27%    0.00mb/SL
test 2000 137 21:45  820.58mb  21.76C  46.04%    0.00mb/SL
test 2000 137 21:50  820.40mb  21.75C  46.12%    0.00mb/SL
>
```

Figure 10-18 GSOS Setup Port (P1) Status Display and Help Menu

```
Status of GSOS system.          V 2.1d
Station ID                    = PATB

Temp/Humidity Sensor          = OK
Pressure Sensor               = OK
Number Measurements in Buffer = 0
Serial Port settings          = 1200, No Parity, 8 Data, 1 Stop
Current Date and Time         =  5  3 2000 23  6  1

Sea Level Press Coefficients A = 3.3863E-1  B = 1.0000E+0
                             C = 1.7632E-38  D = 1.7632E-38

   l,current,g = Displays the last 5 minute average stored.
   day[1,2,3,4,5,6] = Displays data for each day, 'day' most current data.
   avg      = Displays the last 30 minutes of data stored.
   hour     = Displays the last hour & 30 minutes of data stored.
   clock    = Displays the current clock date/time setting.
   time     = Allows the user to reset the date/time.
   time MM/DD/YYYY HH:MM:SS = Allows resetting date/time.(No prompting)
   reset    = Will cause the GSOS computer to do a hardware reset.
                  (Use with caution, will lose stored data.)
   status,? = This command.
>
```

Figure 10-19 GSOS Data Port (P3) Status Display and Help Menu

L or G

These commands simulate the request generated every 6-minutes (in vertical low mode) by a wind profiler system. The L is for Landline (latest 6-minute), and G is for GOES (latest hourly average). The GSOS responds with a 64-byte message conforming to the following format:

```
>lEKY1 2000  18  0: 0  914.00mb  31.00C  76.20% 1002.00mb/SL<cr><lf><cr><lf><lf>
 lssss yyyy jjj hh:mm pppp.pp   ±tt.tt  hhh.hh  PPPP.PP
 1234567890123456789012345678901234567890123456789012345678 9
          1         2         3         4         5          60  61  62  63  64

where: L,l,G,g = poll command character echoed by the GSOS when received.
          ssss = site name or ID.
          yyyy = Year Timestamp (based on GSOS controller Real-Time Clock).
           jjj = Julian Date Timestamp (based on GSOS controller Real-Time Clock).
            hh = Hour Timestamp (based on GSOS controller Real-Time Clock).
            mm = Minute Timestamp (based on GSOS controller Real-Time Clock).
       pppp.pp = station barometric pressure in millibar.
        ±tt.tt = Air Temperature in degrees Celsius.
        hhh.hh = Relative Humidity from 0 - 100%
       PPPP.PP = Sea-Level (derived) Barometric Pressure in millibar.
          <cr> = ASCII Carriage Return character.
          <lf> = ASCII Line-Feed character.
```

CURRENT<CR>

Same as L or G, except the poll character (L,l,G,or g) are not echoed in the response.

AVG<CR>

The *AVG* command causes GSOS to transmit the six most-recent 5-minute data samples as shown in the example below:

```
>avg<CR>
WLCI 2000 123 18:10  995.36mb  19.68C  53.98% 1020.78mb/SL
WLCI 2000 123 18:15  995.42mb  19.86C  52.74% 1020.84mb/SL
WLCI 2000 123 18:20  995.40mb  19.83C  51.79% 1020.82mb/SL
WLCI 2000 123 18:25  995.36mb  20.07C  50.37% 1020.78mb/SL
WLCI 2000 123 18:30  995.45mb  20.27C  50.87% 1020.86mb/SL
WLCI 2000 123 18:35  995.48mb  20.27C  48.84% 1020.90mb/SL
```

HOUR<CR>

The *HOUR* command causes GSOS to transmit the last several hours of 5-minute data samples as shown in the example below:

```
>hour<CR>
WLCI 2000 123 17:10  995.43mb  18.82C  60.07% 1020.85mb/SL
WLCI 2000 123 17:15  995.46mb  18.84C  55.69% 1020.88mb/SL
WLCI 2000 123 17:20  995.48mb  19.19C  57.64% 1020.90mb/SL
WLCI 2000 123 17:30  995.45mb  19.11C  55.46% 1020.87mb/SL
  .
  .
  .
WLCI 2000 123 18: 5  995.32mb  19.87C  55.57% 1020.73mb/SL
WLCI 2000 123 18:10  995.36mb  19.68C  53.98% 1020.78mb/SL
WLCI 2000 123 18:15  995.42mb  19.86C  52.74% 1020.84mb/SL
WLCI 2000 123 18:20  995.40mb  19.83C  51.79% 1020.82mb/SL
WLCI 2000 123 18:25  995.36mb  20.07C  50.37% 1020.78mb/SL
WLCI 2000 123 18:30  995.45mb  20.27C  50.87% 1020.86mb/SL
WLCI 2000 123 18:35  995.48mb  20.27C  48.84% 1020.90mb/SL
```

10.2.3.3 Configuration Commands

STATION<CR>

Changes the name of the Station ID stored in the GSOS. The following prompt is displayed:

```
Enter Station ID (4 char)
>
```

COEFF<CR>

Changes of values of four coefficients (A,B,C,and D) stored in the GSOS used to calculate Sea-Level Pressure. Coefficient values are different for every site location. GSOS prompts individually for each of the coefficient values as show below:

```
Coefficient A
>0.0000234
Coefficient B
>0.0000045
Coefficient C
>1
Coefficient D
>0
>
```

Number less than zero should be entered with a leading zero (0.0...). Numbers equal to 1 or 0 should be entered as integer values.

TIME<CR>

Used to interactively set the GSOS internal Real-Time Clock. A continuously updating time is shown, the user can then choose to update the clock by selecting Y (yes) or keep the existing time by selecting N (no). If Yes is selected, the following prompt is displayed:

```
Please Initialize Time

MM DD YYYY HH MM SS
_
```

Enter values with leading zeros (if less than 10) and separate with spaces. Press Enter <CR> to commit values.

TIME mm/dd/yyy hh:mm:ss<CR>

Used to non-interactively set the GSOS internal Real-Time Clock. After the new date/ time values have been entered, by GSOS displays the following message.

```
Sampling Time Reset
Please Wait
.....................
>
```

The GSOS prints a succession of dots, until the internal clock reaches the next 5-minute boundary, at which point the command prompt (>) is displayed. You must wait until the command prompt is displayed before attempting to enter any commands.

PORT<CR>

Changes the serial communications parameters for port P3 (GSOS Data Port). The *PORT* command can only be executed when connected to the Setup Port (P1). The following prompts are displayed: (Select values by entering the number on left)

```
Set Output Port Baud Rate
1 = 1200
2 = 2400
3 = 4800
4 = 9600
5 = 19200
>
```

```
  Set Output Port Stop Bits
  1 = 1 Stop Bit
  2 = 2 Stop Bit

  >

  Set Output Port Data Bits
  1 = 7
  2 = 8

  >

  Set Output Port Parity
  1 = No Parity
  2 = Even Parity
  3 = Odd Parity

  >

Use the RESET command to make communication setting take affect.

>
```

RESET<CR>

The RESET command resets the controller's CPU, having the same effect as power-cycling the GSOS. All stored measurements stored in memory are lost. During the boot-up process the following message is displayed:

```
  Power UP.
  ....................................
  GSOS Version 2.1d

  >
```

GSOS prints a succession of dots until its internal clock reaches a 5-minute boundary. GSOS then enters its normal 5-minute data logging cycle and prints the controller's firmware version and command prompt (>) on the screen.

10.3 Replacement Procedures

The following tools are required to and replace GSOS components:

- #2 Phillips Head Screwdriver
- #2 Flat Blade Screwdriver
- Small Flat Blade Screwdriver
- 1/16” Allen Head Wrench
- 3/4” Adjustable Wrench (Crescent Wrench) or
- 3/4”, 5/8”, 9/16”,1/2”, and 5/16” Open-end Wrenches
- Diagonal Cutters/Utility Knife

10.3.1 Payload Replacement

1. Disconnect the Power & Communications Interface Cable from the bottom of the GSOS Payload enclosure (see Figure 10-20).

2. Unscrew the four captive fasteners on the enclosure door and open enclosure. The door is hinged on the left side of the enclosure (see Figure 10-20).

3. Disconnect the barometric pressure hose from bulk-head fitting on the bottom of the GSOS Payload enclosure (see Figure 10-20).

4. Disconnect the ground wires from the bottom the GSOS enclosure (see Figure 10-20).

5. Remove the cotter pin from the fold-down arm and lower the arm counter-clockwise (see Figure 10-21).

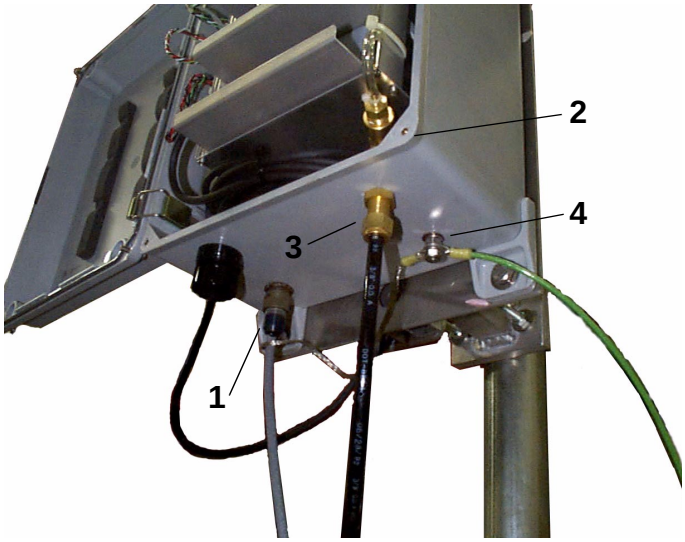

Figure 10-20 Payload Interfaces

Figure 10-21 Lower Fold-Down Arm

6. Loosen the thumb screw at the top of the arm and remove the sensor mounting assembly (1" gray PVC tube) from the arm (see Figure 10-22).

7. Unscrew the allen-head setscrew holding the T/RH Probe inside the PVC tube and remove the probe from the tube.

8. At the base of the fold-down arm, pull the T/RH cable out of the arm, while feeding the probe through the slot at the top on the arm.

9. Unscrew the compression nut from the stuffing tube where the T/RH cable enters the GSOS enclosure (see Figure 10-23).

10. Feed in the T/RH cable into the GSOS enclosure through the stuffing tube and coil the sensor cable inside the enclosure below the card cage.

11. Re-assemble and tighten the T/RH cable stuffing tube.

12. Close and fasten the door in the GSOS enclosure.

13. Remove the four mounting screws fastening the GSOS enclosure to the mounting assembly and remove the enclosure from the mounting assembly.

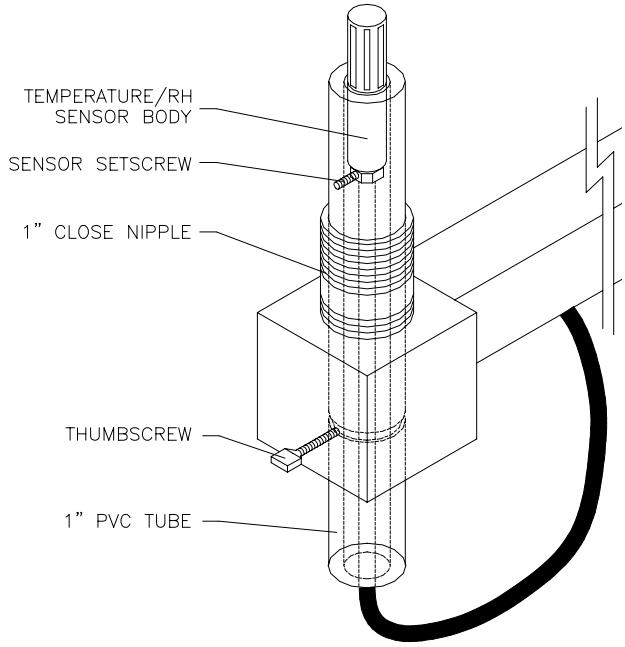

Figure 10-22 T/RH Sensor Removal

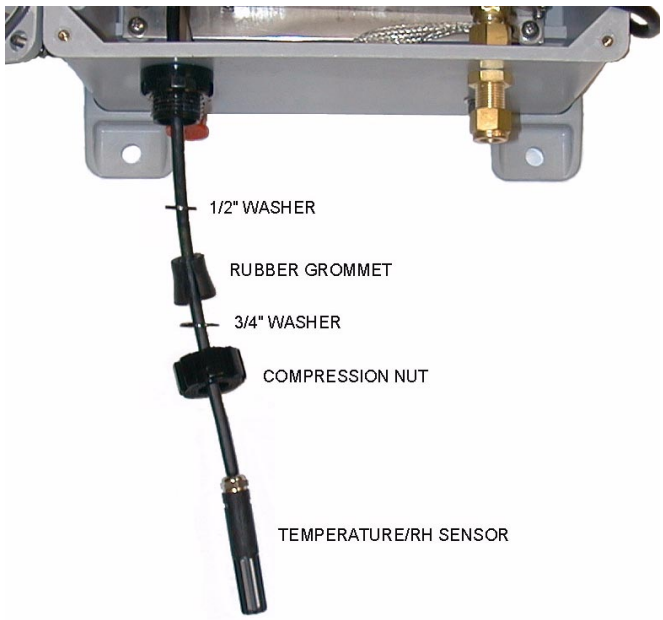

Figure 10-23 Payload Stuffing Tube

14. Mount the replacement GSOS enclosure to the mounting assembly and secure the four fasteners.

15. Open the GSOS enclosure and un-coil the T/RH Cable. Straighten the cable and remove any kinks.

16. Feed the T/RH sensor though the stuffing tube (and its washers and grommet) as shown in Figure 10-23. The T/RH probe body is too large to fit through the stuffing tube washers and grommet. Make diagonal cuts in the washers and grommet with diagonal cutters or a utility knife.

17. Feed the pull-cord (provided with the payload) from the slot at the top of fold-down arm, though the arm towards the base.

18. Remove the yellow protective cover from the T/RH sensor and attach the pull-cord to the T/RH sensor with electrical tape.

19. Feed the T/RH Sensor through the fold-down arm with your right hand, while pulling the pull-cord with your left hand. Pull enough cable through the arm to form an adequate drip-loop in the sensor cable.

20. Position the T/RH probe inside the mounting assembly such that the metallic base of the probe body aligns with the sensor setscrew (a port hole drilled in the PVC tube opposite the setscrew provides the means to visually align the probe in the PVC tube). Tighten the setscrew to secure the sensor.

21. Insert the PVC tube into the aluminum housing until the scribe line on the PVC tube is flush with the aluminum housing. (This ensures the thumb screw will properly seat in the groove milled in the PVC tube.) Tighten the thumb screw to secure the PVC tube in position.

22. Gather the excess T/RH sensor cable and coil it in the bottom of the GSOS enclosure.

23. Rise the Fold-Down arm and install the cotter pin to secure the arm in the vertical position.

24. Adjust the length of the T/RH sensor cable to allow the Fold-Down Arm to be lowered or raised without stressing the T/RH cable. Tighten the stuffing tube compression nut.

25. Connect the barometric pressure hose and ground wires to the GSOS enclosure as shown in Figure 10-20.

26. Connect the Power & Communications cable to the GSOS enclosure interface connector.

27. Refer to “Operations” in Section 10.2 to verify proper operation of the GSOS controller.

28. Secure the cover on the GSOS enclosure. **DO NOT OVER-TIGHTEN THE SCREWS OR THE CORNERS OF THE ENCLOSURE DOOR WILL CRACK!**

10.3.2 Controller Replacement

1. Disconnect the Power & Communications Interface Cable from the bottom of the GSOS Payload enclosure.

2. Unscrew the four captive fasteners on the enclosure door. The door is hinged on the left side of the enclosure.

3. Unplug the controller’s 15-pin *Molex* connector from the panel to the left of the card cage.

4. Slide the controller assembly from the card cage.

5. Slide the replacement controller into the card cage.

6. Connect the controller’s 15-pin Molex connector to panel to the left of the card cage.

7. Connect the Power & Communications Interface Cable on the bottom of the enclosure.

8. Refer to “Operations” in Section 10.2 to verify proper operation of the GSOS controller.

9. Close and enclosure door and fasten the four captive screws. **DO NOT OVER-TIGHTEN THE SCREWS OR THE CORNER OF THE ENCLOSURE DOOR WILL CRACK!**

10.3.3 Barometric Pressure Sensor Replacement

1. Disconnect the Power & Communications Interface Cable from the bottom of the GSOS Payload enclosure.

2. Unscrew the four captive fasteners on the enclosure door. The door is hinged on the left side of the enclosure.

3. Unplug the barometer's 6-pin *Molex* connector from the panel to the left of the card cage.

4. Cut the nylon cable tie securing the pressure hose at the barometer input port. Disconnect the hose from the barbed fitting.

5. Slide the barometer assembly from the card cage.

6. Slide the replacement barometer assembly into the card cage.

7. Connect the barometer's 6-pin Molex connector to panel to the left of the card cage.

8. Connect the pressure hose to the barbed fitting the barometer. Secure the hose to the fitting with the supplied cable tie.

9. Connect the Power & Communications Interface Cable on the bottom of the enclosure.

10. Refer to "Operations" in Section 10.2 to verify proper operation of the GSOS controller.

11. Close and enclosure door and fasten the four captive screws. **DO NOT OVER-TIGHTEN THE SCREWS OR THE CORNER OF THE ENCLOSURE DOOR WILL CRACK!**

10.3.4 Temperature/RH Sensor Replacement

1. Disconnect the Power & Communications Interface Cable from the bottom of the GSOS Payload enclosure.

2. Unscrew the four captive fasteners on the enclosure door. The door is hinged on the left side of the enclosure.

3. Unplug the T/RH sensors's 9-pin *Molex* connector from the panel to the left of the card cage.

4. Remove the cotter pin from the fold-down arm and lower the arm counter-clockwise (see Figure 10-24).

Figure 10-24 Lower Fold-Down Arm

5. Loosen the thumb screw at the top of the arm and remove the sensor mounting assembly (1" gray PVC tube) from the arm (see Figure 10-25).

6. Unscrew the allen-head setscrew holding the T/RH Probe inside the PVC tube and remove the probe from the tube.

7. At the base of the fold-down arm, pull the T/RH cable out of the arm, while feeding the probe through the slot at the top on the arm.

8. Unscrew the compression nut from the stuffing tube where the T/RH cable enters the GSOS enclosure (see Figure 10-26).

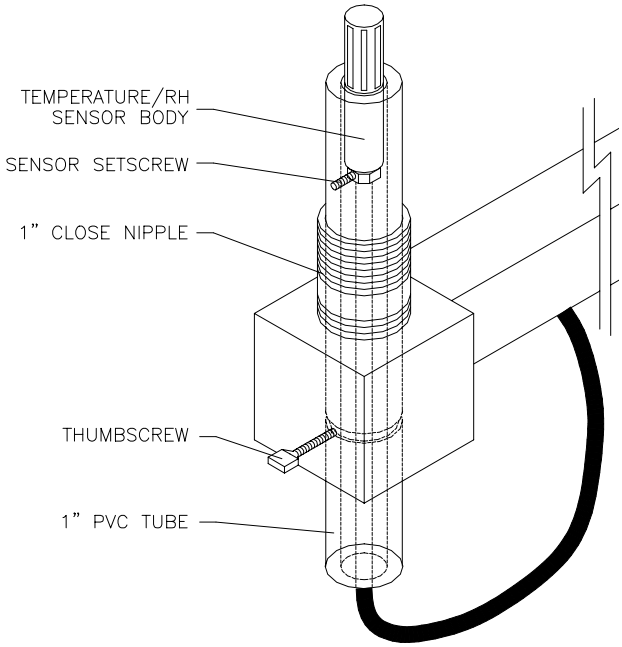

Figure 10-25 T/RH Sensor Removal

9. Feed in the T/RH cable into the GSOS enclosure through the stuffing tube and coil the sensor cable.

10. Slide the T/RH sensor assembly from the card cage.

11. Slide the replacement T/RH sensor assembly into the card cage.

12. Connect the sensor's 9-pin Molex connector to panel to the left of the card cage.

13. Feed the T/RH sensor though the stuffing tube (and its washers and grommet) as shown in Figure 10-26. The T/RH probe body is too large to fit through the stuffing tube washers and grommet. Make diagonal cuts in the washers and grommet with diagonal cutters or a utility knife.

14. Feed the pull-cord (provided with the payload) from the slot at the top of fold-down arm, though the arm towards the base.

15. Remove the yellow protective cover from the T/RH sensor and attach the pull-cord to the T/RH sensor with electrical tape.

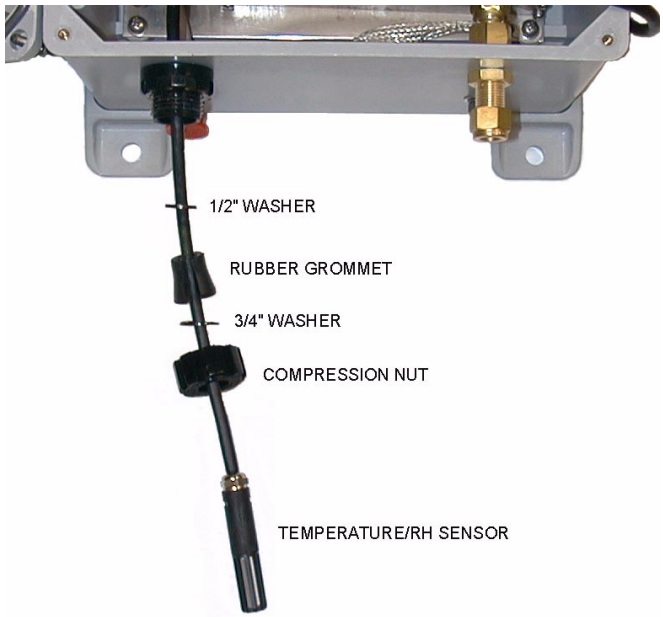

Figure 10-26 Payload Stuffing Tube

16. Feed the T/RH Sensor through the fold-down arm with your right hand, while pulling the pull-cord with your left hand. Pull enough cable through the arm to form an adequate drip-loop in the sensor cable.

17. As shown in Figure 10-25, position the T/RH probe inside the mounting assembly such that the metallic base of the probe body aligns with the sensor setscrew (a port hole drilled in the PVC tube opposite the setscrew provides the means to visually align the probe in the PVC tube). Tighten the setscrew to secure the sensor.

18. Insert the PVC tube into the aluminum housing until the scribe line on the PVC tube is flush with the aluminum housing. (This ensures the thumb screw will properly seat in the groove milled in the PVC tube.) Tighten the thumb screw to secure the PVC tube in position.

19. Gather the excess T/RH sensor cable and coil it in the bottom of the GSOS enclosure.

20. Rise the Fold-Down arm and install the cotter pin to secure the arm in the vertical position.

21. Adjust the length of the T/RH sensor cable to allow the Fold-Down Arm to be lowered or raised without stressing the T/RH cable. Tighten the stuffing tube compression nut.

22. Connect the Power & Communications Interface Cable on the bottom of the enclosure.

23. Refer to “Operations” in Section 10.2 to verify proper operation of the GSOS controller and T/RH sensor.

24. Close and enclosure door and fasten the four captive screws. **DO NOT OVER-TIGHTEN THE SCREWS OR THE CORNER OF THE ENCLOSURE DOOR WILL CRACK!**

THIS PAGE INTENTIONALLY LEFT BLANK

11 GPS-IPW Observing System

The Global Positioning Satellite (GPS) - Integrated Precipitable Water vapor (IPW) Observing System provides a cost effective method to measure total column water vapor in the atmosphere directly above a fixed site. The method uses GPS dual-frequency receivers and surface meteorological sensors to measure excess GPS signal delays caused by water vapor in the atmosphere. By subtracting the effects of the ionosphere, troposphere, and barometric pressure on signal delays, water vapor measurements can be calculated. Each NOAA Profiler Network (NPN) site is equipped with a GPS-IPW and a surface meteorological observing system. This section provides information required to maintain and repair the GPS-IPW equipment located at each profiler site.

11.1 System Description

11.1.1 Electronics Assembly

The GPS-IPW Electronics Assembly consists of a Trimble Receiver, +15 VDC Power Supply, and a 300 VA Uninterruptible Power Supply (UPS) integrated into a 19” rack-mountable tray (see Figure 11-1). Assemblies are fastened to the rack tray using foam rubber pads and nylon straps as shown in Figure 11-2. The rack assembly is mounted in the profiler shelter Equipment Cabinet above the Data Processor Assembly (see Figure 4-1).

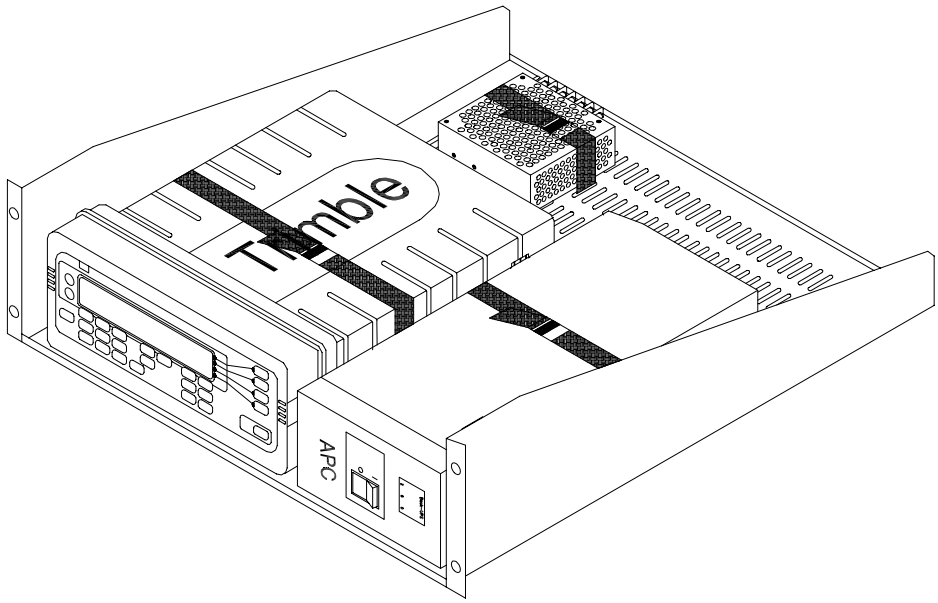

Figure 11-1 GPS Electronics Assembly

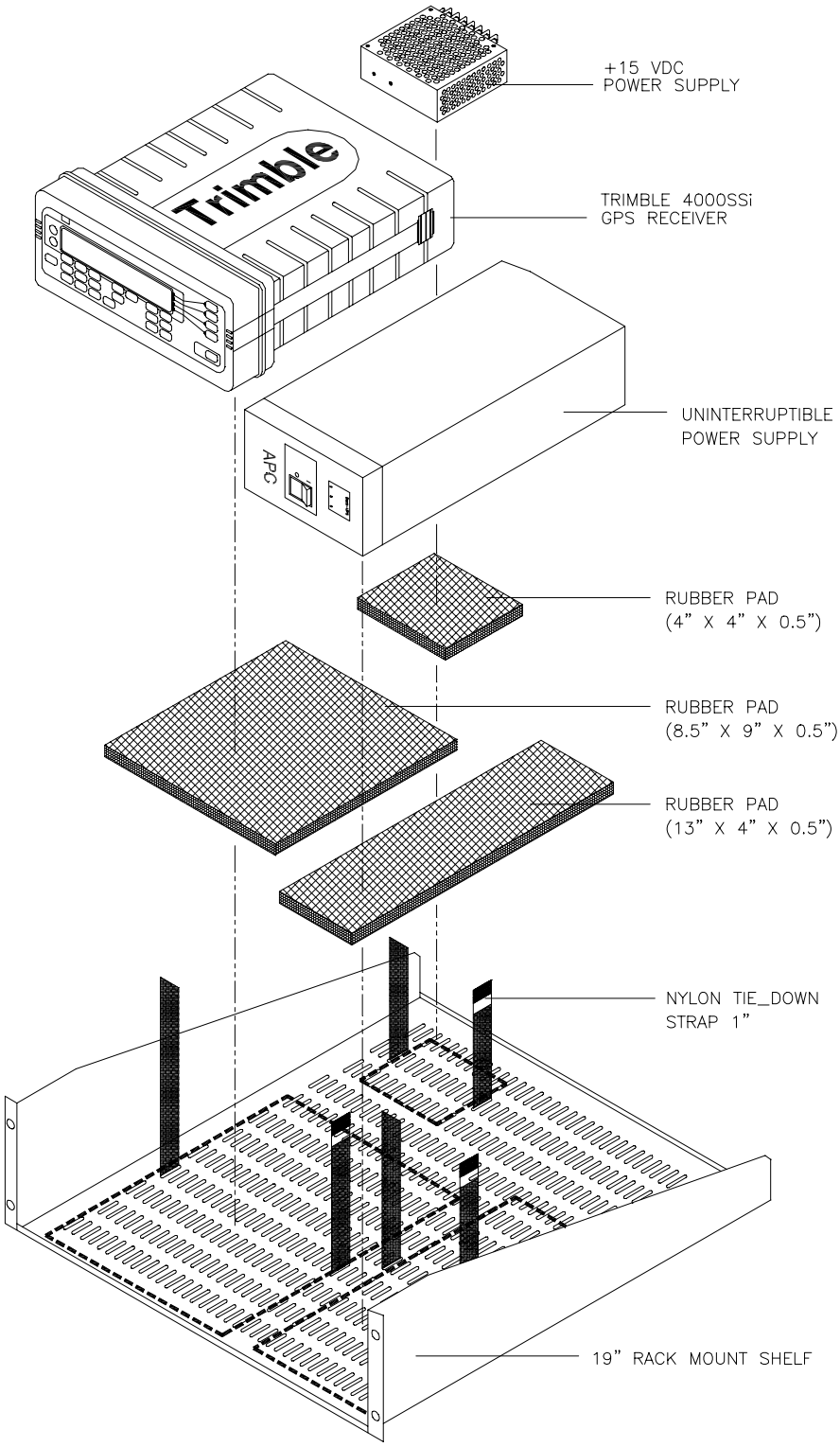

Figure 11-2 GPS Electronics Mechanical Assembly

11.1.1.1 Receiver Assembly

The receiver assembly is a Trimble Model 4000SSi Dual Frequency Receiver (see Figure 11-3). Once survey is enabled, it runs continuously collecting data on a half-hourly cycle. Normally, data are down loaded from the receiver to the GPS Hub in Boulder, CO every half-hour. If communication problems prevent the normal down load cycle from occurring, the receiver is equipped with enough memory to buffer approximately one week of data. However, once the receiver's memory fills up, data collection stops until the files on the receiver are either down loaded or deleted.

The receiver rear panel interface ports ***AUX*** and ***I/O 2*** are 7-pin (Female) *Lemo* connectors, ports ***PWR-I/O 1*** and ***PWR 2&3*** are 5-pin (Female) *Lemo* connectors. The ***ANTENNA*** port is a coaxial (Female) Lemo connector and the ***EXT REF*** port is a BNC (Female) connector.

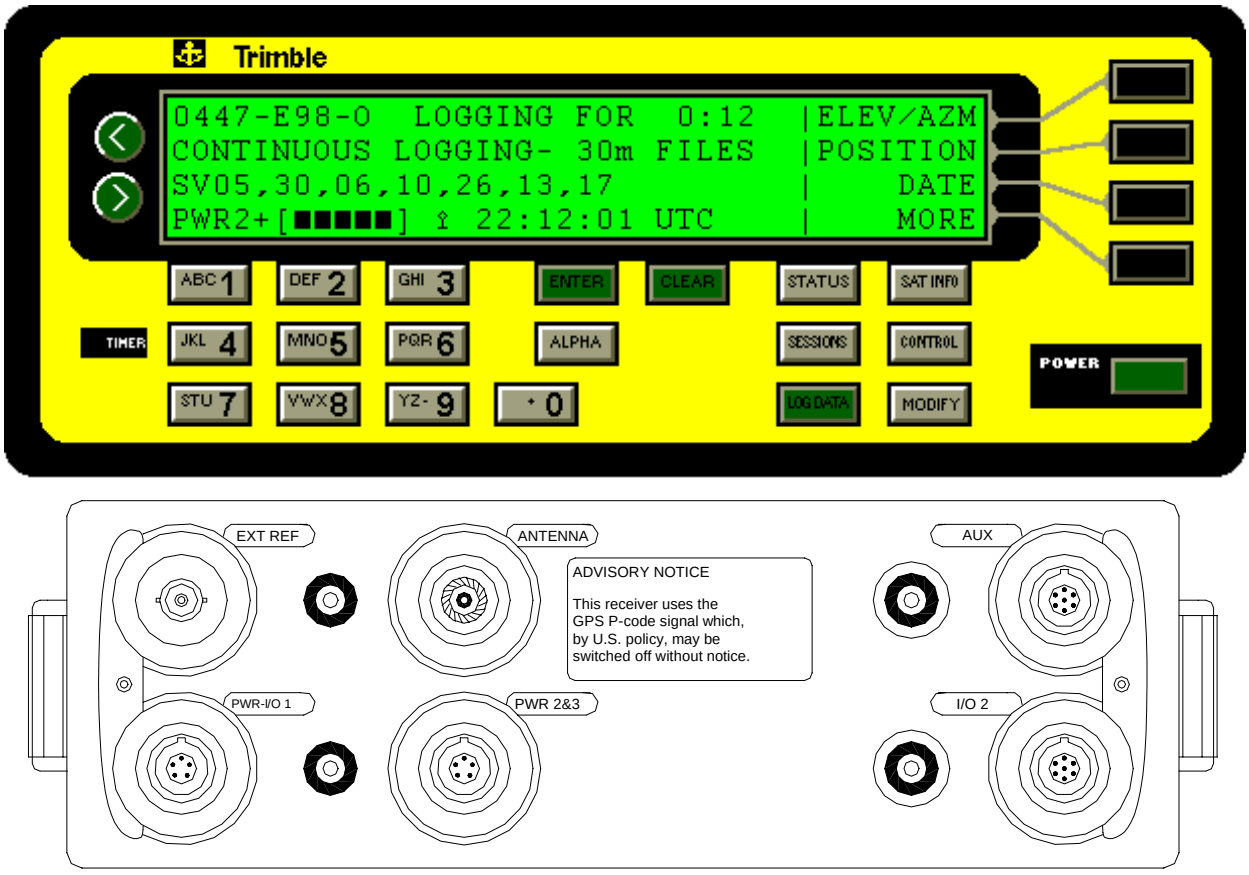

Figure 11-3 Trimble GPS Receiver Front and Rear Panel Views

11.1.1.2 +15 VDC Power Supply Assembly

The +15 VDC Power Supply Assembly provides the GPS receiver's supply voltage (see Figure 11-4). The power supply accepts 120 VAC input and can provide up to 1 Amp of output current at 15 VDC.

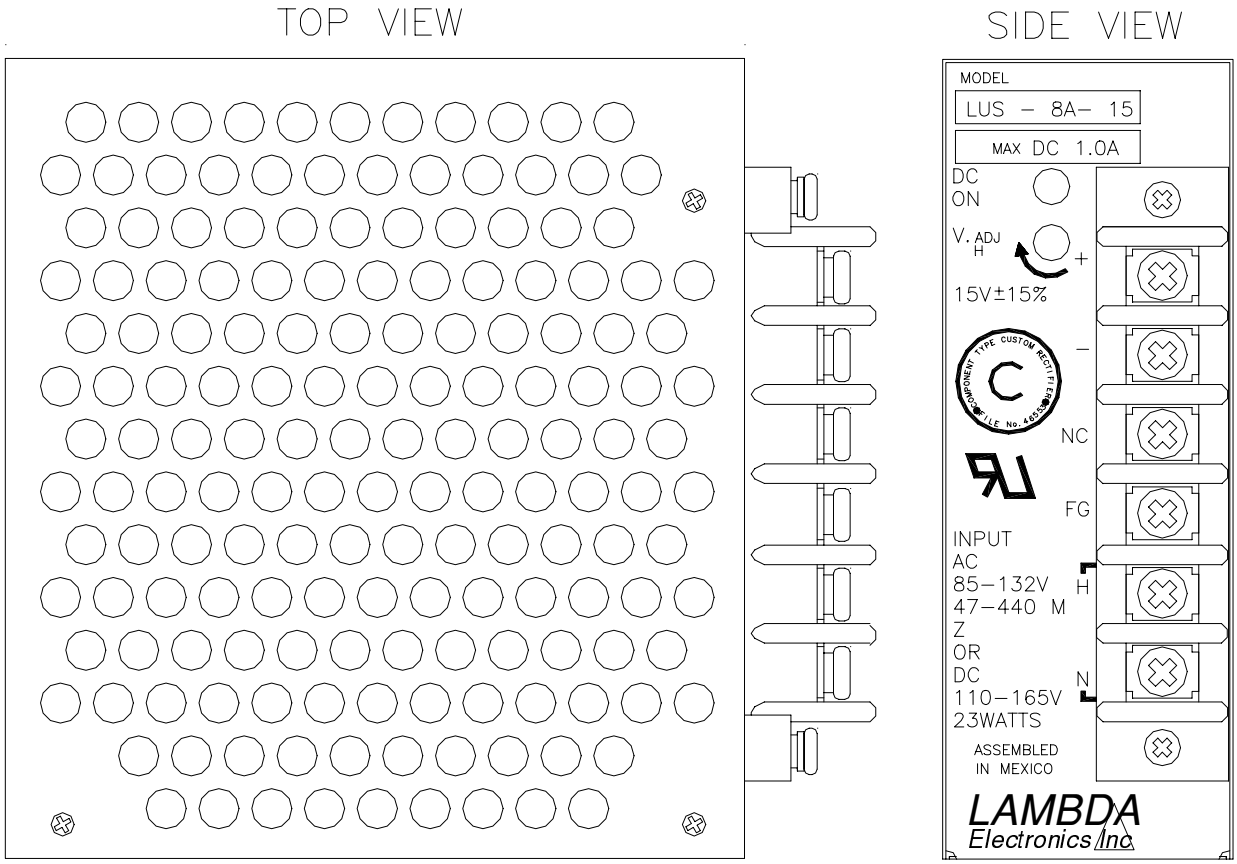

Figure 11-4 15 VDC Power Supply

11.1.1.3 Uninterruptible Power Supply (UPS) Assembly

The UPS supplies AC line voltage for the +15 VDC Power Supply Assembly (see Figure 11-5). The UPS is rated at 300 VA, which is sufficient capacity to run the receiver for several hours during a localized power failure.

Note: Replacement UPS assembly battery terminals are disconnected for shipment. Always inspect the UPS to insure that the battery terminals are connected prior to installing the replacement unit.

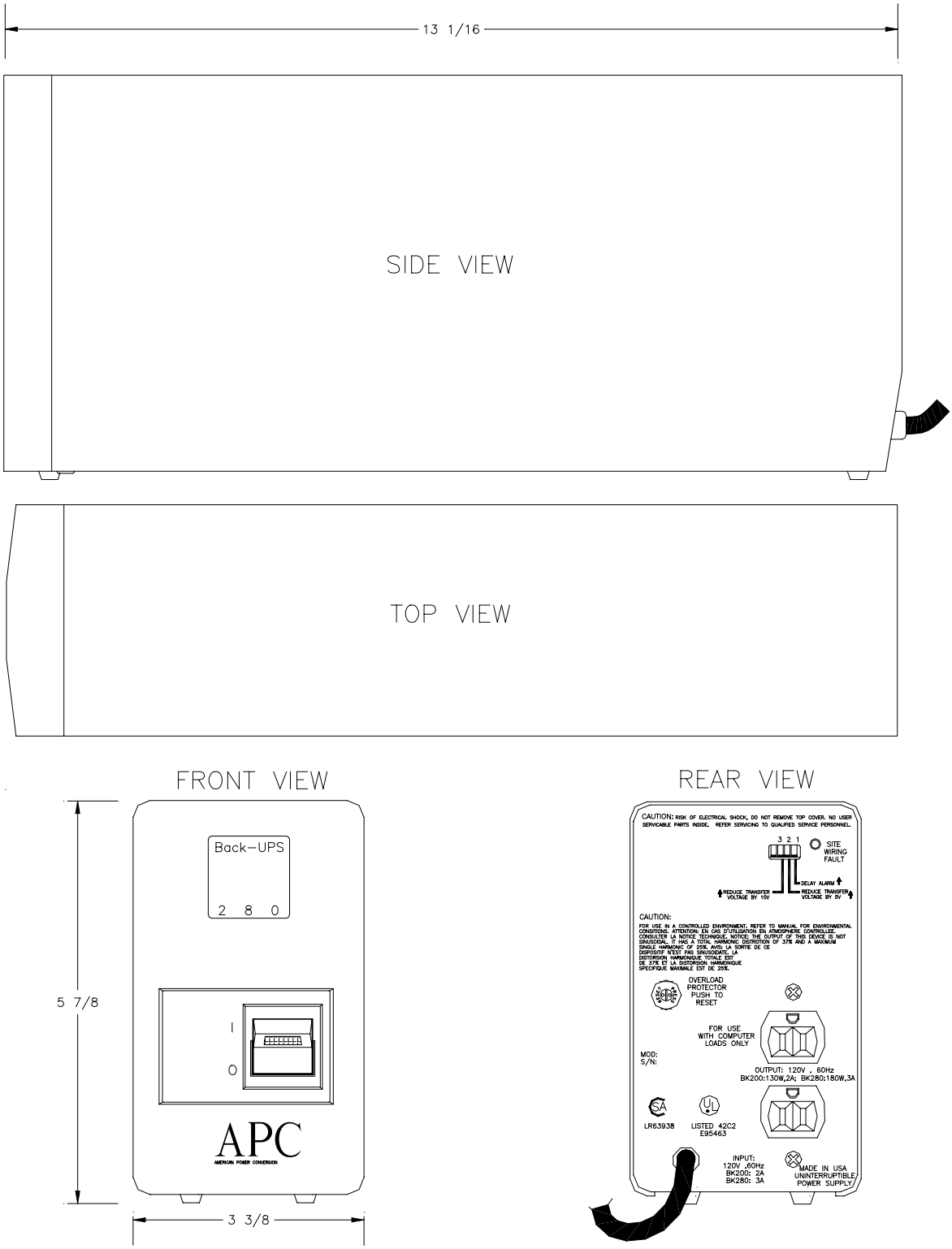

Figure 11-5 UPS Assembly

11.1.2 Antenna Assembly

11.1.2.1 Dual Frequency Antenna Assembly

Trimble's dual frequency Micro-centered™ L1/L2 Antenna provides high-precision results using Trimble's patented technology (see Figure 11-6). The Micro-centered Antenna provides phase-center stability similar to Choke Ring Antennas and improves positions by up to 5 mm. The ground plane enhances phase center stability in high-multipath environments. The antenna's interface port is a standard type N (Female) connector.

Figure 11-6 Micro-Centered Antenna

11.1.2.2 Antenna Mount Assembly

The Antenna Mount Assembly is designed to allow a GPS antenna to be mounting on the one of the corner fence posts surrounding the profiler antenna compound (see Figure 11-7). The base fits over a 3" post and is fastened using six set-screws. The upper portion of the assembly provides mounting and leveling adjustments for the GPS antenna.

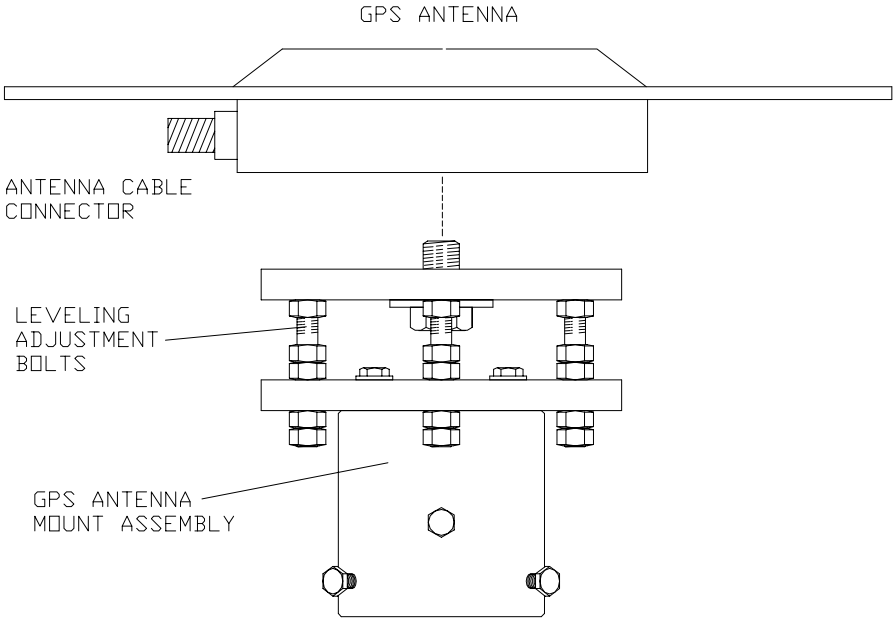

Figure 11-7 GPS Antenna Mount Assembly

11.1.2.3 Antenna Radome Assembly

The GPS antenna radome is a plastic cone that fits over the antenna assembly to help prevent snow and ice from accumulating on the antenna ground plane surface (see Figure 11-8). The radomes are primarily used at northern locations where snow-fall is most prevalent.

The radome attaches to the antenna ground plane using special brackets made of phenolic plastic (see Figure 11-9). Six brackets clamp onto the antenna ground plane using 2 nylon set-screws. The radome attaches to the adaptors using six nylon screws.

Figure 11-8 Antenna Radome

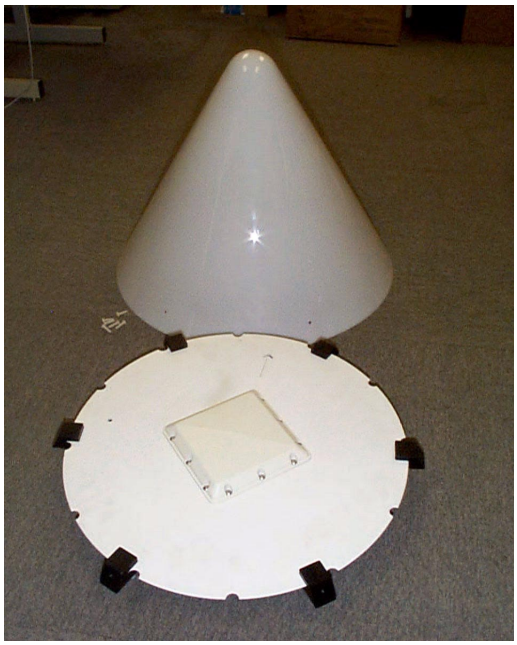

Figure 11-9 Radome Fasteners

11.1.3 System Cabling and Communication Interfaces

Figure 11-10 is the cabling interconnection diagram for the GPS-IPW Observing System. Figure 11-11 provides specification for the GPS receiver power cable. Figure 11-12 provides the specification for the Data Communications Equipment (DCE) cable that connected to port ***PWR I/O 1*** on the GPS receiver rear panel. The DCE cable provides local RS-232 interface with the receiver. Figure 11-13 provides the specifications for the Data Terminal Equipment (DTE) cable that connects to port ***I/O 2*** on the GPS receiver rear panel. The DTE cable provides an RS-232 Null-Modem interface for communications equipment.

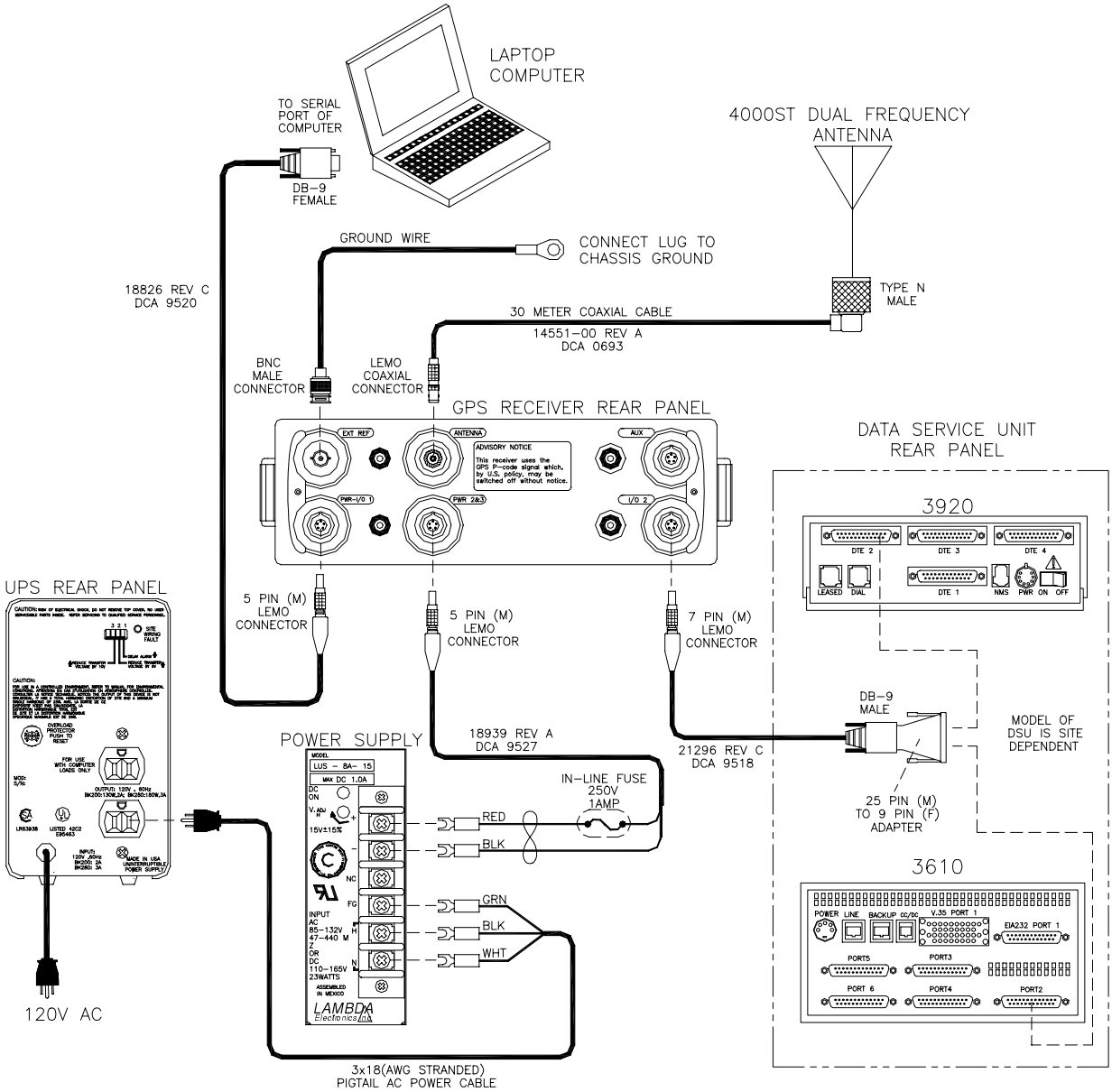

Figure 11-10 GPS-IPW System Cabling Diagram

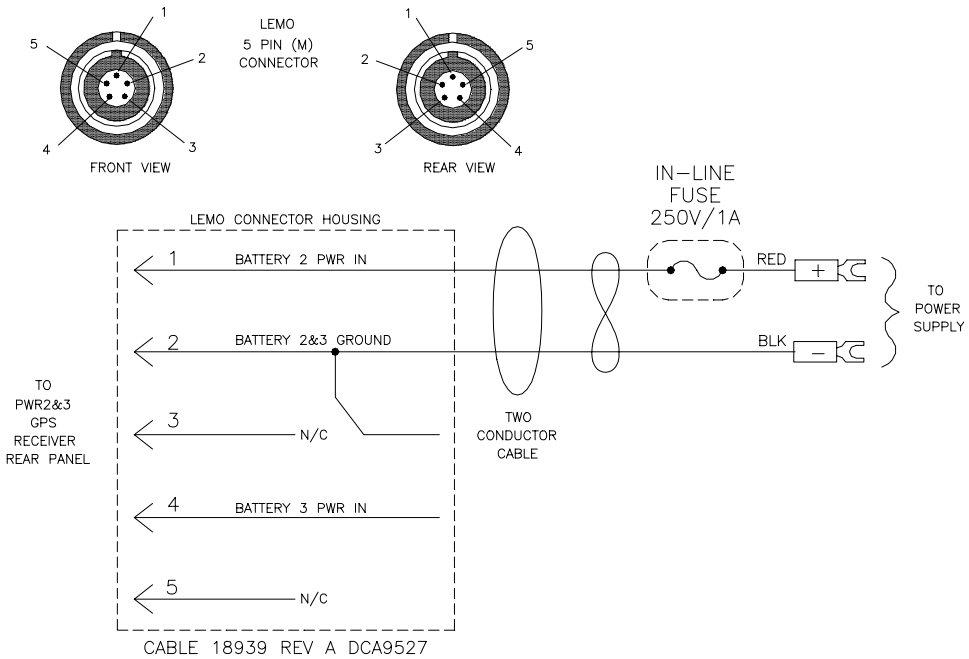

Figure 11-11 GPS Receiver Power Cable Specifications

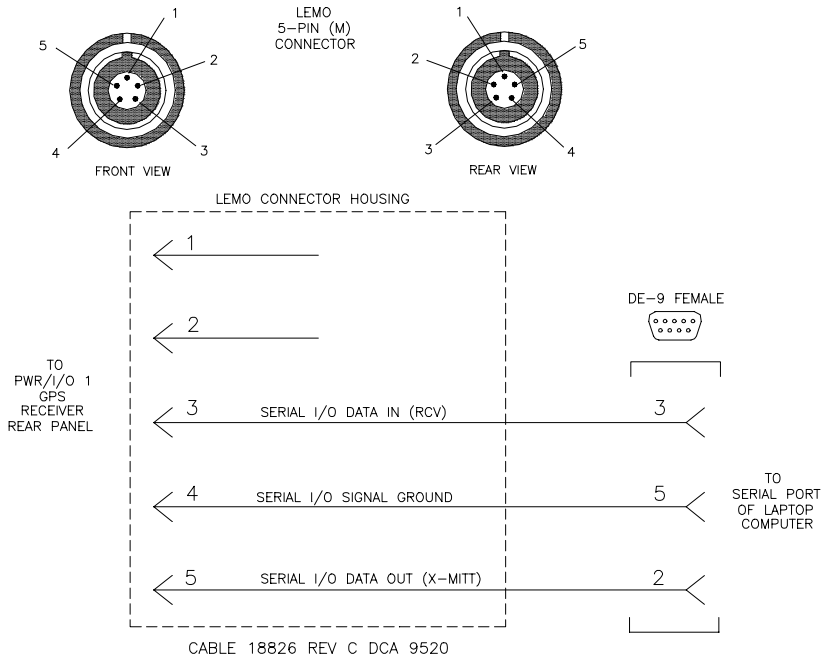

Figure 11-12 GPS Receiver DCE Cable Specifications

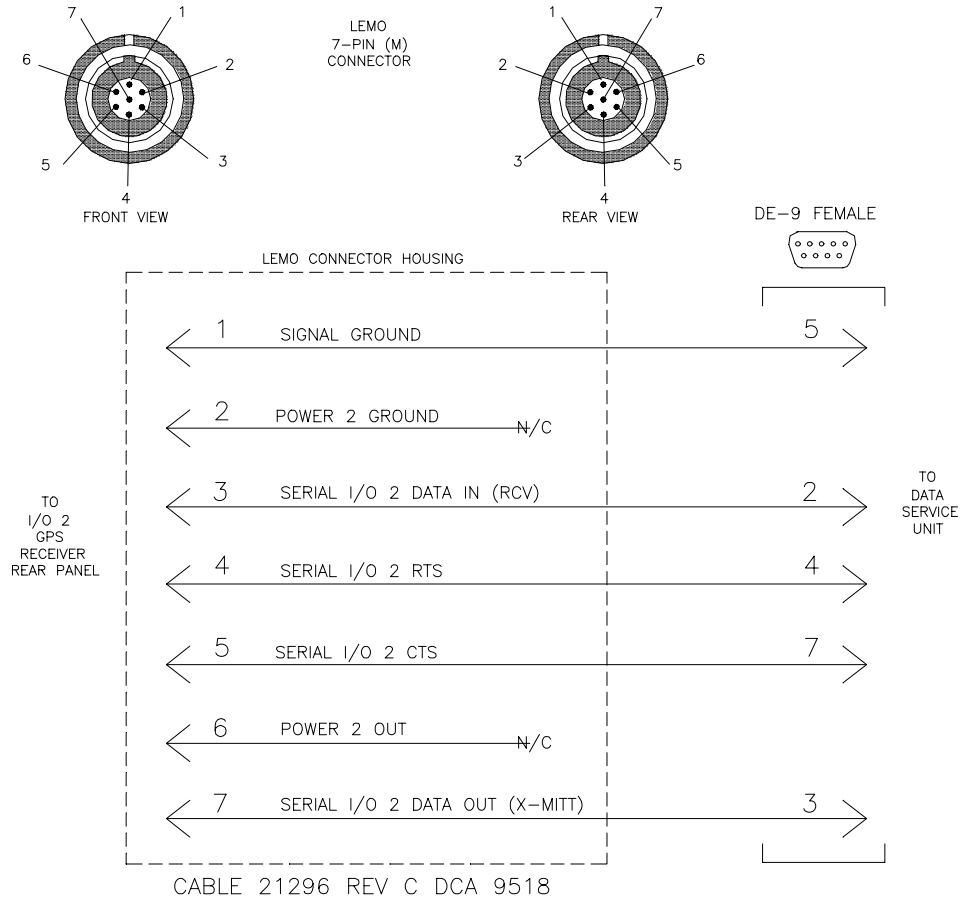

Figure 11-13 GPS Receiver DTE Cable Specifications

11.2 Operations

11.2.1 Determining Receiver & Antenna Health and Status

GPS receiver and antenna operation is verified by viewing the receiver STATUS display. The STATUS display is accessed by pressing the *STATUS* key on the GPS receiver front panel. Figure 11-14 is a sample STATUS display of a working receiver and antenna. The major indicators are described below.

Number of satellites visible to the receiver: A working receiver should track multiple satellites at any given time. In the example in Figure 11-14, the third line ***SV05, 30, 06, 10, 26, 13, 17*** indicates seven (7) satellite vehicles (SV) are currently visible to the receiver. If the receiver is not tracking satellites, there is a problem with the receiver, antenna, or antenna cable.

Session Minute: The receiver is programmed to collect 48 one-half hour sessions of data per day. Sessions begin at the top of the hour, and at 30-minutes past the hour. In this example, the receiver has been logging data for 12 minutes (out of 30 minutes).

Antenna Continuity Symbol: This icon (resembling a yield sign) indicates the receiver detects an antenna. If this icon is not present, there may be a problem with the antenna or antenna cable.

Battery Voltage: Indicates that DC power is being supplied on ***PWR 2&3*** and the battery level is at optimum level. Since the receiver is powered from a DC power supply, the DC level indicator should always indicate optimum battery level.

Current Time: The receiver acquires its time from the GPS satellites (*hh:mm:ss UTC*). If the receiver does not have a solid lock on the satellites, the time display reverts to *hh:mm*. If seconds are not visible on the display, a problem with the receiver, antenna, or antenna cable may exist.

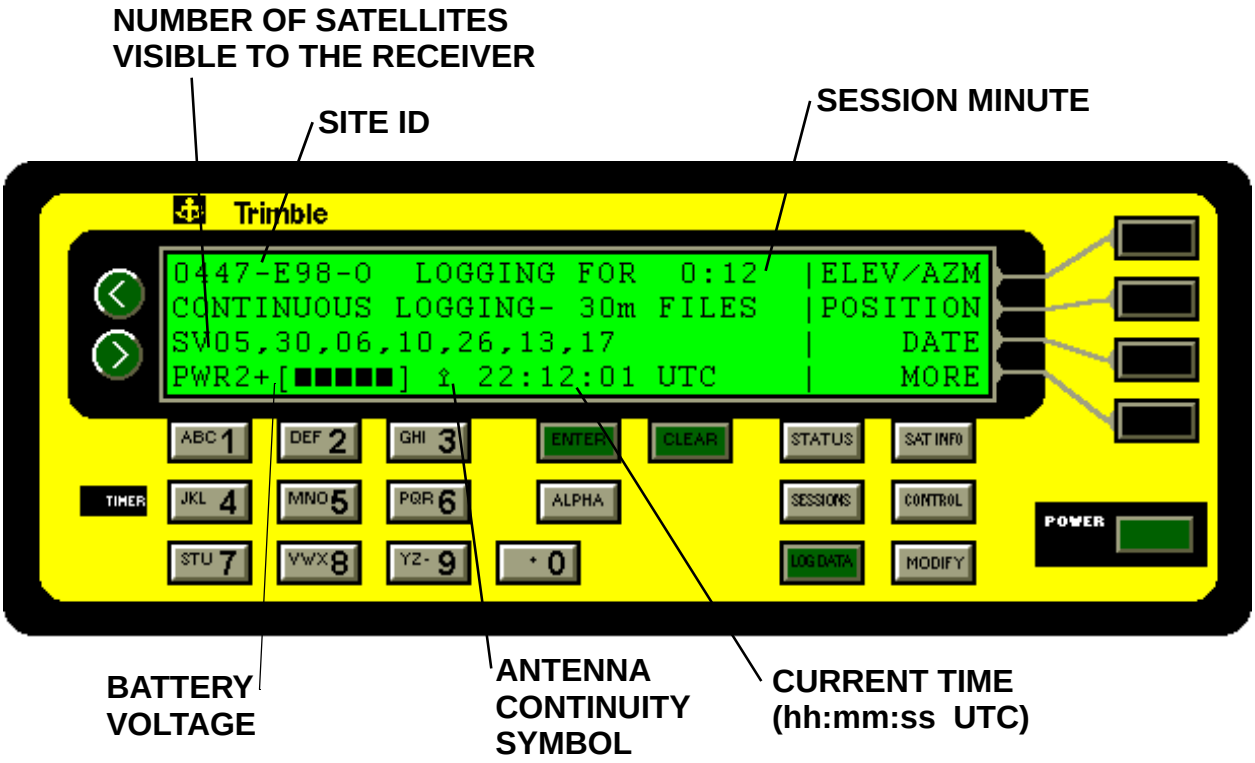

Figure 11-14 GPS Receiver Front Panel Status Display

11.2.2 Starting Survey

1. Press the ***LOG DATA*** key on the GPS receiver Front Panel, the following menu options are displayed.

```
     QUICK-START NOW! (SINGLE SURVEY) --
    START PRE-PLANNED (SINGLE SURVEY) --
START FAST STATIC OR KINEMATIC SURVEY --
                                  MORE --
```

2. Select ***QUICK-START NOW! (SINGLE SURVEY) --*** from the display options (press black key to right of display). The receiver starts the survey and the display changes to the STATUS display.

11.2.3 Ending Survey

1. Press the ***LOG DATA*** key on the Trimble Front Panel. The following options are displayed.

```
SURVEY:                          |USER INPUT
                                 |   CHANGES
                                 |
                                 |END SURVEY
```

2. Select ***END SURVEY*** from the display options (press black key to right of display).

```
                                 | YES
  STOP THE CURRENT SURVEY ?      |
                                 |
                                 |  NO
```

3. Select ***YES*** from the display options (press black key to right of display). The receiver ends the current survey and the display changes to the STATUS display.

11.2.4 GPS Receiver Re-initialization (Hard Reset)

Occasionally a GPS receiver's memory can become corrupt and cause the receiver to behave erratically. Many times, this type of problem can cleared by re-initializing the GPS receiver.

1. Press the ***LOG DATA*** key on the Trimble Front Panel. If the receiver is currently surveying, the following options are displayed. If the GPS receiver is not currently surveying, go to Step 3 below.

.

```
SURVEY:                          |USER INPUT
                                 |   CHANGES
                                 |
                                 |END SURVEY
```

2. Select ***END SURVEY*** from the display options (press black key to right of display).

```
                                 | YES
  STOP THE CURRENT SURVEY ?      |
                                 |
                                 |  NO
```

3. Select ***YES*** to confirm ending survey. Press and hold down the ***POWER*** key on the Trimble front panel until the receiver powers-down.

4. Press and hold down the ***CLEAR*** and ***LOG DATA*** and ***POWER*** keys simultaneously, until the receiver beeps. The following message should appear on the display:

```
 4000SSi GEODETIC SURVEYOR    |CLEAR ALL
         TEST MENU            |
        SETUP/CONTROL         |
                              |
```

5. Select ***CLEAR ALL*** from the display (press black key to right of display) The following message will appear on the display.

```
           CLEAR MEMORY              |
CAUTION: PRESSING <YES> WILL CAUSE | YES
ALL NON-VOLATILE RAM TO BE ERASED!!|
RECEIVER WILL RESTART              |  NO
```

6. Select ***YES*** from the display options (press black key to right of display). The receiver restarts, and goes through its normal boot cycle.

Re-initializing the GPS receiver will cause stored parameters to be lost. See Section 11.2.5 and Section 11.2.6 for information about configuring communications and survey parameters.

11.2.5 Configuring Communications Parameters

1. Press the ***CONTROL*** key on the Trimble front panel, the following message will appear on the display.

```
                CAUTION!
 MODIFYING CERTAIN CONTROL PARAMETERS
    MAY CAUSE LOSS OF LOGGED DATA!
PRESS CONTROL TO CONTINUE, CLEAR TO EXIT
```

2. Press the ***CONTROL*** key again to continue. The following message appears on the display.

```
RECEIVER CONTROL:   | LOGGED DATA FILES
(1 OF 6)            |  POWER-UP CONTROL
                    | SV ENABLE/DISABLE
                    |              MORE
```

3. Select ***MORE*** from the display options (press black key to right of display). The following message appears on the display.

```
RECEIVER CONTROL:     | ADJUST LOCAL TIME
(2 OF 6)              |  BAUD RATE/FORMAT
                      |   REMOTE PROTOCOL
                      |              MORE
```

4. Select ***BAUD RATE/FORMAT*** from the display (press black key to right of display). The following options appear on the display

:

```
SERIAL PORT 1 SETTINGS <- CHANGE
SERIAL PORT 2 SETTINGS <- CHANGE
```

5. Select ***SERIAL PORT 1 SETTINGS*** or ***SERIAL PORT 2 SETTINGS*** from the display options (press black key to right of display). The following parameter options appear on the display.

```
PORT 1 BAUD RATE [    4800  ] <- CHANGE
          FORMAT [ 8-NONE-1 ] <- CHANGE
    FLOW CONTROL [   NONE   ] <- CHANGE
```

6. Change ***BAUD RATE*** to ***4800*** by pressing the corresponding black key (to right of display) repeatedly until the desired baud rate is displayed.

7. Change ***FORMAT*** to ***8-NONE-1*** by pressing the corresponding black key (to right of display) repeatedly until the desired setting is displayed.

8. Change ***FLOW CONTROL*** to ***NONE*** by pressing the corresponding black key (to right of display) repeatedly until the desired setting is displayed.

9. Repeat this process for Port 1 and Port 2.

11.2.6 Configuring Survey Parameters

1. Press the ***LOG DATA*** key.

2. Select ***MORE*** from the display (press black key to right of display).

3. Select ***SETUP SURVEY CONTROLS*** from the display (press black key to right of display).

4. Select ***MODIFY QUICKSTART CONTROLS*** from the display (press black key to right of display).

5. Select ***MORE*** from the display (press black key to right of display). The following options appear on the display.

```
QUICKSTART CONTROLS                |MORE
CONTINUOUS LOGGING:  ON            |CHANGE
LOG FILE DURATION: 0030 minutes    |CHANGE
                                   |
```

6. Set ***CONTINUOUS LOGGING*** = ***ON*** by pressing the *CHANGE* key to the right of the display.

7. Set ***LOG FILE DURATION*** = ***0030 minutes*** by repeatedly pressing the corresponding black key to the right of the display.

8. Commit the changes by pressing the green ***ENTER*** key. The display will change to the next page of *QUICKSTART CONTROLS*.

```
QUICKSTART CONTROLS                |MORE
STORE POSITION:   NORMALLY         |CHANGE
ELEVATION MASK:+07°  MIN SVs: 01   |MINUS
MEAS SYNC TIME: 030.0 SEC          |ACCEPT
```

9. Set ***STORE POSITION*** = ***NORMALLY*** by pressing the *CHANGE* option key on the right side of the display.

10. Set ***ELEVATION MASK*** = **+07°**. Press the green arrow keys (left side of display) to move the cursor position. Press the black key to the right of the display to change the polarity (+/-). Press the numeric keys to enter the values.

11. Set ***MIN SVs*** (minimum satellite vehicles) = **01**

12. Set ***MEAS SYNC TIME*** = **030.0 SEC**

13. Select ***ACCEPT*** from the display options (press black key to the right of display)

11.2.7 Upgrading the GPS Receiver Firmware

Periodically, enhancements and revisions are made to the Trimble receiver firmware. Rather than changing-out the receiver hardware, the receiver's firmware can by updated on site by running a DOS program that re-flashes the program memory.

Acquiring the Firmware Upgrade

The firmware updates are down-loaded from the NOAA GPS-IPW Web page:

http://www-dd.fsl.noaa.gov/gps/gps_support/

If Web access is not available to you, contact the Profiler Control Center at 303-497-6033 for an alternative method to acquire the firmware upgrade.

Once you have reached the Web page, click the FTP Icon and down-load the self extracting zip file to your local machine. Extract the files from the zip archive to a temporary directory (note the self-extraction program requires *Microsoft NT or Windows 95* or greater.) Copy the extracted files to a 3.5" 1.44 MByte floppy diskette.

*** NOTE ***

The PMT computers located at most of the profiler sites do not support 1.44 MByte diskette format. The minimum computer hardware requirements to perform the GPS Receiver Firmware Update are:

- DOS or Windows Operating system
- (1) - 3.5" 1.44 MByte Floppy Disk drive
- (1) - 9-pin Serial Communications Port (COM1 or COM2)
- (1) - DE-9 pin (M) to DB-25 pin (F) adapter (if the notebook computer has a 25 pin (M) serial port.)

Updating the Firmware

1. Press the ***LOG DATA*** key on the Trimble GPS receiver front panel.

2. Select ***END SURVEY*** from the display options (press black key to right of display).

3. Select ***YES*** from the display options (press black key to right of display).

4. Power-down the Trimble GPS Receiver by pressing and holding the ***POWER*** key.

5. Place the notebook computer near to the GPS receiver.

6. Connect the GPS ***PWR-I/O 1*** communications interface cable to the notebook computer's serial port (preferably COM1, but COM2 will work also.) Refer to Figure 11-10 for cabling diagram.

7. Power-up the GPS receiver and wait for it to complete its boot sequence.

If the notebook computer has a hard disk-drive, create a directory called **C:\gps_fw**. Copy the upgrade files from the floppy diskette to **C:\gps_fw**. Change directory (CD) to **C:\gps_fw**.

8. From the DOS prompt on the Notebook computer, type one of the following command:

   UPDATE 1 <Enter> (if notebook serial port COM1 is being used)
   UPDATE 2 <Enter> (if notebook serial port COM2 is being used)

   As the *UPDATE* program begins to execute, it tries to auto-detect the GPS receiver's communications parameter settings (refer to line 3 in Figure 11-15). If the program is able to auto-detect the parameters, the program proceeds to completion (lines 4 - 16 in Figure 11-15). During the update process, the GPS receiver displays the message ***REMOTE MONITOR ACTIVE***.

   If the *UPDATE* program seems to get stuck at line 3 (referring to Figure 11-15), the program was unable to auto-detect the receiver's communications parameters. If this happens, the notebook computer will need to be rebooted or power-cycled to break-out of the *UPDATE* program. To remedy this problem, try changing the *baud rate* or *parity* setting of *Port 1* on the GPS receiver and repeat step 8 of this procedure. (Refer to Section 11.2.5 for information about configuring GPS receiver communications parameters).

```
1       4000 SE/SSE/SSi & 7400MSi REMOTE MONITOR, V4.32

2       Initializing COM1
3       Finding receiver baud setting.  Trying: 4800 baud, odd parity
4       Establishing link at 4800 baud, odd parity
5       PPU Version = 3.34
6       Receiver Type=05

7       Link established.  Defaulting to 9600 baud, no parity
8       Changing port settings to: 38400 baud, no parity
9       SE/SSE/SSi H/W target receiver detected.
10      HP64000 header name - HP V1.7
11      Code rev = 7.19     Date: 02-Feb-00     Total bytes= 636766
12      Authorized Firmware Version = 7.31

13      DOWNLOAD AUTHORIZED.

14      Writing receiver program....000ABFF (0-100%)
15      Receiver programming completed
16      Done.
        C:\>
```

Figure 11-15 Notebook Computer Display During Update Process

9. Upon successful completion of the firmware upgrade, the GPS receiver reboots, beeps several times and displays the following message:

```
RESTARTED BY
REMOTE MONITOR
ddd dd-mmm-yy  hh:mm GPS
** PRESS CLEAR KEY **
```

Press the green ***CLEAR*** key to continue.

The firmware update process causes the GPS receiver to loose several parameters that will need to be re-entered manually from the receiver front panel. Refer to Section 11.2.5 for procedures for configuring communications parameters. Refer to Section 11.2.6 for procedures for configuring survey parameters.

11.3 GPS-IPW System Troubleshooting

11.3.1 Isolating Faulty Antenna or Receiver

It is often impossible to remotely diagnose specific component failures of the GPS-IPW electronics equipment. When a GPS-IPW system fails, a replacement GPS receiver, GPS antenna, and a 10-meter GPS antenna cable are shipped to the technician who will conduct the maintenance. Specific component failures must be isolated by the on-site technician using a process of elimination. The following procedures and the flowchart shown in Figure 11-16 can be used to isolate faulty GPS receiver, antenna, and/or antenna cable.

1. Connect the 10-meter antenna cable to the replacement GPS antenna and place the antenna on the ground outside the shelter in an area that has a clear view of the sky. Connect the other end of the 10-meter cable to the *ANTENNA* input jack on the rear panel of the existing GPS receiver. Instruct the existing GPS receiver to begin surveying (refer to Starting Survey in Section 11.2.2). Determine if the GPS receiver begins to lock-on to satellites (refer to Section 11.2.1 Determining Receiver Health and Status.)

   If the receiver begins to track satellites, then the existing GPS antenna or antenna cable may be damaged. Try replacing the GPS antenna first. See Section 11.4.2 for GPS antenna replacement procedures.

After the GPS antenna has been replaced, if the GPS receiver still does not lock-on to any satellites, then the existing GPS antenna cables must be replaced. Refer to Section 11.4.3 for GPS antenna cable replacement procedures.

2. If the GPS receiver does not lock-on to any satellites using the new antenna/ cable, then the GPS receiver probably damaged and must be replaced. Refer to Section 11.4.1 for GPS receiver replacement procedures.

3. After replacing the GPS receiver, if the new GPS receiver does not lock-on to any satellites, then replace the existing GPS antenna. If the receiver does not lock-on to any satellites after the GPS receiver and GPS antenna have been replaced, then replace the GPS antenna cable.

11.3.2 Power Supply Troubleshooting

1. Check the output of the UPS with a voltmeter, the output should be ~ 110 - 120 VAC. If the UPS is failed, replace the UPS assembly

2. Verify the terminal block screws on the +15 VDC Power Supply Assembly are tightened securely.

3. Check the output voltage of the +15 VDC Power Supply with a voltmeter. If the power supply is failed, replace +15 VDC Power Supply assembly.

4. Inspect in-line fuse in the GPS receiver power cable.

5. Verify that the *LEMO* connector in port ***PWR 2&3*** on the GPS receiver rear panel is fully seated.

11.3.3 Communications Troubleshooting

Normally, the GPS receiver port ***I/O 2*** is connected to ***Port 2*** of a Paradyne Data Service Unit (DSU) through a Null-Modem cable (see Figure 11-10 for cabling diagram). Proper operation of the DSU can be verified by connecting the serial port of a notebook computer to the suspect DSU port using a standard (straight through) RS-232 cable. A terminal program can be used

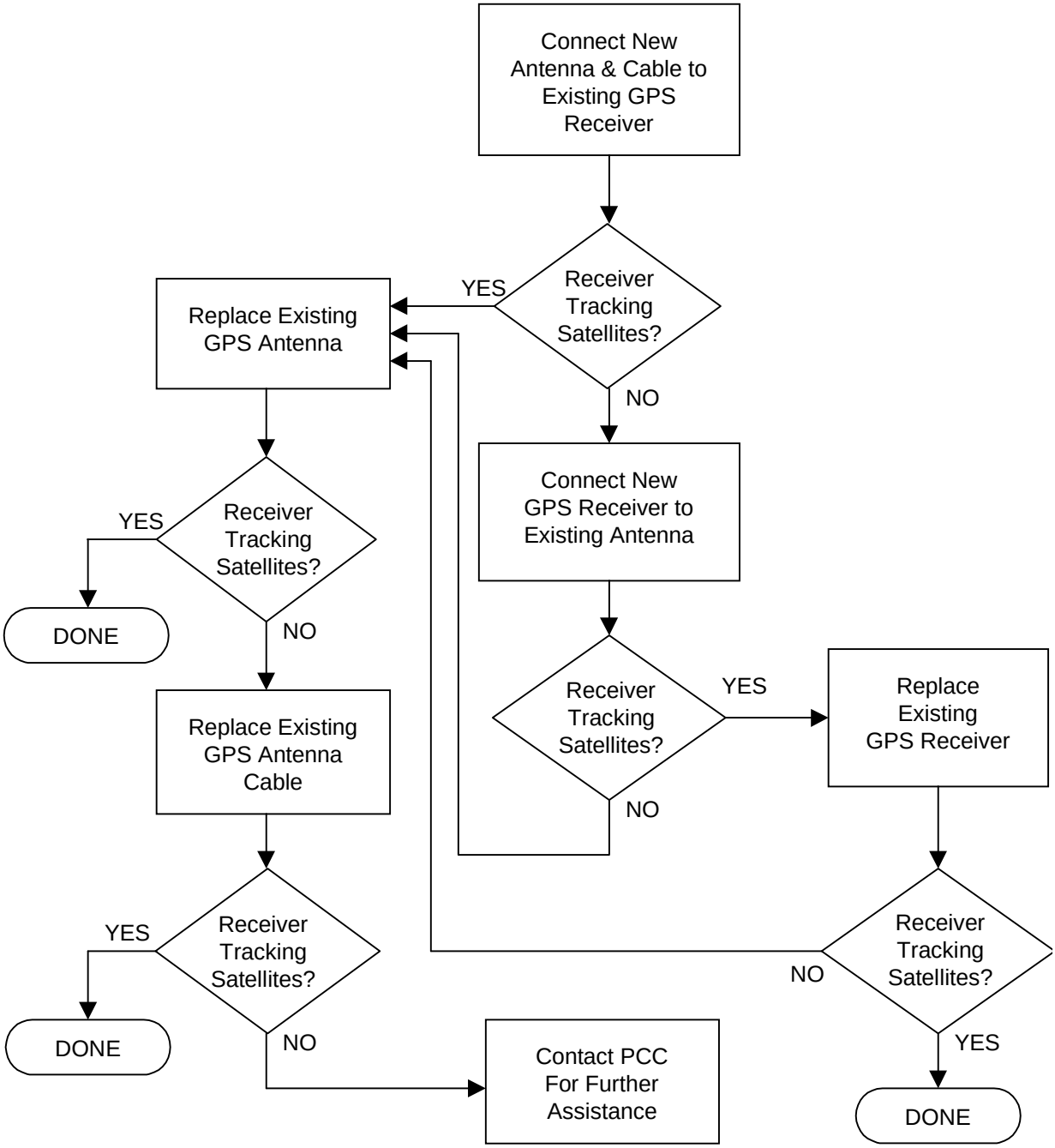

Figure 11-16 GPS Receiver/Antenna Troubleshooting Flowchart

11.4 Replacement Procedures

11.4.1 GPS Receiver Replacement

1. Power-down the GPS electronics assembly by turning off the power switch located on the front panel of the UPS assembly.

2. Loosen the nylon tie-down strap holding the GPS receiver into position.

3. Pull the GPS receiver forward from the 19” rack mount tray just far enough to gain access to the rear panel connections. Disconnect (4) *LEMO* connectors from the receiver by gently pulling the cable connector body straight out from the jack. If the receiver is equipped with a ground wire, disconnect the ground wire’s BNC connector from the receiver’s *EXT REF* port. Remove the GPS receiver assembly from the rack.

4. Rest the replacement GPS receiver on the rack tray and reconnect the interface cables to the same ports they were removed from. Refer to Figure 11-10 for the GPS system cabling diagram. The *LEMO* connectors are keyed, the connector body should be rotated such that the red dot on the cable connector is directly vertical (toward the top of the receiver). Also, be aware that the *LEMO* connectors have 5-pin and 7-pin configurations, the cable connector can be damaged if it is inserted into the wrong jack.

5. If the receiver is equipped with a ground wire, connect the BNC connector or the ground wire to the EXT REF port of the GPS receiver.

6. Position of GPS receiver in the rack-tray and tighten the nylon tie-down strap.

7. Turn on the power switch on the UPS front panel.

8. Press and hold down the *POWER* key on the front panel of the GPS receiver until the unit beeps and begins its boot sequence. After the GPS receiver has completed boot-up, the following options will appear on the display.

```
     QUICK-START NOW! (SINGLE SURVEY) --
    START PRE-PLANNED (SINGLE SURVEY) --
START FAST STATIC OR KINEMATIC SURVEY --
                                 MORE --
```

9. Select *QUICK-START NOW! (SINGLE SURVEY)*, the GPS receiver will start logging data and the display will switch to the STATUS display. See Section 11.2.1 for information about determining GPS receiver health and status.

10. Contact the PCC at 303-497-6033 to verify communications with the new receiver

11.4.2 GPS Antenna Replacement

11.4.2.1 Replacing GPS Antennas with Radomes

1. Power-down the GPS receiver by pressing and holding down the *POWER* key on the receiver front panel until it shuts down.

2. Remove six nylon screws from the outside of the radome housing. Remove the radome from the antenna.

3. Note the orientation of the arrow symbol on the GPS antenna ground plane. Make a scribe mark on the antenna mount assembly (if one does not already exist) to denote the position of the north arrow. The scribe mark is used as a reference to re-orient the replacement antenna.

4. Disconnect the antenna cable by unscrew the type N connector at the base of the antenna assembly.

5. Unscrew the center bolt that attaches the antenna to the mounting assembly (see Figure 11-7). and remove the antenna from the mount assembly.

6. Remove the six radome mounting adaptors from the failed antenna and transfer them to the replacement antenna. Align the radome mounting adaptors with the edges of the circular indentations on the antenna ground plane as shown in Figure 11-9.

7. Record the serial number of the replacement antenna for later reference.

8. Place the antenna/radome assembly in the mount assembly and thread the center bolt of the mount into the bottom of the antenna.

9. Rotate the antenna/radome assembly so the north arrow on the antenna ground plane aligns with scribe mark on the mount assembly, and firmly secure the center bolt.

10. Check the leveling of the antenna by placing a bubble level in the antenna ground plane. If the antenna is not level, it can changed by adjusting the three leveling bolts as shown in Figure 11-7.

11. Connect the antenna cable to the antenna.

12. Attach the radome cover to the antenna assembly as fasten using six nylon screws.

13. Turn on the GPS receiver by pressing and holding down the POWER key on the receiver front panel until the it beeps.

14. Start the survey using the procedure described in Section 11.2.2. It may take several minutes for the receiver to acquire lock on satellites. See Section 11.2.1 for determining receiver health and status.

11.4.2.2 Replacing GPS Antennas without Radomes

1. Power-down the GPS receiver by pressing and holding down the *POWER* key on the receiver front panel until it shuts down.

2. Note the orientation of the arrow symbol on the GPS antenna ground plane. Make a scribe mark on the antenna mount assembly (if one does not already exist) to denote the position of the north arrow. The scribe mark is used as a reference to re-orient the replacement antenna.

3. Disconnect the antenna cable by unscrew the type N connector at the base of the antenna assembly.

4. Unscrew the center bolt that attaches the antenna to the mounting assembly (see Figure 11-7). and remove the antenna from the mount assembly.

5. Record the serial number of the replacement antenna for later reference.

6. Place the replacement GPS antenna assembly in the mount assembly and thread the center bolt of the mount into the bottom of the antenna.

7. Rotate the antenna assembly so the north arrow on the antenna ground plane aligns with scribe mark on the mount assembly and firmly secure the center bolt.

8. Check the leveling of the antenna by placing a bubble level in the antenna ground plane. If the antenna is not level, it can changed by adjusting the three leveling

bolts as shown in Figure 11-7.

9. Connect the antenna cable to the GPS antenna.

10. Turn on the GPS receiver by pressing and holding down the POWER key on the receiver front panel until the it beeps.

11. Start the survey using the procedure described in Section 11.2.2. It may take several minutes for the receiver to acquire lock on satellites. Refer to Section 11.2.1 to determine receiver health and status.

11.4.3 GPS Antenna Cable Replacement

1. Power-down the GPS receiver by pressing and holding down the ***POWER*** key on the receiver front panel until it shuts down.

2. Remove the right side panel from the Beam Steering Unit (BSU) Cabinet. Remove the blank front panel below the BSU chassis assembly.

3. Pull Power Supply #1 chassis and Power Supply #2 chassis out from the Equipment Cabinet.

4. Disconnect the antenna cable from the rear panel of the GPS receiver.

5. Un-spool the excess GPS cable inside the Equipment/BSU Cabinets and straighten the cable length so it can be pulled from underneath the shelter.

6. From underneath the shelter, loosen the cable gland (or remove duct-seal) from the stuffing tube that the GPS antenna cable passes through.

7. Gentle pull the GPS antenna cable out the bottom the shelter through the stuffing tube.

8. The GPS antenna cable is buried in the gravel between the shelter and the fence. The trench is only inches deep (just enough to cover the cable) and always takes a direct route from the shelter to the fence, similar to route shown in Figure 11-17.

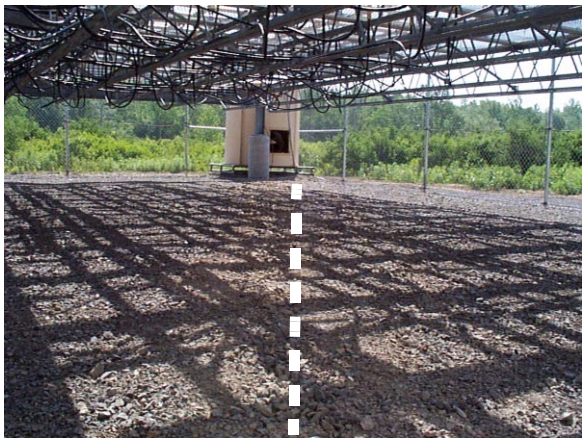

Figure 11-17 GPS Antenna Cable Routing Between Shelter and Antenna

Starting at the shelter, pull up on the antenna cable to lift it out the trench, and work towards the antenna. Once the cable is fully remove from the trench, move the gravel at the base of the fence post to expose the opening to the PVC conduit leading up the fence post to the antenna.

9. Disconnect the cable from the GPS antenna, and pull the entire length of antenna cable out the top of the conduit. This is necessary because the type N connector is too big to pass through the conduit, however, the connector at the other end of the cable will pass through the conduit.

10. Clean out the trench by dragging your heal along the length of the trench, or use a shovel if one is available.

11. Install the replacement antenna cable by feeding the *LEMO* connector through the conduit from the top. Pull the entire cable length through the conduit. Connect the antenna cable's type N connector to the GPS antenna.

12. Lay the antenna cable in the trench (starting at the GPS antenna conduit and work back towards the shelter). Bury the cable in the trench.

13. Feed the antenna cable through the stuffing tube from underneath the shelter. Pull any excess cable length into the shelter and coil the cable inside the Equipment/BSU Cabinets.

14. From underneath the shelter, seal the stuffing tube where GPS antenna cable enters the shelter with Duct-Seal.

15. Connect the GPS antenna cable's *LEMO* connector to the ***ANTENNA*** port on the rear panel of the GPS receiver.

16. Power-on the GPS receiver by pressing and holding down the ***POWER*** key on the receiver front panel until the it beeps.

17. Start the survey using the procedure described in Section 11.2.2. It may take several minutes for the receiver to acquire lock on satellites. Refer to Section 11.2.1 to determine receiver health and status.

11.4.4 Power Supply Replacement

1. Power-down the GPS electronics assembly by turning off the power switch located on the front panel of the UPS assembly.

2. Remove the four mounting screws that fasten the rack-tray to the Equipment Cabinet rails. Pull the rack-tray partially out of the cabinet to access to the power supply assembly.

3. Disconnect the power supply's AC power cord from the UPS receptacle.

4. Loosen the nylon tie-down strap holding the power supply into position.

5. Loosen the screws on the power supply's terminal block and disconnect the cables from the power supply.

6. Connect the AC power cord to the new power supply's terminal block (see Figure 11-10 for wiring diagram). Connect the power cord to the UPS and turn on the UPS. Verify the power supply functions by using a voltmeter to measure the DC output voltage of the power supply.

   If the power supply is outputting 14-15 VDC, turn off the UPS and continue with the installation. If the power supply is not functioning as expected, check the output of the UPS, or check fuses.

7. Connect the DC power cable leads to the power supply terminal block (see Figure 11-10 for wiring diagram).

8. Secure the power supply chassis using the nylon tie-down strap.

9. Mount and secure the rack-tray in the Equipment Cabinet.

10. Turn on the power switch on the front panel of the UPS.

11. Press and hold down the *POWER* key on the front panel of the GPS receiver until the unit beeps and begins its boot sequence. After the GPS receiver has completed boot-up, the following options will appear on the display.

```
     QUICK-START NOW! (SINGLE SURVEY) --
    START PRE-PLANNED (SINGLE SURVEY) --
START FAST STATIC OR KINEMATIC SURVEY --
                                 MORE --
```

12. Select *QUICK-START NOW! (SINGLE SURVEY)*, the GPS receiver will start logging data and the display will switch to the STATUS display. See Section 11.2.1 for information about determining GPS receiver health and status.

11.4.5 UPS Replacement

1. Power-down the GPS electronics assembly by turning off the power switch located on the front panel of the UPS assembly.

2. The UPS's AC power cord is plugged into an outlet power strip at the back of the Equipment Cabinet and is not easily accessible. One method to gain access to this power strip is to remove the top cover panel from the Equipment Cabinet. Another (less feasible) method is to remove the right side panel from the BSU Cabinet and try to reach the power strip from the side. Unplug the UPS's AC power cord from the power strip.

3. Loosen the nylon tie-down strap holding the UPS into position.

4. Reach behind the UPS and disconnect the power supply's AC power cord from the receptacle on the rear panel of the UPS. Pull the UPS assembly out the front of the Equipment Cabinet.

5. Install the replacement UPS and connect the power supply's AC power cord to the receptacle on the rear panel of the UPS.

6. Secure the UPS assembly in the rack-tray with the nylon tie-down strap.

7. Plug the UPS's AC power cord into the AC outlet strip at the back of the Equipment Cabinet. Install cabinet top or side panels as required.

8. Turn on the power switch on the front panel of the UPS.

9. Press and hold down the *POWER* key on the front panel of the GPS receiver until the unit beeps and begins its boot sequence. After the GPS receiver has completed boot-up, the following options will appear on the display.

```
     QUICK-START NOW! (SINGLE SURVEY) --
    START PRE-PLANNED (SINGLE SURVEY) --
START FAST STATIC OR KINEMATIC SURVEY --
                                 MORE --
```

10. Select *QUICK-START NOW! (SINGLE SURVEY)*, the GPS receiver will start logging data and the display will switch to the STATUS display. See Section 11.2.1 for information about determining GPS receiver health and status.

11.5 Preventive Maintenance

11.5.1 Antenna Inspection

Snow Accumulation - During winter months, inspect the GPA antenna assembly for show or ice accumulation on the antenna ground plane (or radome if applicable). Remove any snow or ice from the antenna (or radome).

Mechanical Integrity - Verify the GPS antenna is mounted securely, and the antenna cable connection is tightened sufficiently. Inspect any visible portions of the GPS antenna cable for deterioration or rodent damage. Report any concerns to the PCC.

11.5.2 UPS Functional Test

A functional test of the UPS assembly can be accomplished by removing AC input power from the UPS, and verifying that the GPS receiver continues to operate. Depending on the site, the UPS may draw power from circuit breaker #24 (Data Processor) or circuit breaker # 23 (Modem/Communications).

THIS PAGE INTENTIONALLY LEFT BLANK

APPENDIX A System Cabling Diagrams

System Cabling Diagram and Cabling Diagrams for Multi-Conductor Cables

THIS PAGE INTENTIONALLY LEFT BLANK

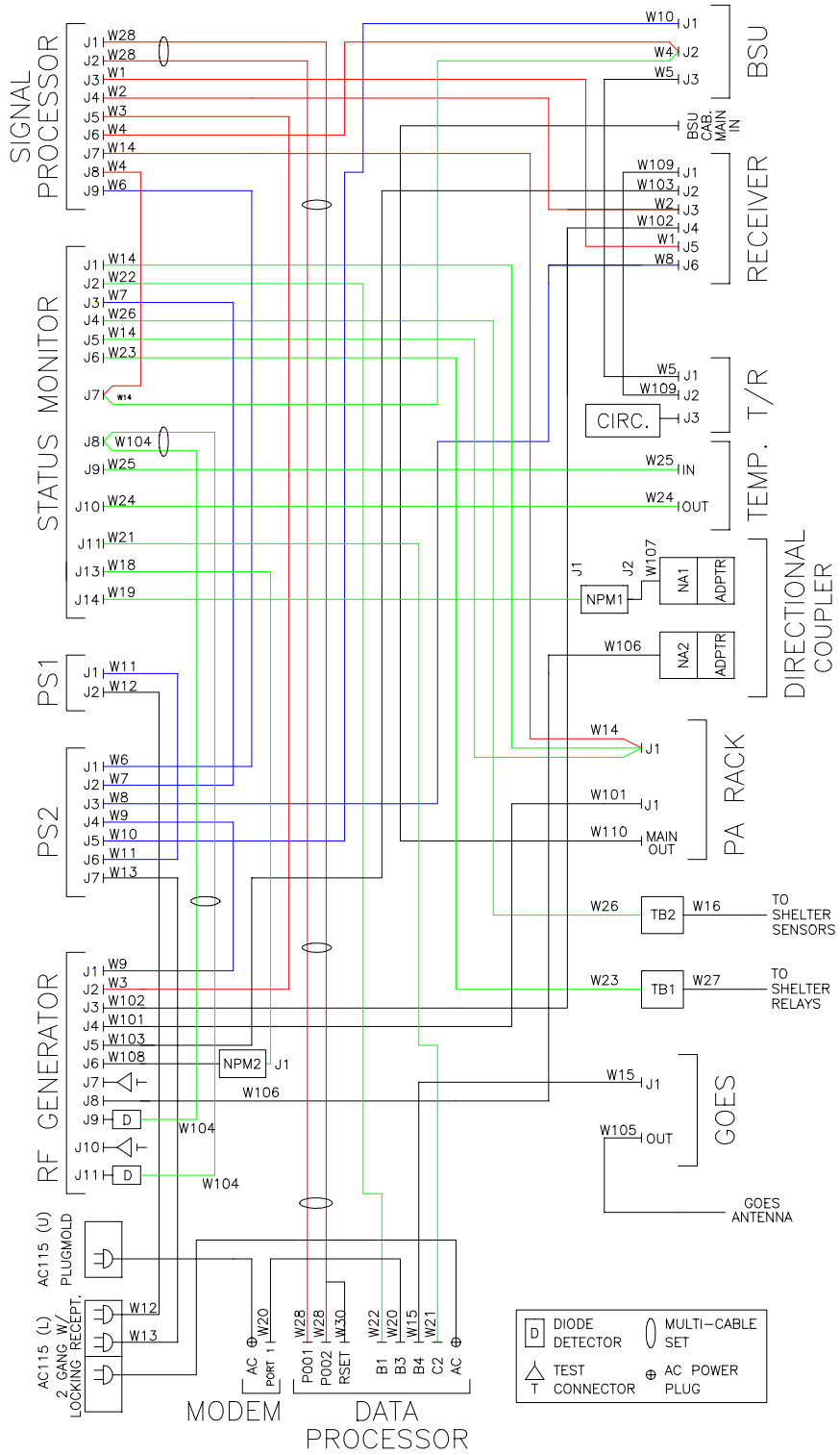

Figure A-1 System Cabling Diagram

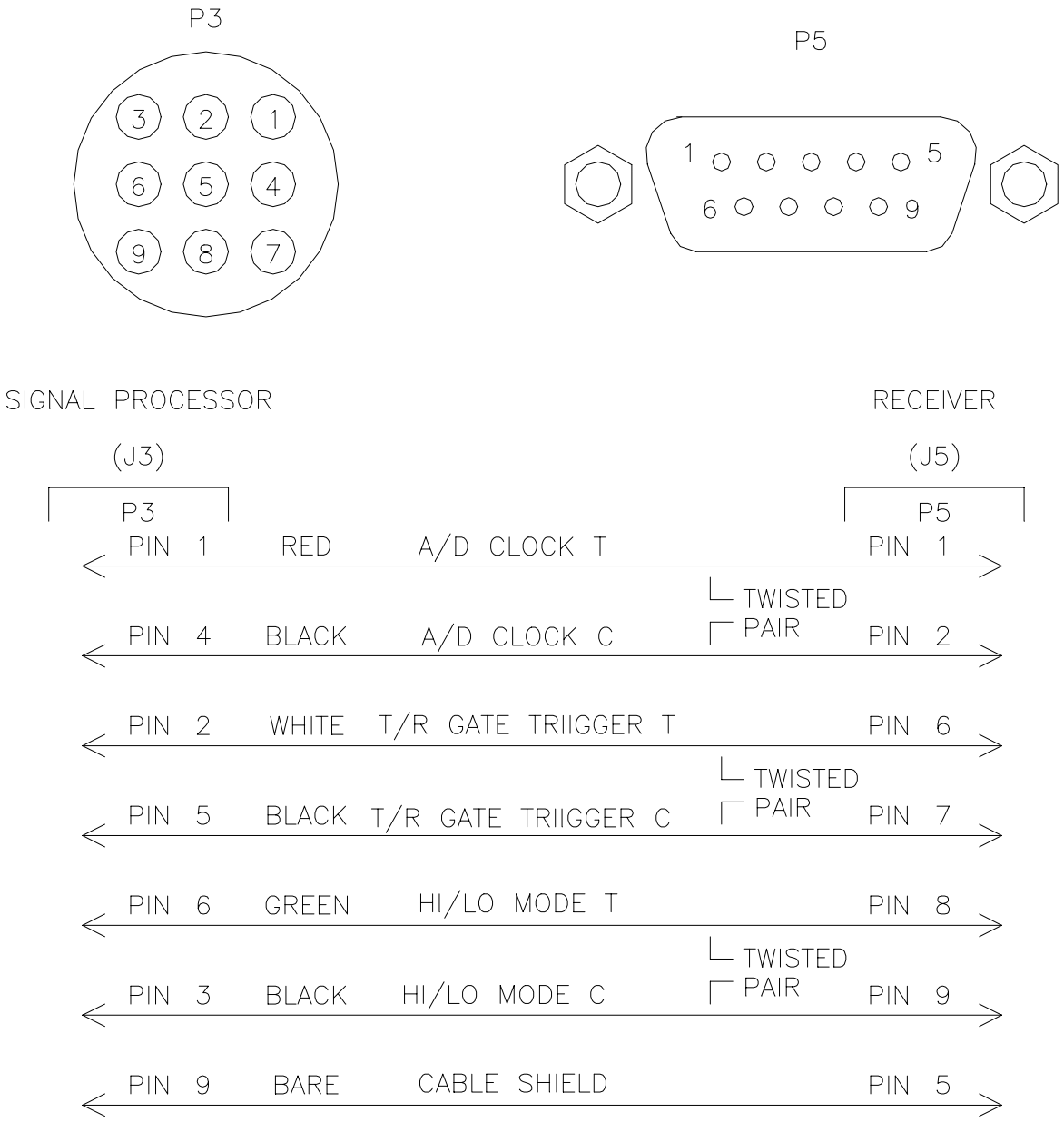

Figure A-2 Cable W1 Wiring Diagram (Signal Processor to Receiver)

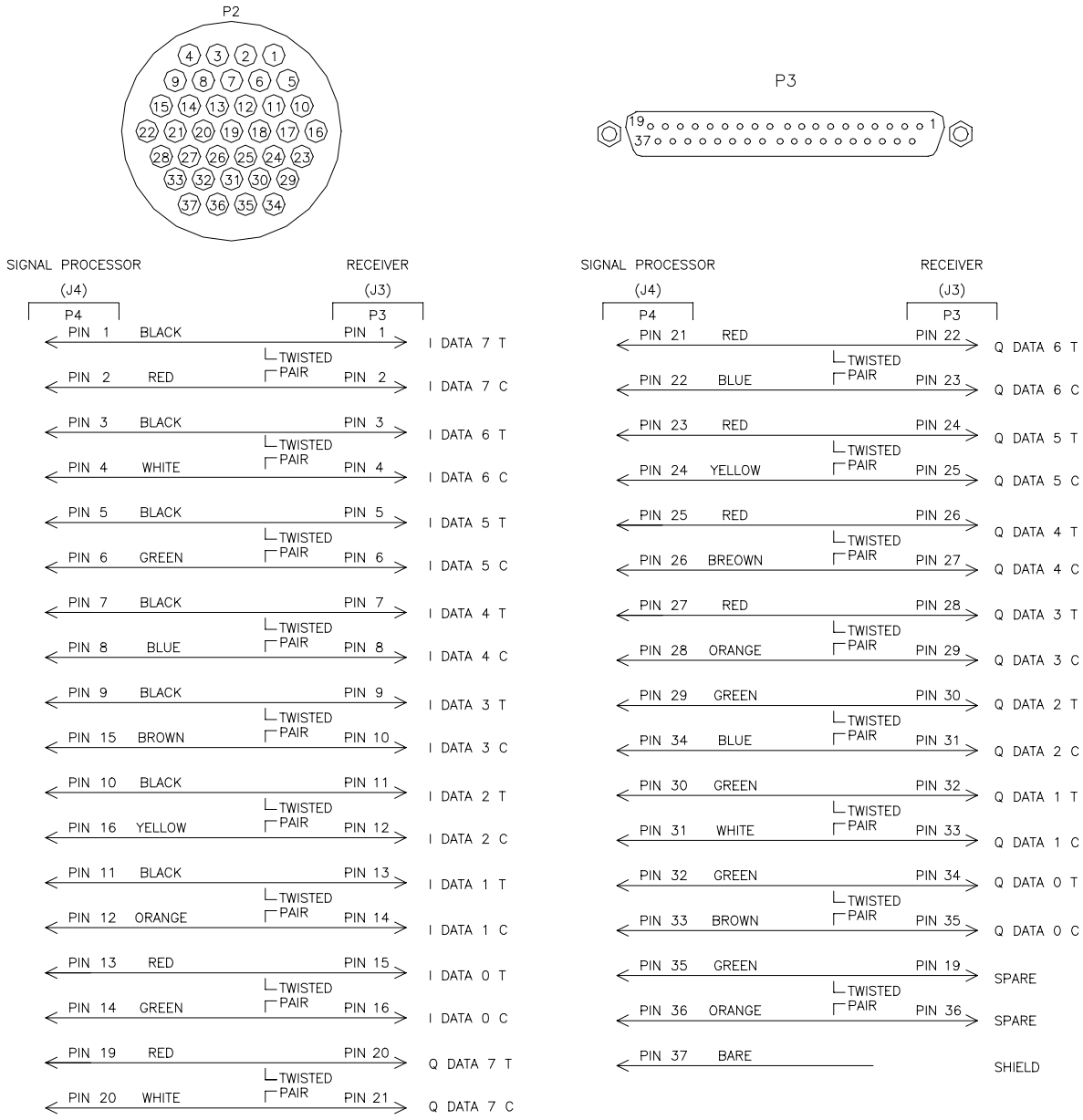

Figure A-3 Cable W2 Wiring Diagram (Signal Processor to Receiver)

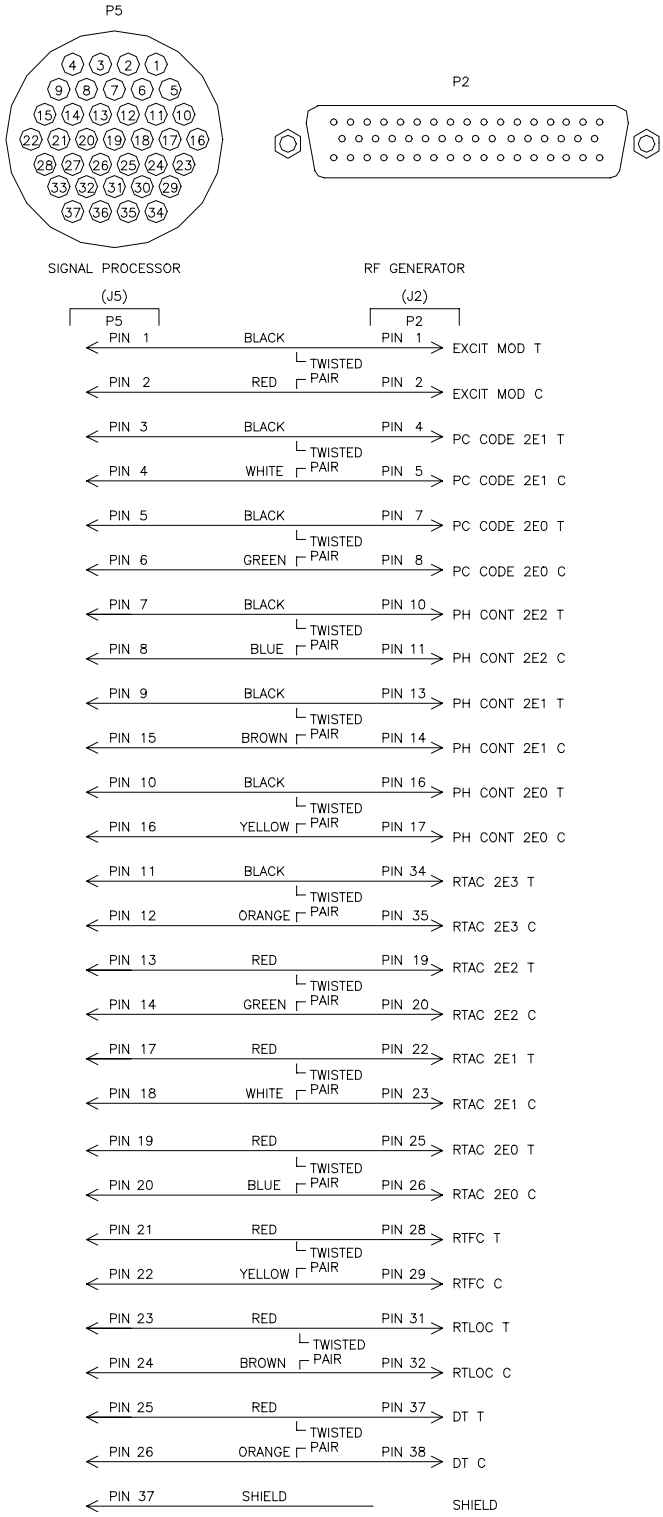

Figure A-4 Cable W3 Wiring Diagram (Signal Processor to RF Generator)

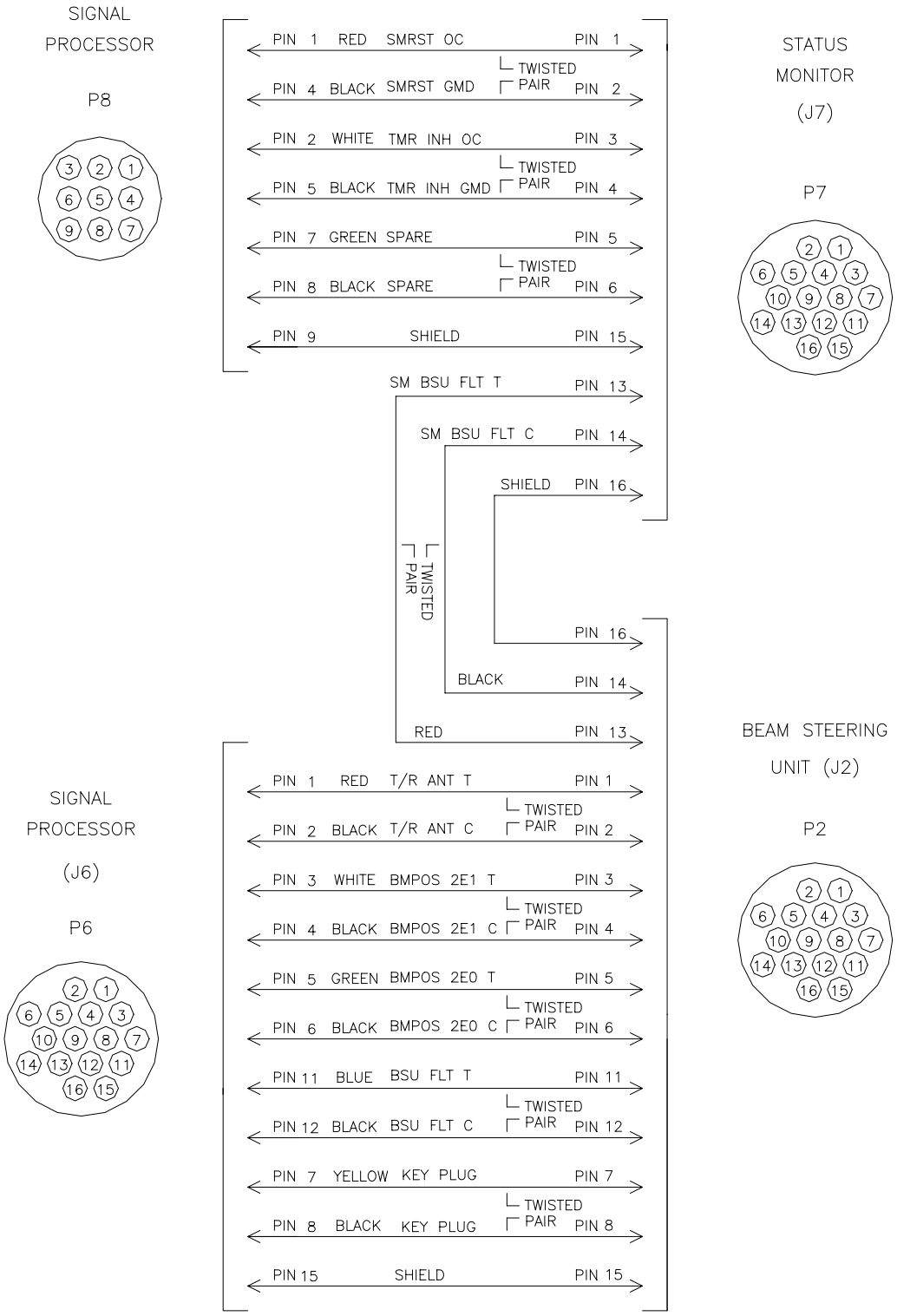

Figure A-5 Cable W4 Wiring Diagram (Signal Processor to BSU)

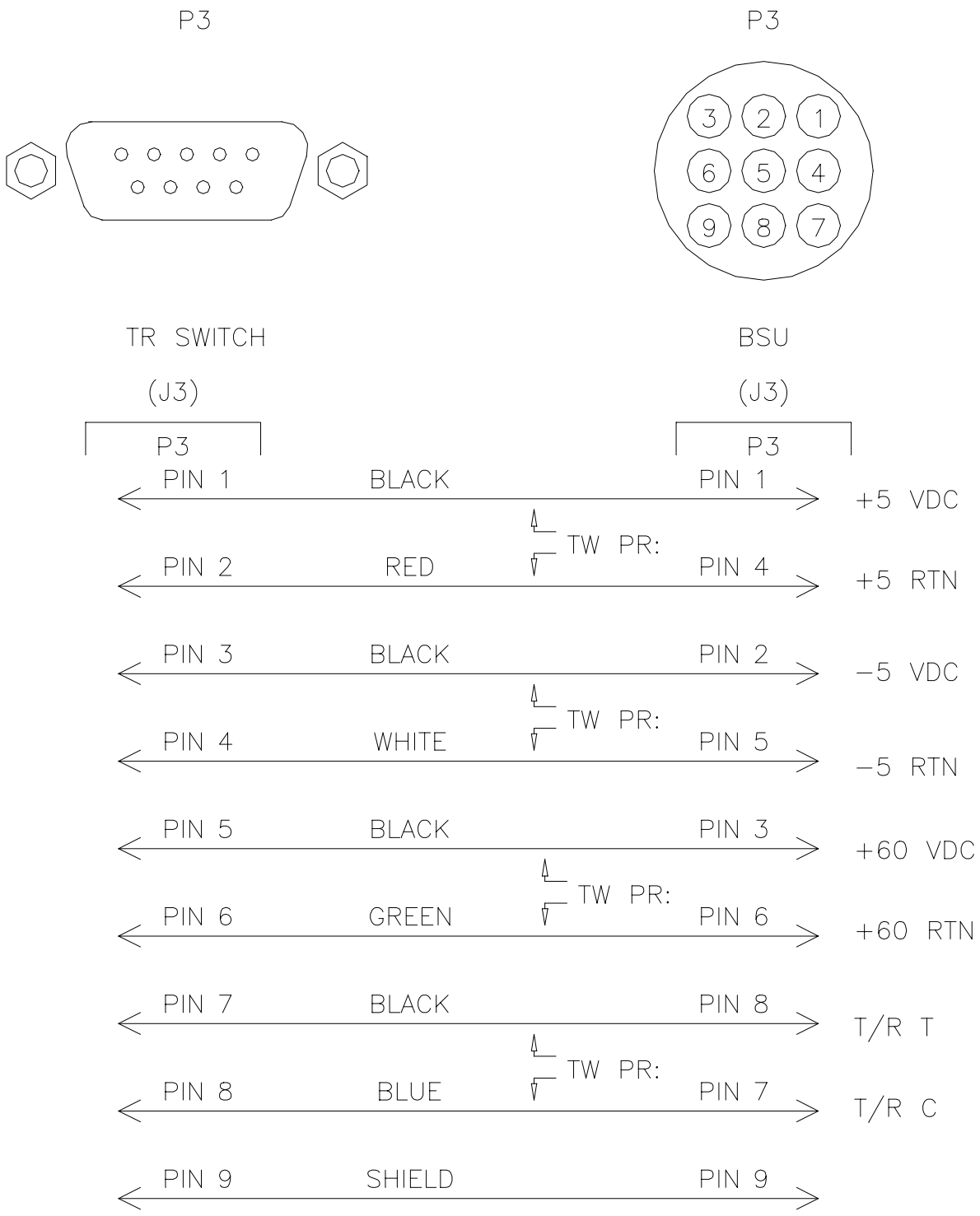

Figure A-6 Cable W5 Wiring Diagram (BUS to T/R Switch)

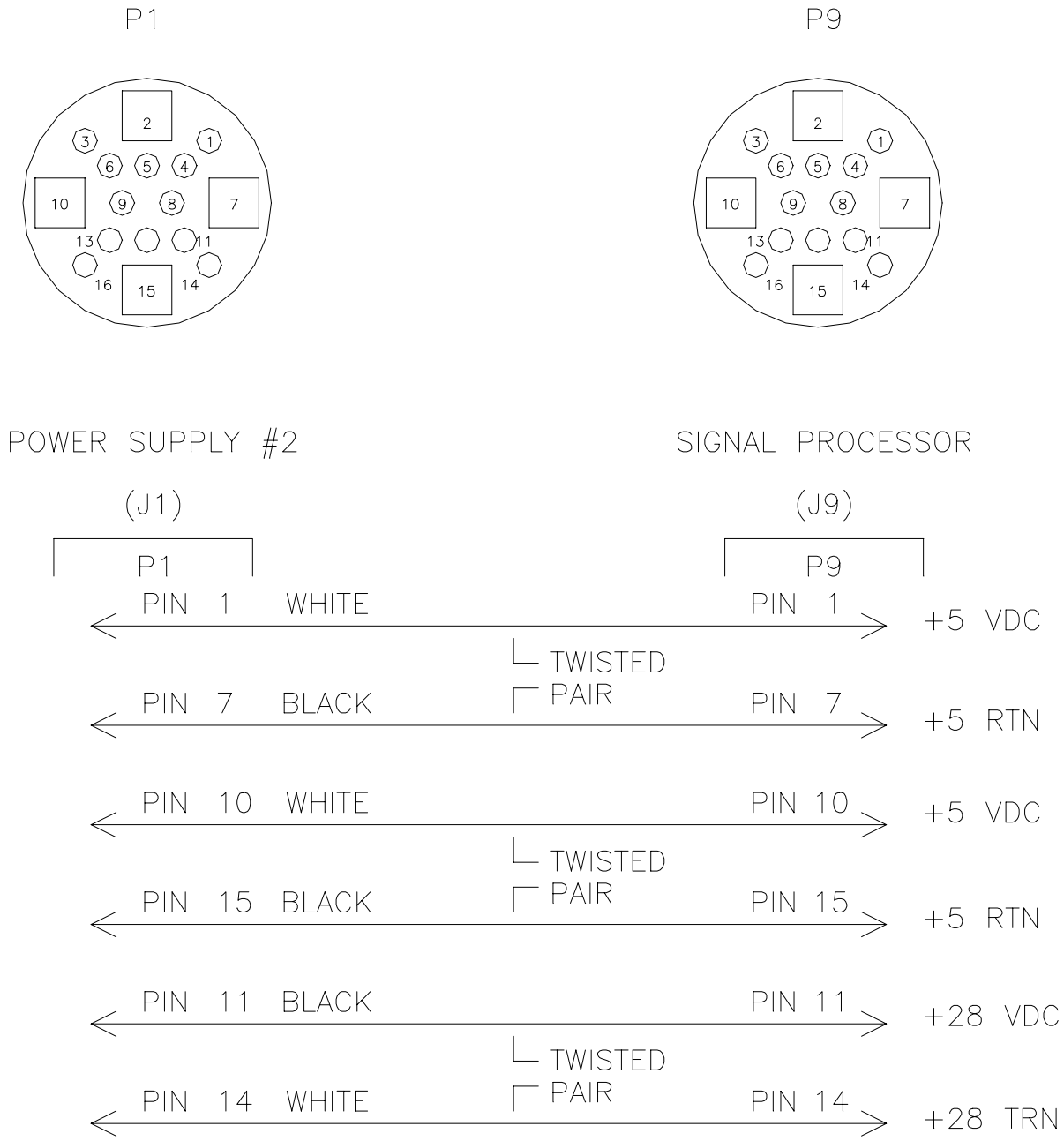

Figure A-7 Cable W6 Wiring Diagram (PS # 2 to Signal Processor)

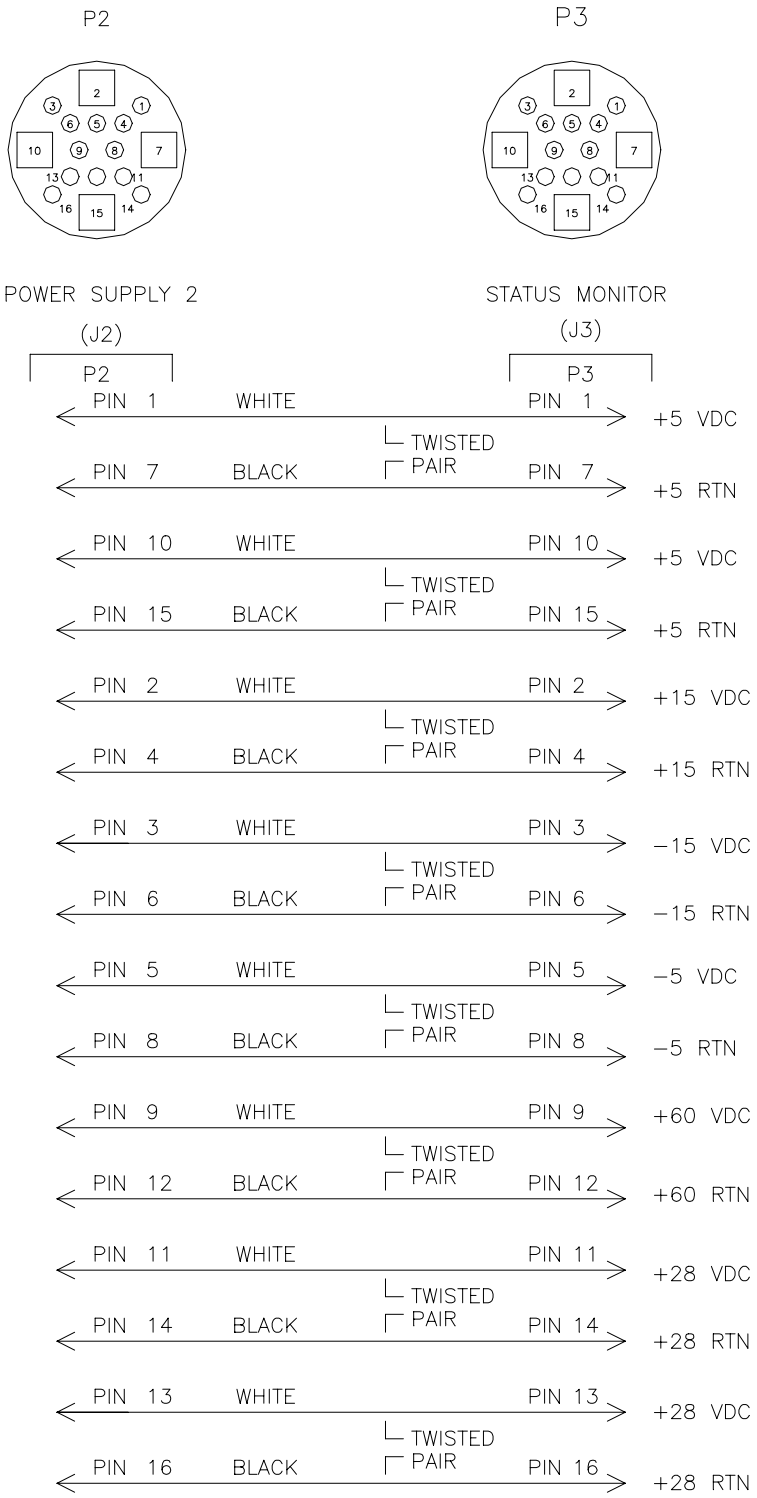

Figure A-8 Cable W7 Wiring Diagram (PS #2 to System Status Monitor)

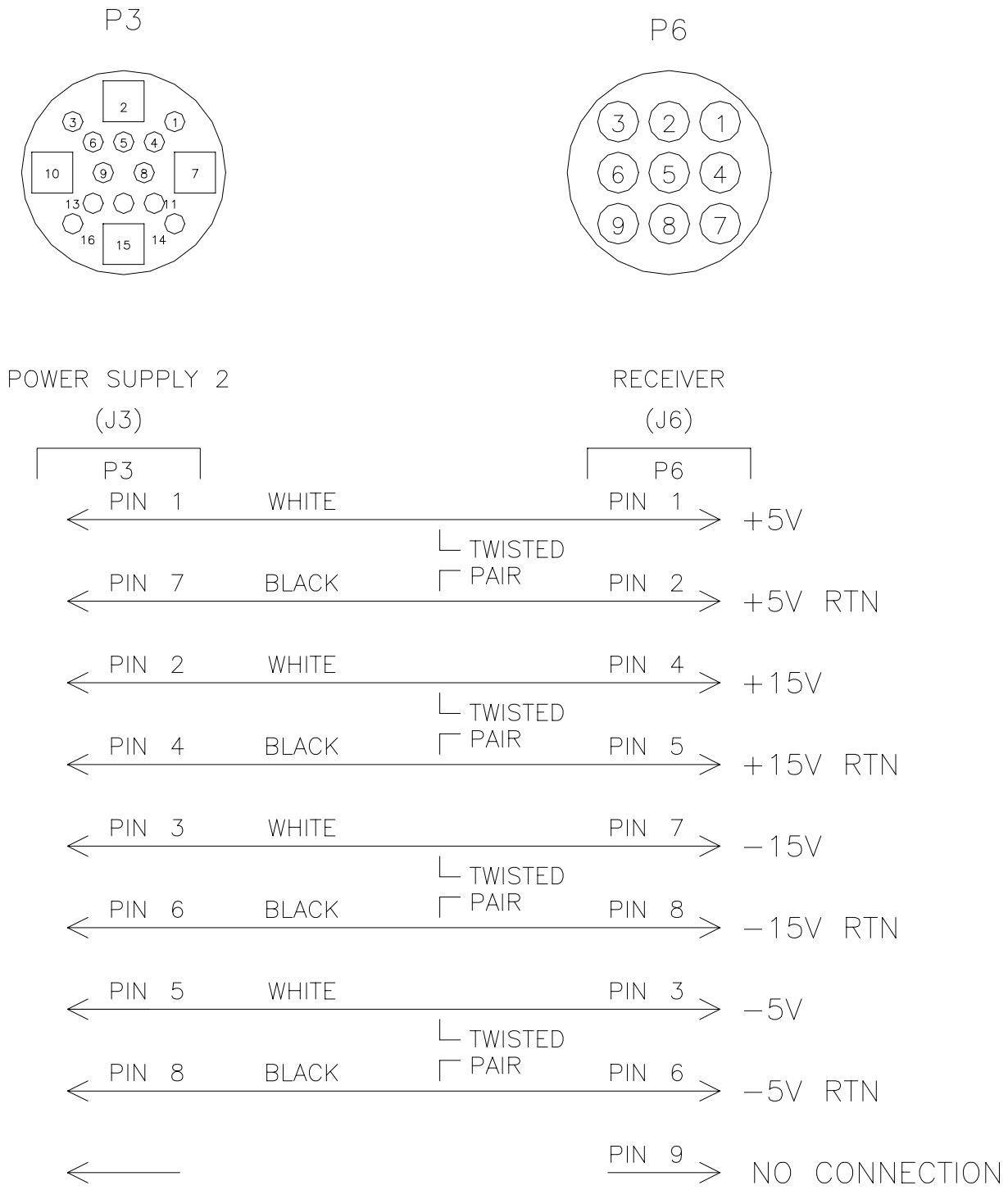

Figure A-9 Cable W8 Wiring Diagram (PS #2 to Receiver)

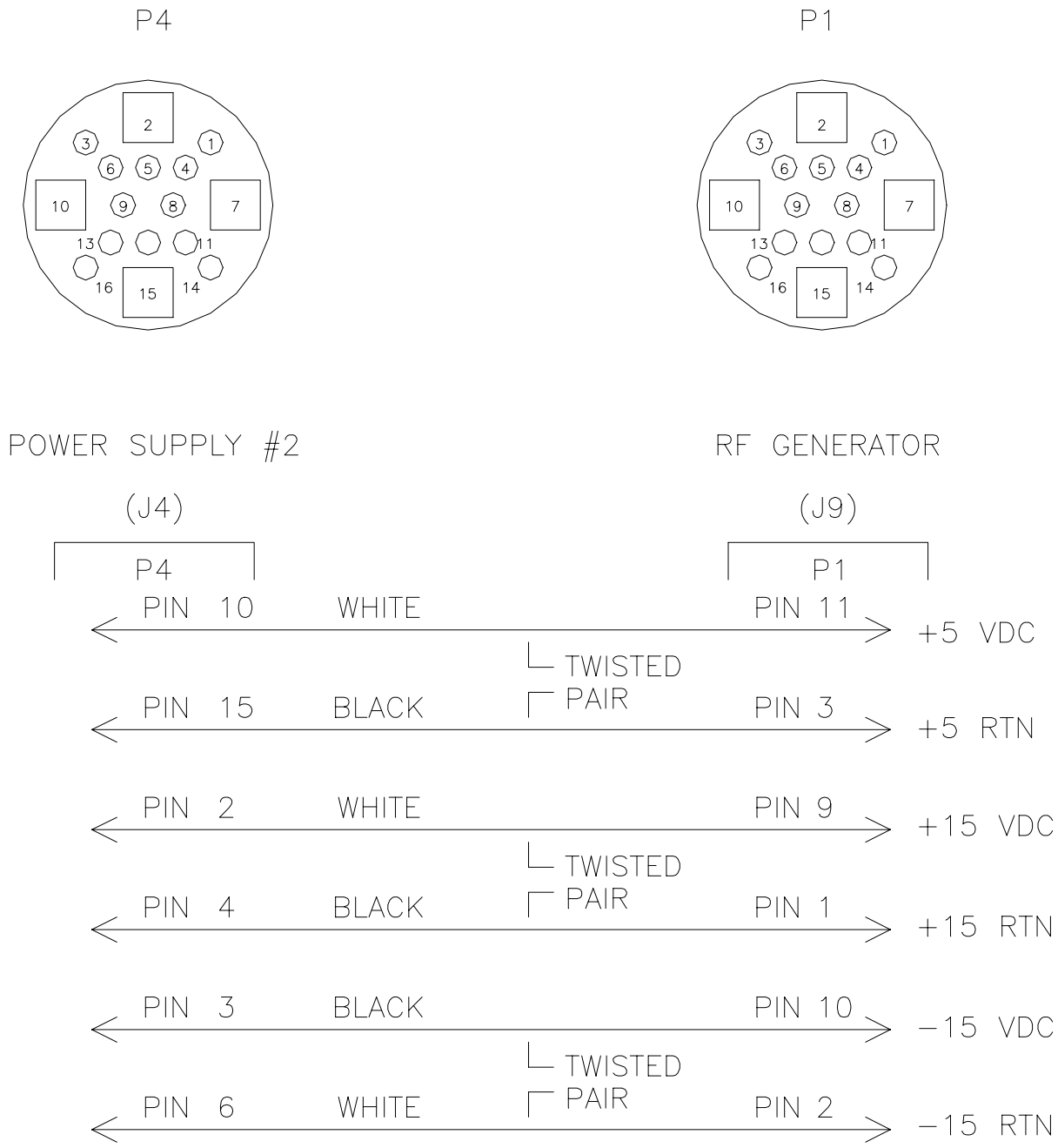

Figure A-10 Cable W9 Wiring Diagram (PS #2 to RF Generator)

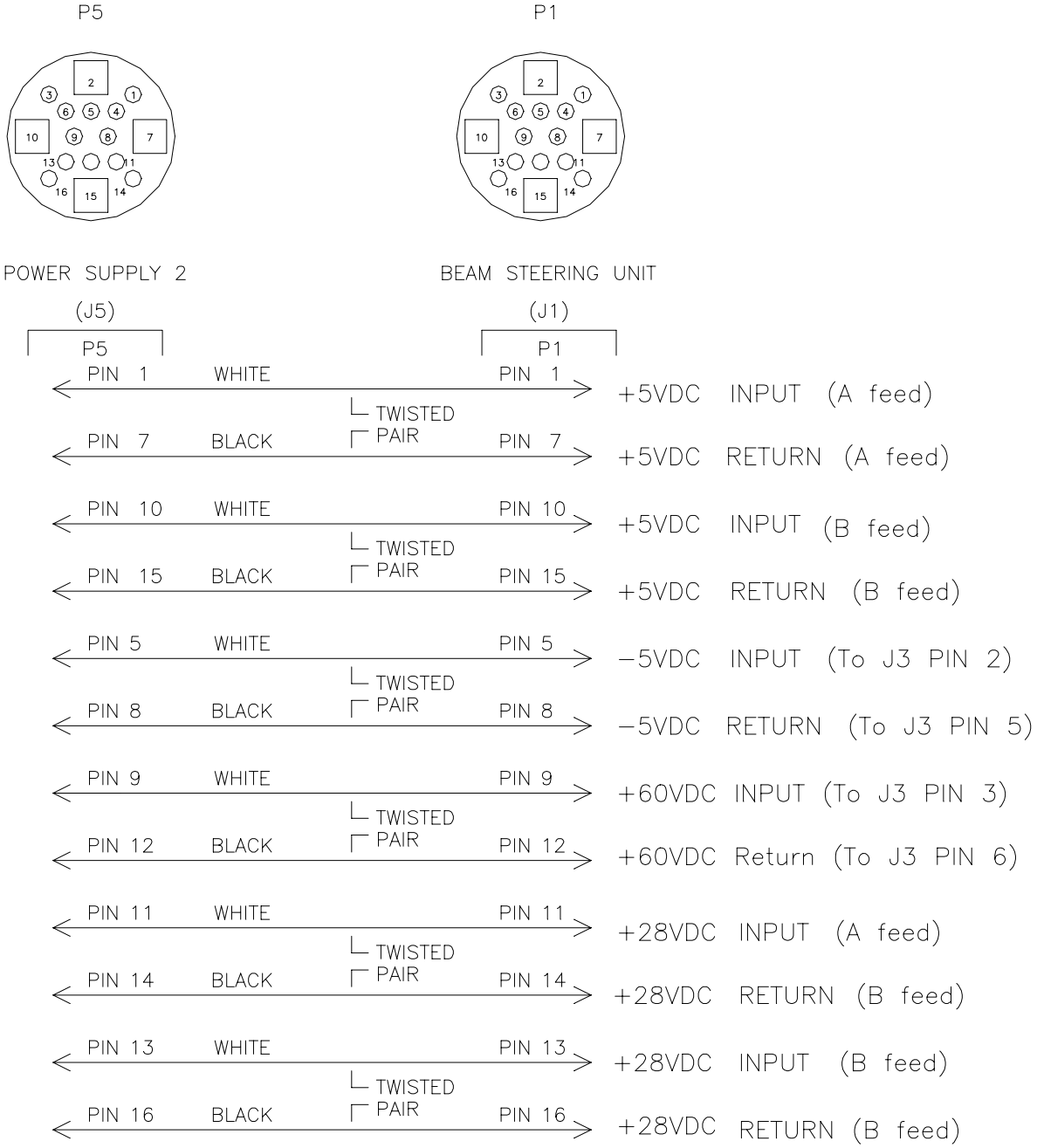

Figure A-11 Cable W10 Wiring Diagram (PS #2 to BSU)

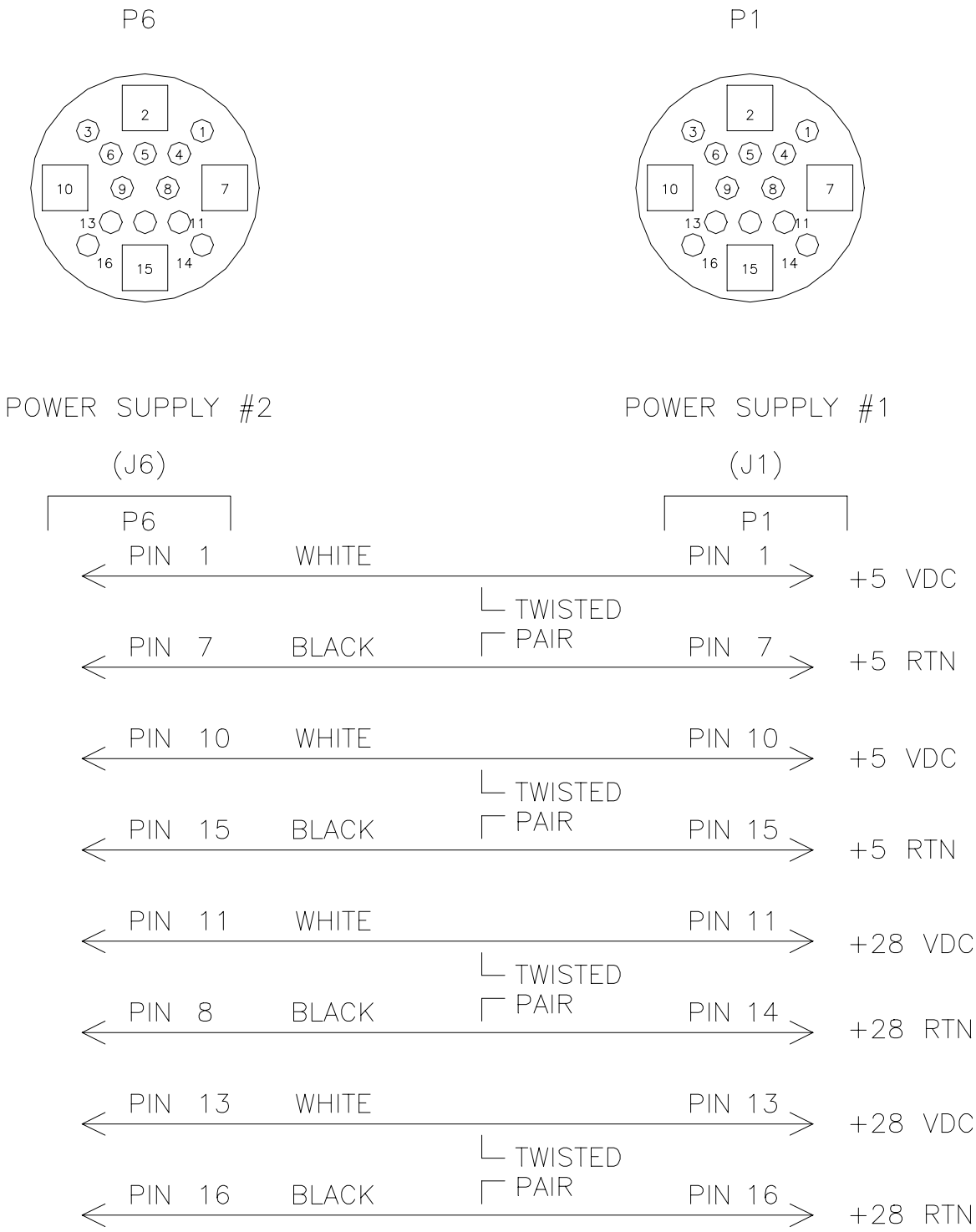

Figure A-12 Cable W11 Wiring Diagram (PS #1 to PS #2)

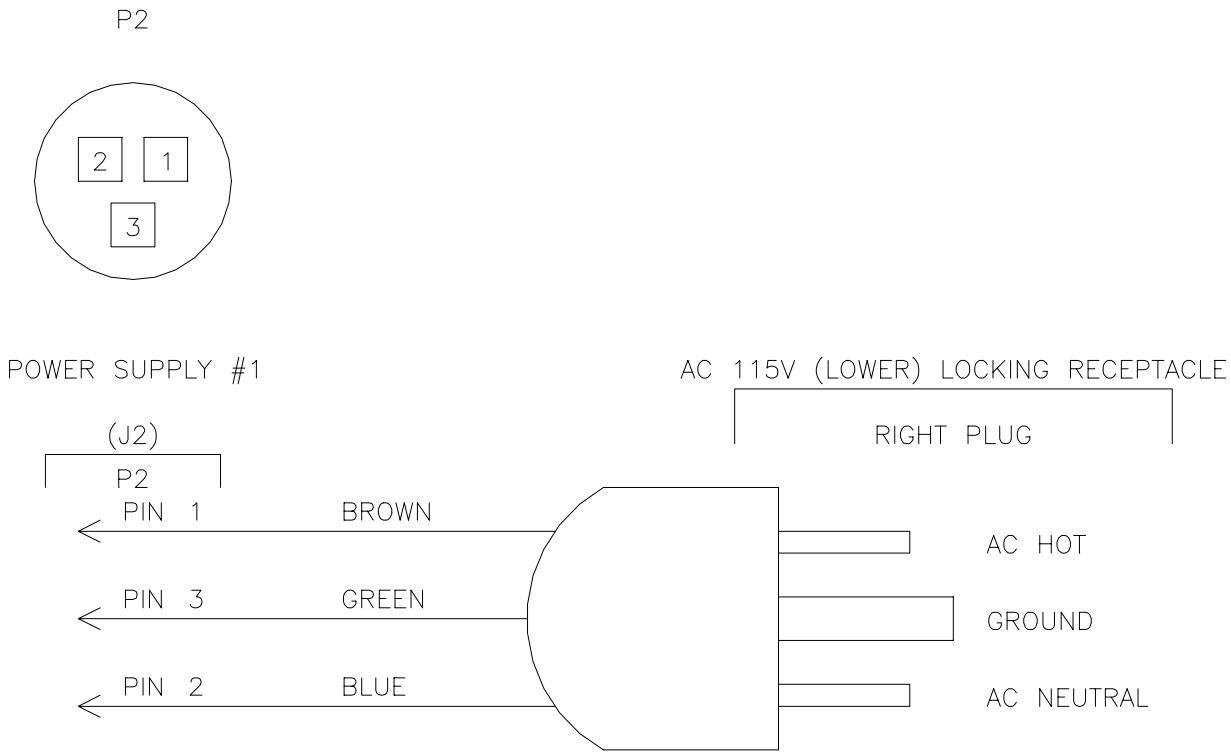

Figure A-13 Cable W12 Wiring Diagram (AC Line Voltage for PS #1)

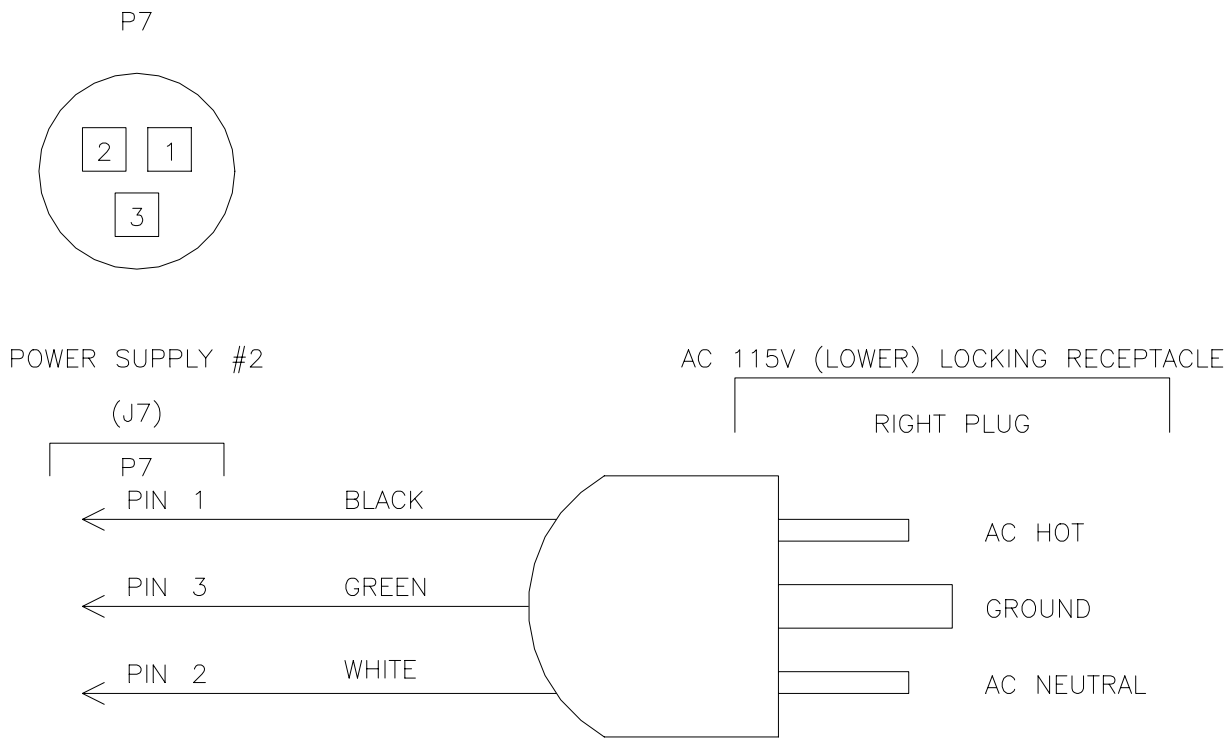

Figure A-14 Cable W13 Wiring Diagram (AC Line Voltage for PS #2)

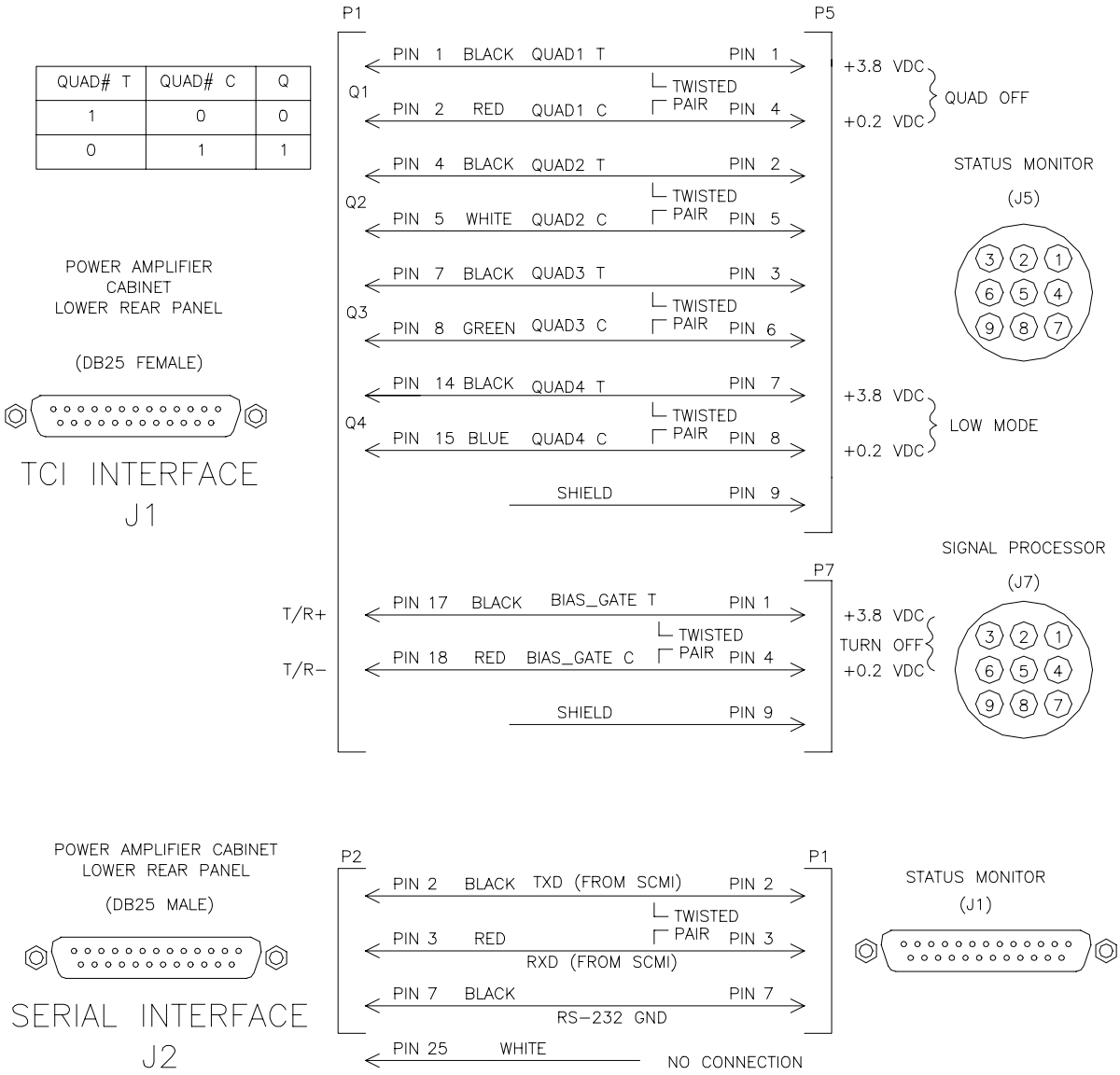

Figure A-15 Cable W14 Wiring Diagram (SP and SSM to Transmitter)

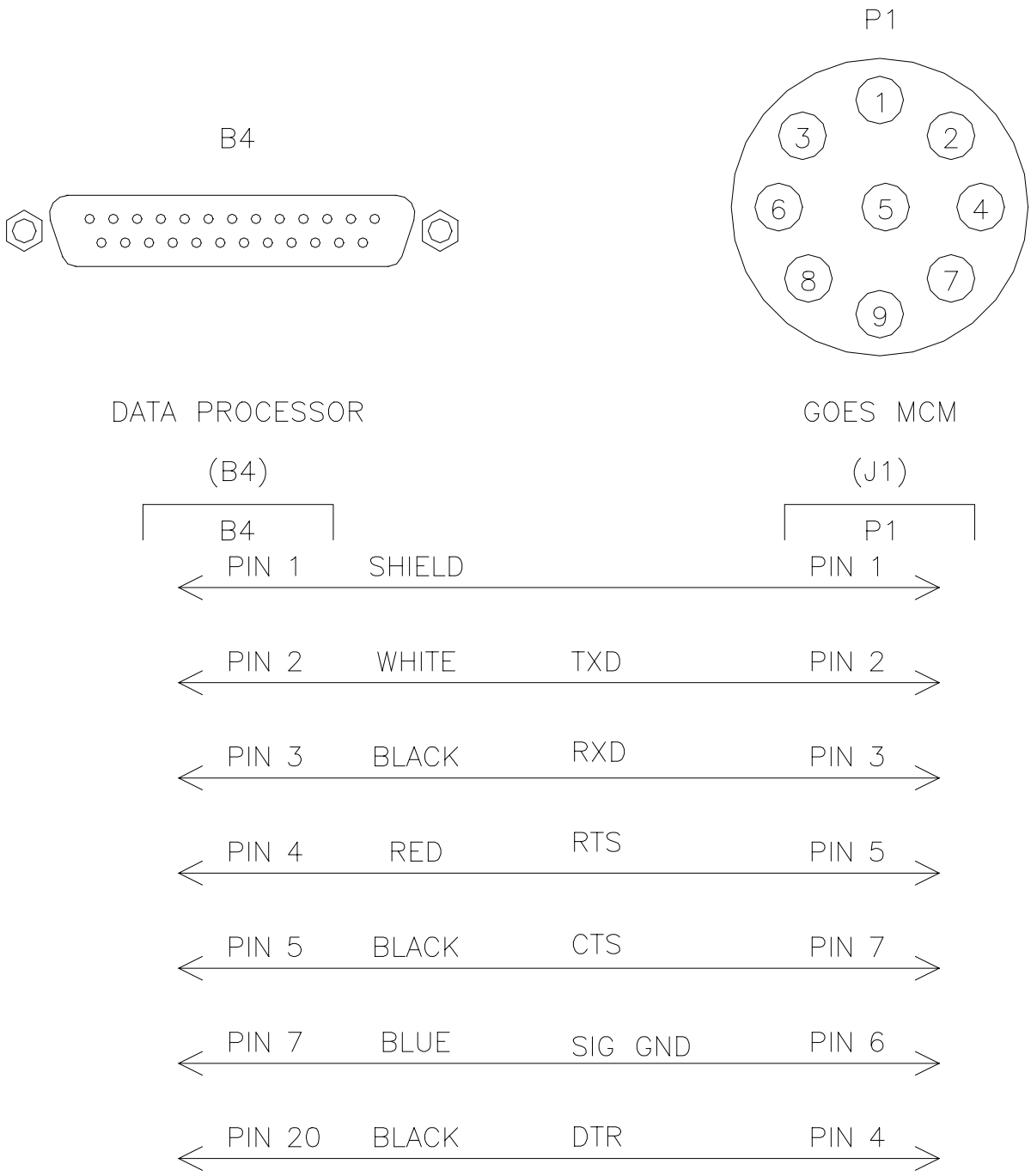

Figure A-16 Cable W15 Wiring Diagram (Data Processor tot GOES MCM)

APPENDIX B Site Visit Checklist

Standard Procedures for Site Visits and LRU Replacement

THIS PAGE INTENTIONALLY LEFT BLANK

1. Contact the Profiler Control Center (PCC) at (303) 497-6033 when you first enter the profiler shelter.

2. Verify that a replaced LRU is functioning correctly and the Profiler Hub is receiving data from the site by contacting the PCC after the unit has been installed and the site has been brought back on-line.

3. Provide the PCC with the serial numbers of the new and old LRUs, and include the manufacturer's model number and serial number, if available.

4. When you are ready to leave the site:

   a. Remove all jumper cables that may have been installed to disable shelter access alarms.

   b. Advise the PCC that you are leaving the site.

   c. Unless instructed otherwise by the PCC, verify that the air conditioners and exhaust fan are set at their normal operating settings.

   d. Perform a 5-minute delayed shelter access reset and log off the PMT.

   e. Disconnect the PMT cable from the front panel of the System Status Monitor. Failure to do so will eventually cause the Data Processor software to "hang-up" and effectively shut down the profiler. If the software "hangs", another site visit will be necessary to correct the problem.

   f. Unplug the PMT AC power cord from the wall outlet.

5. To lock the shelter the door, rotate the door handle from the "6 o'clock" position to the "9 o'clock" position and back again to fully engage the locking mechanism.

THIS PAGE INTENTIONALLY LEFT BLANK

APPENDIX C Acronyms and Abbreviations

Commonly used Acronyms used in the context of this document

THIS PAGE INTENTIONALLY LEFT BLANK

Table 1:

Acronym	Definition
AC	Alternating Current
A/D	Analog to Digital
AES	Area Electronic Supervisors
BSU	Beam Steering Unit
CFE	Contractor Furnished Equipment
COHO	Coherent Oscillator
DC	Direct Current
DIP	Dual In-line Package
DP	Data Processor
DSU	Data Service Unit
DTR	Data Terminal Ready
DVM	Digital Volt Meter
EEPROM	Electrically Erasable Programmable Read-Only Memory
ECU	Environmental Control Unit
EFTC	Exhaust Fan Temperature Controller
EL-TECH	Electronics Technician
EPROM	Erasable Programmable Read-Only Memory
ERL	Environmental Research Laboratories
ESA	Electronic Systems Analysts
FFT	Fast Fourier Transform
FSL	Forecast Systems Laboratory
GPS	Global Positioning System
GSOS	GPS Surface Observing System
HPA	High Power Amplifier
LO	Local Oscillator

Table 1:

Acronym	Definition
LRU	Line Replaceable Unit
MARS	Meteorological Acquisition and Reporting System
MCM	Master Control Module
NLSC	National Logistics and Support Center
NOAA	National Oceanic and Atmospheric Administration
NPN	NOAA Profiler Network
NRC	National Reconditioning Center
NWS	National Weather Service
NWSTG	National Weather Service Telecommunications Gateway
PA	Power Amplifier
PCC	Profiler Control Center
PMT	Profiler Maintenance Terminal
PPO	Profiler Program Office
PSOS	Profiler Surface Observing System
RAM	Random Access Memory
RASS	Radio Acoustic Sounding System
RF	Radio Frequency
SARSAT	Search and Rescue Satellite
SBC	Single Board Computer
SPST	Single Pole-Single Throw
SSM	System Status Monitor
SIM	Serial Interface Monitor
STC	Sensitivity Time Control
T/R	Transmit/Receive
TTL	Transistor-Transistor Logic
TVSS	Transient Voltage Surge Suppressor

Table 1:

Acronym	Definition
UPS	Uninterruptible Power Supply
VAC	Volts Alternating Current
VDC	Volts Direct Current
VSWR	Voltage Standing Wave Ratio

THIS PAGE INTENTIONALLY LEFT BLANK